CARLISLE

Power Transmission Products, Inc.

Industrial V-Belt Drives Design Guide

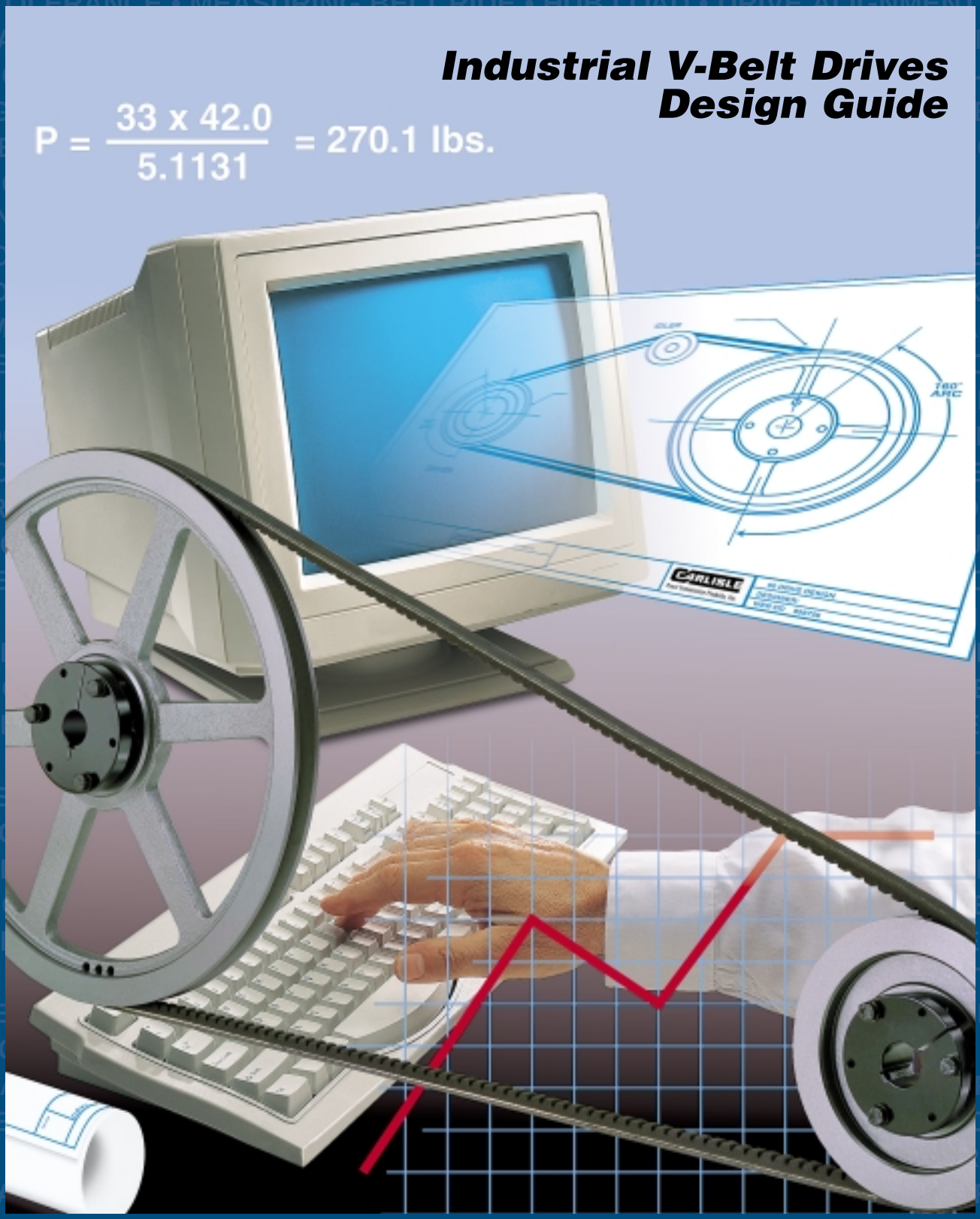

SAFETY NOTE ⚠ WARNING

FAILURE TO FOLLOW RECOMMENDED APPLICATION INFORMATION AND RECOMMENDED PROCEDURES FOR INSTALLATION, CARE, MAINTENANCE AND STORAGE OF PRODUCTS MAY RESULT IN FAILURE TO PERFORM PROPERLY AND MAY RESULT IN DAMAGE TO PROPERTY AND SERIOUS BODILY INJURY. MAKE SURE THAT PRODUCT SELECTED FOR ANY APPLICATION IS RECOMMENDED FOR THAT SERVICE.

APPLICATION INFORMATION IS GIVEN WITH THE PRODUCTS LISTED IN THIS CATALOG. REFER TO THE SAFETY AND TECHNICAL DATA SECTIONS OF THIS CATALOG FOR INFORMATION REGARDING SAFETY,CARE, MAINTENANCE AND STORAGE OR CONTACT CARLISLE OR YOUR CARLISLE DISTRIBUTOR FOR ASSISTANCE OR SPECIFIC RECOMMENDATIONS.

CARLISLE LIMITED WARRANTY

Products manufactured by Carlisle are warranted to be free from defects in material and workmanship under normal operating conditions of recommended usage for a period of 12 months after shipment. Carlisle's liability under this warranty is limited to the purchase price or, at its option, the repair or replacement of any product which is determined by Carlisle to its satisfaction to be defective upon return to Carlisle, transportation charges prepaid, with Carlisle's prior written authorization. This warranty does not apply to any product which has been improperly installed, maintained, or has been subjected to improper operation or use.

EXCEPT AS EXPRESSLY STATED ABOVE, CARLISLE MAKES NO WARRANTY, EXPRESS OR IMPLIED, WHETHER OF MERCHANTABILITY OF FITNESS FOR ANY PARTICULAR PURPOSE OR USE OR OTHERWISE OF THE PRODUCTS, OR ON ANY PARTS OR LABOR FURNISHED DURING THE SALE, DELIVERY OR SERVICING OF THE PRODUCTS. IN NO EVENT SHALL CARLISLE BE LIABLE TO BUYER FOR ANY SPECIAL, INDIRECT, INCIDENTAL OR CONSEQUENTIAL DAMAGES ARISING OUT OF, OR AS THE RESULT OF, THE SALE, DELIVERY, SERVICING, USE OR LOSS OF USE OF THE PRODUCTS OR ANY PART THEREOF, OR FOR ANY CHARGES OR EXPENSES OF ANY NATURE INCURRED WITHOUT CARLISLE'S WRITTEN CONSENT. IN NO EVENT SHALL CARLISLE'S LIABILITY UNDER ANY CLAIM MADE BY BUYER EXCEED THE PURCHASE PRICE OF THE PRODUCTS IN RESPECT OF WHICH DAMAGES ARE CLAIMED, EVEN IF CARLISLE HAS BEEN PROVIDED WITH NOTICE OF POTENTIAL LOSS.

V-BELT HISTORY

The V-belt has been in existence since the early 1920's. Through the years, vast improvements have been made in the materials used in V-belt construction and in cross sectional shape as well. Originally, V-belts came into being to replace the flat and round belts on automotive drives to ensure greater reliability. In 1930, Mr. Geist of Allis Chalmers, obtained patents on the use of V-belts in multiple for industrial usage, which led to a very broad application of V-belts on all types of industrial equipment. The use of V-belts in multiple, allowed drives with a much larger range of horsepower capacity than ever before obtainable using single belt drives. Originally, standardization of V-belts began under the technical committee of licensees under the Geist patent. This committee was replaced in 1940, by an industry committee, established by the Rubber Manufacturers Association on V-belt Standardization. The first RMA standard was established in 1949, on the A,B,C,D and E section belts. Today, the Rubber Manufacturers Association have established standards on all types of V-belts which are recognized internationally. These standards have been adopted by all standardizing bodies such as the API, ASAE, SAE and the International Standards Organization.

Originally, V-belts were manufactured using prime quality cotton cord as tensile members along with natural rubber compounds. These materials were used on V-belts up to and during most of World War II. Steel Cable was introduced as a V-belt reinforcing member during World War II. Later, high tenacity Rayons replaced cotton as tensile members because of their much greater strength capacity. In addition to this, the SBR synthetic type of rubbers which were also developed during the war, were incorporated into V-belt constructions. Due to the deficiencies of both cotton and rayon tensile members, experimentation was carried on with Nylon fibers, however these never gained wide acceptance because of operational problems and today, polyester, fiberglass and aramid fibers are the predominant tensile members on all high capacity V-belts. In addition to polyester tensile members, the Neoprene type of elastomers have become widely used because of their much greater resistance to oil, heat, and ozone resistance.

In addition to changes in materials, changes in belt cross-sections have occured to obtain greater horsepower in less space. This was originally introduced with the "narrow" type belt on cars in 1950. This more efficient, space saving design was further refined for industrial use with the introduction of 3V,5V and 8V belts in 1959. This new cross section design featured a domed top with increased sidewall area, providing greater horsepower capacity in less space. More recently Joined, V-Ribbed and Raw Edge belting have gained widespread acceptance.

COMPANY HISTORY

1905 Dayton Rubber Mfg. Co, (DRMC) founded in Dayton, Oh.
1917 Carlisle Tire & Rubber Company founded In Carlisle, PA
1921 DRMC builds raw edge V-belt.
1926 DRMC builds the first cog type belt.
1946 DRMC becomes Dayton Rubber Co. (DRC).
1934 DRMC manufacturers first synthetic rubber automobile tire.
1941 DRMC manufacturers vehicle tires, rubber rafts, tank tread rollers, and oxygen hose to army
1946 Company name changes to Dayton Rubber Company. (DRC)
1948 DRC announces first commercial development of "cold" synthetic rubber
1956 DRMC perfects Super Thorobred® V-belts with Dacron®
1957 DRMC develops arched cross-section V-belt for
1959 DRMC developes arched cross-section V-belt for agricultural applications.
1960 Company name changes to Dayco Corp.
1964 Industrial Gold Label® Cog-Belt® introduced.
1973 Synchro-Cog® synchronous belt introduced
1985 Developes first full neoprene FHP v-belt.
1986 Dayco sold to Armtek
1987 Armtek bought bt Mark IV Industries.
1988 First high performance CVT belt.
1993 Acuires Pirelli Transmission Industrial S.p.A.
1993 Intoduces RPP Panther high performance synchronous belt.
1995 Introduces Super II classical v-belt line
2001 Carlisle acuires the Industrial PT division of Dayco, and becomes Carlisle Power Transmission.

1921: The largest size of the innovative raw-edge V-belt for use on a refrigeration unit.

V-BELT DRIVE ADVANTAGES

Efficiency tests of Carlisle multiple V-belt drives have shown them to be 94 - 98% efficient. Because of the wide variety of belt sizes available, almost any type of drive application can be designed using stock standard items. This ensures availability and excellent delivery schedules and if necessary, special constructions are available for unusual applications. Carlisle V-belt drives also provide many advantages that help reduce equipment repairs and hold forced downtime to the lowest possible level.

Other significant advantages include:

- Smooth starting and running.
- Permit a wide range of driven speeds, using standard electric motors.
- They're rugged and provide years of trouble-free performance with minimal attention . . . even under adverse conditions.
- Capable of transmitting power around corners or out of plane drives.
- Clean—require no lubrication.
- Highly efficient.
- Extremely wide horsepower ranges.
- Dampen vibration between driver and driven machines.
- Silent operation.
- Long service life.
- Easy installation.
- Can be used as an effective means of clutching.
- They act as a "safety fuse" refusing to transmit severe power overload, except for a very brief period.
- V-belts and sheaves wear gradually-making preventive corrective maintenance simple and easy.

PREFACE

This Engineering Guide encompasses the area of V-belt applications involving integral horsepower loads,which require the use of one or more “heavy duty” or “industrial” V-belts.

Generic Belt Type	Carlisle Trade Name	Cross-Section Designation
Narrow V-belts	Power-Wedge® Cog-Belt® Super Power-Wedge®	3VX,5VX,8VX 3V,5V,8V
Classical V-belts	Gold Ribbon™ Cog-Belt® Super Blue Ribbon®	AX,BX,CX,DX AP,BP,CP,DP
Banded V-belts	Wedge-Band® Gold ribbon™ Cog-Band® Super Vee-Band® Wedge-Band® Chipper Drive	R3V,R5V,R8V, R3VX,R5VX RBX,RCX,RDX RBP,RCP,RDP R5VL
Double-V	Double Angle	AA,BB,CC
Open-End	Connector Belting	A,B,C,D
Link (Segmented)	Thoro-Link®	O,A,B,C
High Performance Raw-Edge V-belt	Super II®	A,B,C
Agricultural	Aramax®	AK,BK,CK
Light-Duty Outdoor Power Equipment V-belt	Durapower® II XDV®	3L,4L,5L 38X,48X,58X
V-Ribbed	Vee-Rib™	J , L , M

Every effort has been made to make all information relevant to V-belt drive design available in an easy-to-use, convenient format. In addition, the “Special Engineering Information” section includes useful information for:

Speed-up drives	Connector belt drives
V-flat drives	Thoro-Link belt drives
Quarter Turn drives	Double Angle V-belt drives
Durapower II belt	

This section is also helpful when designing special drives using non-standard sheave diameters and includes information on tensioning,hub load,bearing load and flywheel effect.

Although the final drive design recommendation is always the responsibility of the designer, the decision regarding the optimum belt type to be used is often difficult.

In an effort to provide the designer with some guidelines as to type selection, the “Design Guide for Carlisle Industrial V-belts” on Page 5 is offered. Although the parameter ratings still involve a certain amount of subjectivity, this Design Guide should permit a more objective approach to responsible V-belt drive design. It may be photocopied to allow for personal marking,notes,etc. relative to the selection process.

When additional help from Carlisle application engineers is desired, the Drive Assistance Data form at the back (page 322) of this manual may be photo copied and submitted for computerized factory recommendation.

A NOTE ABOUT RATINGS

V-belt horsepower ratings may differ slightly among manufacturers. Since horsepower-hours is the real measurement of economical V-belt operation, product quality and manufacturing technology are important criteria.

Carlisle’s multi-million dollar Technical Center staffed by over 100 engineers, chemists, and technicians, assures the user that the Carlisle V-belts included in this manual will perform equal to or better than any other comparable belt, regardless of whose ratings are used in the original design.

Design Guide for Carlisle Industrial V-Belts

DRIVE PARAMETER OR CONDITION	Belt Type And Rating													
	V-Belt								Vee-Band			Special		
	SUPER POWER-WEDGE	POWER-WEDGE COG-BELT	SUPER BLUE RIBBON	GOLD RIBBON COG-BELT	Vee-RIB	DURAPOWER II	SUPER II	ARAMAX	WEDGE-BAND	SUPER VEE-BAND	GOLD RIBBON COG-BAND	DOUBLE ANGLE	CONNECTOR BELTING	THORO-LINK
General Ratings														
Normal HP Limit (x 100 HP)	10	10	5	5	5	.05	5	5	10	5	5	2	3	3
Normal Ambient Temp. Range (˚F) Min (-)	35	35	35	35	35	35	35	35	35	35	35	35	35	35
..... Max ①	130	130	120	130	130	120	130	130	130	120	130	120	120	130
Maximum Belt Speed (x 1000FPM) ②	6.5	6.5	6	6	6	6	6	6	6.5	6	6	5	4	5
Space Limitations														
Minimum face width	A	A	C	A	B	C	C	C	A	C	A	C	C	C
Extremely Long Centers	B	B	B	B	B	C	B	B	A	A	A	C	C	C
Extremely Short Centers	A	A	C	B	A	B	B	C	B	C	B	C	C	C
Small Sheave Diameters	B	A	C	A	A	B	B	C	A	C	A	C	X	C
Overall Compactness	A	A	C	B	A	C	C	C	A	C	C	C	X	C
Light Weight Drive	B	A	C	B	A	B	C	C	A	C	B	C	C	C
No Take-Up Non-Std. Length	X	X	X	X	X	X	X	X	X	X	X	X	B	A
Design Factors														
Backside Idler	C	X	B	B	B	B	B	B	X	C	B	C	X	X
Clutching, Overload Slip ③	C	B	B	X	C	C	B	B	B	B	X	C	X	X
Energy Efficiency	B	B	B	A	B	B	B	B	B	B	A	B	C	B
High Speed Ratio	B	A	C	B	A	B	B	C	A	C	B	C	X	C
Minimum Slip	C	B	C	A	B	C	B	C	B	C	A	C	C	C
Multi-Pitch Sheave	X	X	B	A	X	B	B	B	X	X	X	C	C	C
Machine Induced Pulsation	B	B	B	B	B	B	B	A	A	A	A	C	X	B
Quarter Turn Drive	B	C	B	X	X	C	C	C	X	X	X	X	X	C
Serpentine Drive	X	X	X	X	A	X	X	X	X	X	X	A	X	X
Shock Loads	C	B	B	C	C	B	B	A	A	B	C	C	X	C
Small Arc of Contact	C	B	C	A	A	B	B	C	C	C	A	C	X	C
Speed-Up Drive	B	A	B	A	A	B	B	B	A	B	A	C	C	C
Vee-Flat Drive (No Crown)	C	X	B	B	B	B	B	B	B	B	B	X	C	X
(Crown)	X	X	B	B	X	B	B	X	X	X	X	X	C	X
Environmental Conditions														
Chemicals, Ozone ③	B	A	B	A	A	A	A	B	A	B	A	C	C	C
Dust, Abrasives	B	B	C	A	A	C	B	B	B	C	A	C	C	C
Excessive Heat	B	A	C	A	B	B	A	A	A	C	A	C	C	C
Excessive Moisture	B	A	C	A	A	A	A	B	A	C	A	C	X	C
Excessive Oil, Grease	B	A	B	A	A	B	A	B	A	B	A	B	C	C
Inaccessible for Maintenance	C	B	C	A	B	C	B	C	B	C	A	C	C	C
Static Dissipation	A	B	B	A	X	X	X	X	B	B	A	X	X	X

Key to Ratings: A - Excellent
B - Satisfactory
C - Use only if necessary to meet other conditions
X - Not recommended
① - Expect little or no life loss from heat
② - Normally limited by sheave materials
③ - May require special construction if severe

Carlisle's Full Power Transmission Line

1 ***Power-Wedge® Cog-Belt®** (3VX,5VX,8VX)
Space saving V-Belt transmits higher HP and gives longer life for maximum savings.

2 ***Super Power-Wedge® V-Belt** (3V, 5V,8V)
Designed for lower cost, more compact multiple-belt drives.

3 **Wedge-Band®** (R3V,R5V,R8V,R3VX,R5VX,R8VX)
Carlisle's Power-Wedge belt in banded design. Eliminates whip and turnover on narrow drives.

4 **Wedge-Band® Chipper Drive Belt** (R5VL)
Specially designed and constructed to meet the unique demands of the forest products industry. Ideally suited for chipper saws, debarker drives, head rigs and hogs.

5 **Variable Speed Cog-Belt®** (1228V through 6136V Series)
Carlisle Variable Speed Cog-Belt offers the same high standard of quality in a replacement belt that Carlisle provides to the OEM.

6 ***Super Blue Ribbon® V-Belt** (AP,BP,CP,DP)
The finest wrapped belt in the industry.

7 ***Super II™ V- Belt** (A,B,C)
The revolutionary raw-edge® belt from Carlisle that blows the cover off conventional wrapped belts due to its unique construction.

8 **Super Vee-Band ®** (RBP,RCP,RDP) Carlisle's Super Blue Ribbon V-Belt in banded design. Eliminates belt whip and turnover on conventional drives.

9 **Gold Ribbon™ Cog-Belt®** (AX,BX,CX,DX)
The Energy Saver! More efficient than ordinary belts. The finest classical V-belt available.

10 **Gold Ribbon™ Cog-Band®** (RBX,RCX,RDX)
A unique combination of our energy saving Cog-Belt and the banded concept.

11 **Double-Angle Belt** (AA,BB,CC)
Designed for use on serpentine type drive applications.

12 **Vee-Ribbed Belt** (J,L,M)
Increased HP in 2/3 the space required for normal belts.

13 **Durapower® Light duty V-Belt** (3L,4L,5L)
Carlisle wrapped belt technology makes Durapower a real heavyweight in the light duty v-belt arena.

14 **Durapower® II (Raw Edge) FHP Light Duty V-Belt**
Longer belt life and improved performance.

15 **XDV® Xtra Duty V-Belt** (38X,48X,58X)
The XDV belt is designed for tough belt drives; typical of snowblowers, lawn mowers, garden tractors, tillers, etc. Cover fabric design is geared to optimize declutching capability for smooth and reliable transfer of power.

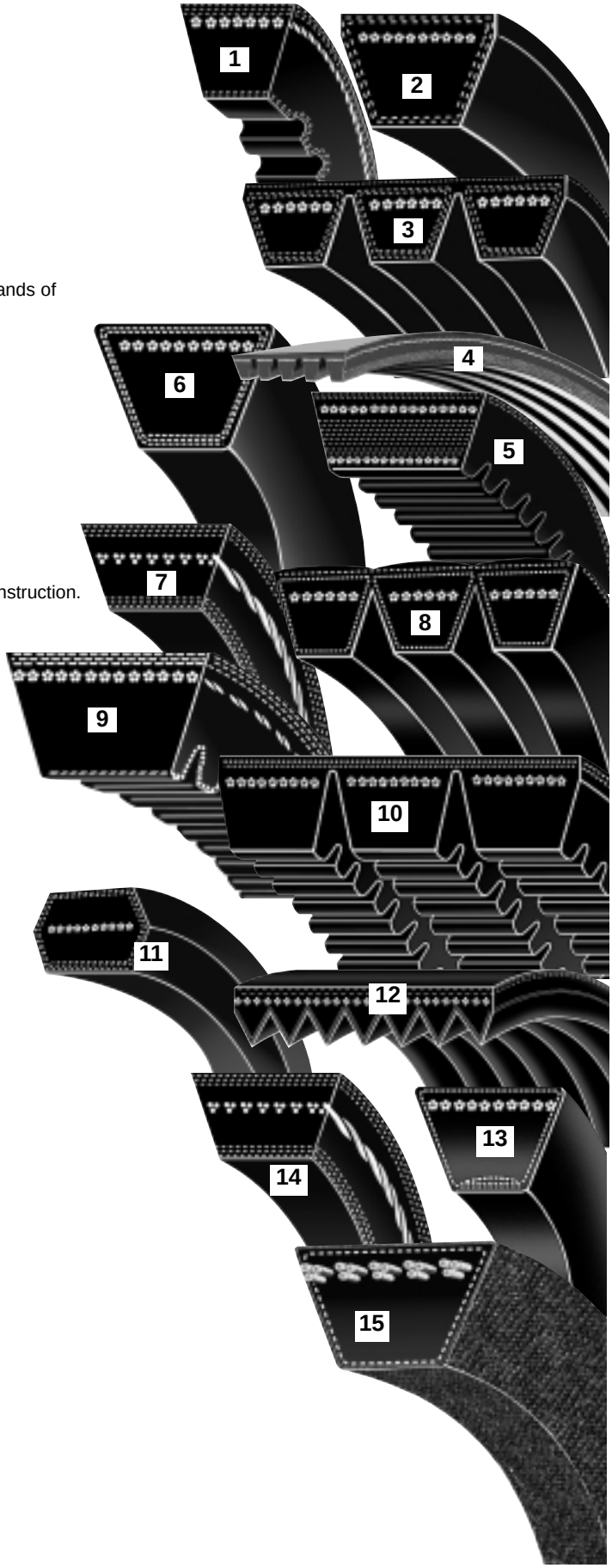

* available in chek-mate™ construction

Carlisle's Full Power Transmission Line (Cont.)

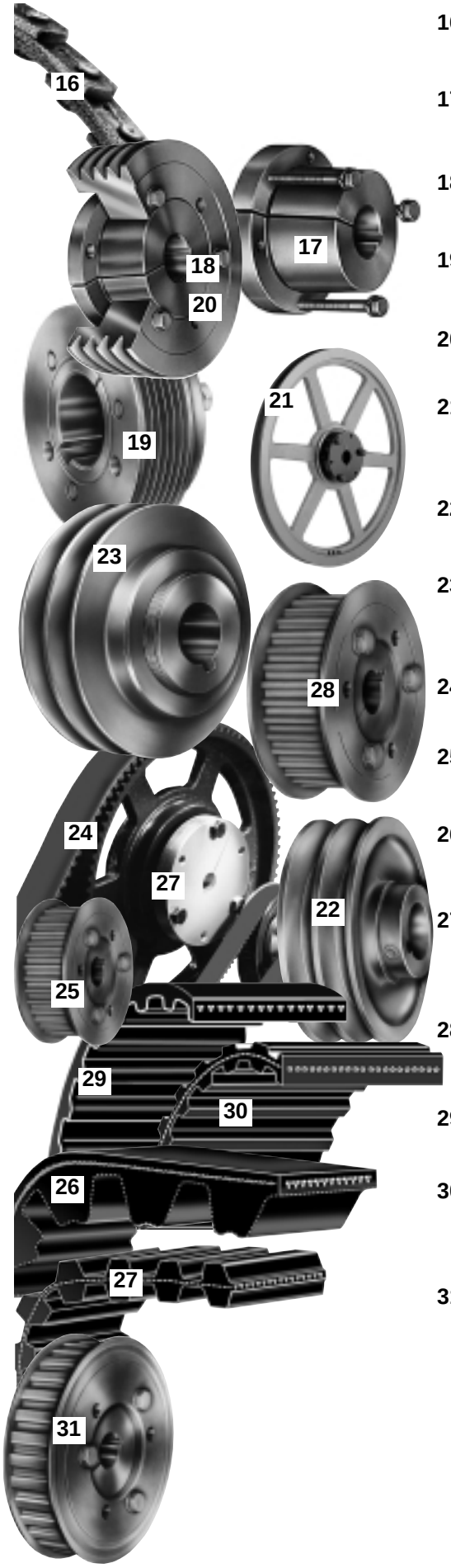

16 **Thoro-Twist® V-Belting** (3L,A,B,C,)
For use as an emergency replacement where endless V-belts cannot be installed.

17 **QD Bushings**
Standardized for interchangeability. Tapered and fully split through bore length for equivalent of interference fit.

18 **Power-Wedge® QD Sheaves** (3V,5V,8V)
High -capacity cast iron sheaves for use with narrow V-Belts. Standardized QD bushings.

19 **V-Ribbed Sheaves** (J)
For use with V-ribbed belts. Precision form-cut grooves for smooth running.

20 **Classical QD Sheaves** (AQ,BQ,CQ,DQ)
High-Quality heavy duty sheaves for classical (A,B,C,D) V-Belts.

21 **Durapower Sheaves-Bushed Type** (3L-4L,4L-5L)
Cast iron, for all types of light-duty and FHP applications using 3L,4L,5L, A and B V-Belts. Bushing interchanges with similar competitive types.

22 **Durapower Sheaves - Fixed Bore Type** (3L-4L,4L-5L)
Cast iron, bore and keywayed to fit popular shaft sizes. For light-duty.

23 **Durapower Sheaves - Adjustable Diameter** (3L-4L,4L-5L)
Rugged cast iron, two piece threaded assembly allows adjustment of pitch diameter. Combination grooves for use with 3L,4L,5L, A and B section V-Belts.

24 **RPP™ PANTHER** (8M,14M)
The ultimate choice in high torque synchronous belt drives.

25 **RPP™ PANTHER Sprockets**
Specially designed to handle the high torque transmitted by PANTHER belt drives.

26 **RPP PLUS™** (3M, 5M, 8M,14M, 20M)
Up to 50% more power capacity than conventional high torque drives.

27 **Dual RPP™** (D8M,D14M)
Dual sided synchronous belt with deep tooth parabolic profile teeth allowing synchronous transmission via both the external and internal pulleys in a multi-pulley drive.

28 **RPP™ Sprockets** (5M,8M,14M,20M)
Precision companion to RPP and RPP PLUS belts on high torque synchronous drives.

29 **Synchro-Cog® Timing Belt** (XL,L,H,XH,XXH)
For synchronization of driven speed to driver speed.

30 **Synchro-Cog® Dual Timing Belt** (DXL, DL, DH)
Provides maintenance-free synchronization from both sides of the belt on positive drive applications. Excellent performance on serpentine type drives.

31 **Synchro-Cog Timing Pulleys**
(XL,L,H,XH,XXH) For perfect mating with timing belts on synchronous drives.

DRIVE ASSISTANCE DATA

Application Engineering/Industrial Belt Products
2601 W. Battlefield Springfield, MO 65808
417-881-7440 fax: 417-881-1009

Please note! It is important to completely fill out this form in order to receive an accurate, timely response. Data sheets with missing information will be delayed until sufficient information is provided.

CONTACT PERSON_____ COMPANY _____

PHONE # _____ FAX # _____

DATE _____ TYPE OF DRIVE ASSISTANCE REQUIRED: V-BELT_____ POLY-RIB_____ SYNCH. _____

DRIVEN APPLICATION _____ (Required to select service factor)

OUR COMPETITOR IS:_____

DRIVER DATA:

MOTOR DESCRIPTION_____

MOTOR HP_____ RPM _____ SHAFT DIAMETER _____

GEARBOX: YES/NO, IF YES: RATIO:_____ OR OUT RPM _____

SHAFT DIAMETER _____ MAXIMUM PULLEY DIAMETER _____

MAXIMUM PULLEY WIDTH _____

DRIVEN DATA:

DESIRED RPM _____ OR RATIO _____ (SPEED UP/SPEED DOWN)

SHAFT DIAMETER_____ MAXIMUM PULLEY DIAMETER_____

MAXIMUM PULLEY WIDTH_____

CENTER DISTANCE RANGE:

MINIMUM _____ NOMINAL _____ MAXIMUM _____

CENTER DISTANCE ADJUSTMENT:

ADJUSTABLE BASE_____ PIVOTED BASE_____ FIXED _____

IDLER: INSIDE _____ OUTSIDE _____ TIGHT SIDE _____ SLACK SIDE _____

DUTY CYCLE:

8 HOURS / DAY_____ 16 HOURS / DAY_____ 24 HOURS / DAY _____

ENVIRONMENT:

TEMPERATURE _____° F OIL _____ DUST _____ WATER _____ ABRASIVES _____

START UP CHARACTERISTICS:

SOFT START _____ CLUTCH _____ NO LOAD_____ FULL LOAD _____

EXISTING DRIVE:

V-BELT _____ POLY-RIB_____ SYCHRONOUS _____ CHAIN_____ OTHER_____

REMARKS: _____

_____

DESIGN REQUIRED BY (DATE)_____

COMPLETE DRIVE SKETCH ON ADDITIONAL PAGE IF POSSIBLE.

CARLISLE ENGINEERING GUIDE FOR INDUSTRIAL V-BELT DRIVES

Note: Before using the drive tables in this book, please READ the PREFACE to assist in selecting the proper V-belt for your drive.

The following trademarks have been registered in the United States Patent and Trademark Office by their owner, Dayco Products Inc., Dayton Ohio 45401-1004

ARAMAX	DAYFLEX	Vee-RIB	SYNCHRO-COG
BLUE RIBBON	DURAPOWER	POWER-WEDGE	THE ENERGY SAVER!
COG-BAND	E-Z FLEX	RPP	THORO-LINK
COG-BELT	GOLD RIBBON	SPIRA-BEAD	UFL
CON-FLEX	XDV	STIFLEX	VEE-BAND
	PANTHER	SUPER BLUE RIBBON	WEDGE-BAND
		SUPER II	

QD is a registered trademark-Emerson Electric

* All dimensions and weights in this catalog are approximate.

THESE BELTS ARE NOT TO BE USED ON, AND ARE NOT DESIGNED FOR, PRIVATE, COMMERCIAL, OR ULTRALIGHT PLANES OR HELICOPTERS

TABLE OF CONTENTS

TABLE OF CONTENTS
MULTIPLE V-BELT DRIVES

V-Belt Drive Selection Using Pre-Engineered Tables . . . . . page
Drive Selection Procedure 15
Pre-Engineered Drive Table Example Problem 15
Service Factor Table 17
Cross Section Selection Tables 18, 19

V-Belt Pre-Engineered Drive Selection Tables
Narrow Cross-Sections 20
Classical Cross-Sections 80

V-Belt Drive Selection Using Basic Horsepower Rating Tables
Drive Selection Procedure 143
Basic Horsepower Rating Table Example Problem 143

Basic Horsepower Rating Tables
Classical Cross-Sections 146
Narrow Cross-Sections 156

Installation and Take-Up Data 163

Vee-Rib Belt Drive Selection Procedure 165

FHP Light Duty Drive Selection Procedure 203

V-belt Matching Limits 212

V-belt Nominal Dimensions and Stock Length
Narrow Section V-belts
Power-Wedge Cog-Belt V-belts (3VX, 5VX, 8VX) 214
Super Power-Wedge V-belts (5V,8V) 214
Classical Section V-belts
Gold-Ribbon™ Cog-Belt V-belts (AX,BX,CX,DX) 215-217
Super II V-belt (A,B,C) 215
Aramax Blue Ribbon V-belts (AK,BK,CK) 215
Super Blue Ribbon V-belts (AP,BP,CP,DP) 215
V-Ribbed Belts
Vee-Rib Belts (J,L,M) 218

Fractional Horsepower Light Duty V-belts
Durapower II FHP V-belts (3L,4L,5L) 221
XDV V-belts(38,48,58) 222

Special Application V-belts
Super II V-belt 225
Aramax Blue Ribbon V-belt 227
Wedge-Band Chipper Drive V-belts 229
Connector Belting 231
Thoro-Link Belting 232
Double Angle V-belts 233

TABLE OF CONTENTS
QD MULTIPLE SHEAVES

QD Multiple Sheaves page
Introduction 235
Made To Order Sheaves 235
Ductile Iron and Steel Sheaves and Dynamic Balancing 236
Sheave Rim Speeds (FPM) Table 237

Power-Wedge QD Sheaves
Stock Sizes 238
Sheave Groove Dimensions 243

Classical QD Sheaves
Stock Sizes 245
Datum System 254
Sheave Groove Dimensions 256

V-Ribbed Sheaves
Stock Sizes 258
Sheave Groove Dimensions 259

Light Duty FHP Sheaves
Stock Sizes 260
Sheave Groove Dimensions 261

QD Bushings
Bore and Keyseat Dimensions 271
Stock metric Bores-Key Dimensions 270
QD Bushing Dimensions 270

Installing QD Sheaves
Introduction 272
Installation 272
Removal 273

Special Engineering Information

Speed-Up Drives 275

V-Flat Drives 276

Idler Drives 279

V-belt Drives With Twist & Non-Alignment 282

Determining Non-Standard Sheave Sizes 285

TABLE OF CONTENTS
SPECIAL ENGINEERING INFORMATION

V-belt Tensioning page
Methods of Tensioning V-belts 286
General Method 286
Strand Deflection - Formula Method 288
Example of Determining Tension by Formula Method 290
Alternate Formula for Finding Static Strand Tension 291
Average Tensioning Tables 292
Use of Tables 294
Elongation Method Vee-Band Installation and Tensioning Procedure 294
Instructions for using Dayco V-belt Tensiometer 297

Determination of Hub Load
Introduction 298
The Problem 299
The Solution (Formula Method) 299
The Solution (Force Diagram Method) 300

Electric Motors-Frame Assignments and Minimum Sheave Diameter

Overhang Effect on Bearing Load 303
Introduction 303
Outboard Bearing - Load 304

Flywheel Effect
Torque Required to Accelerate or Decelerate a Flywheel 305

Static Conductive V-belts 306

V-belt Storage Methods 307

Oil & Chemical Resistance of V-belts 309

Heat Resistance of V-belts 310

Useful Formulas
Horsepower Rating Formulas For Carlisle V-belts 311
Calculating Belt Sizes and Center Distances 312
Formulas for Determing HP 313
Formulas for Determining V-belt Tension 314
Other Formulas 315
Conversion Factors 316

V-belt Drive Troubleshooting Guide 317

Glossary of Belt Industry Terminology 318

Brand Name Interchange 321

Drive Assistance Data Sheet 322

DRIVE SELECTION USING PRE-ENGINEERED TABLES

DRIVE SELECTION USING PRE-ENGINEERED TABLES

Drive Selection Procedure

The following pages contain Pre-Engineered Drive Selection Tables for which the majority of all industrial applications will be covered. These various combinations of V-belts and sheaves cover a wide range of horsepowers, speed ratios, and center distances for standard electric motor speeds.

The Pre-Engineered drive tables have been arranged so that the design of a complete drive can be accomplished as easily as possible. To select a drive from the Pre-Engineered tables it is necessary to know only:

- The type of driver (motor) and its rated horsepower.
- The speed of the driver.
- The type of machine to be driven
- The required speed of the driven application
- The service condition under which the drive will operate.
- The desired center distance and any space limitations (radial and axial).

The use of these tables might best be illustrated by utilizing them in solving a typical V-Belt drive design problem.

NOTE: These tables are used in conjunction with speed reduction drives with standard motor speeds only. For those drives in which the driven unit operates at a faster speed than the driver, refer to the Special Engineering Section under "Speed-Up Drives" on Page 275.

PRE-ENGINEERED DRIVE TABLE EXAMPLE PROBLEM

THE PROBLEM: A 5 horsepower 1750 rpm normal torque motor is to drive a fan at approximately 930 rpm. The fan is to operate 8-10 hrs daily. The space in which this drive is to be installed dictates that the drive center distance be approximately 17″.

SERVICE FACTORS

When designing a drive, service conditions play an important role in selecting proper drive components. In order to assist in determining the service conditions of an application, service factor tables are used. The service factor is a multiplier applied to the required horsepower to determine the design horsepower. It compensates for the extra life taken out of a belt during those times which it operates above the required horsepower.

THE PROCEDURE	THE SUMMARY
STEP 1 Determine the service factor ... by first referring to Table 1 on Page 17, and locating the type of application in the left hand column. Read across to the adjoining column and under the heading of normal (for normal duty cycle; in this case 8-10 hrs daily) within the NORMAL TORQUE column and find the service factor value.	5 HP fan normal torque motor 8-10 hrs daily use **1.2 SERVICE FACTOR**
STEP 2 Determine the design horsepower ... by multiplying the rated horsepower of the motor by the service factor obtained.	Design Horsepower = 5 HP x 1.2 SF = 6.0
STEP 3 Determine belt cross-section ... from the appropriate cross-section selection table in Figures 1 & 2 on pages 18 & 19. Locate the RPM of the faster shaft in the left hand column. Then locate the design horsepower of the drive across the bottom of the table. Follow these two lines to the intersecting point to determine cross-section.	**NOTE: The decision to use Power-Wedge Belts was made arbitrarily from the design guide on Page 5.** 6.0 Design Horsepower and 1750 RPM intersect in the 3VX section

DRIVE SELECTION USING PRE-ENGINEERED TABLES (Continued)

PRE-ENGINEERED DRIVE TABLE EXAMPLE PROBLEM (Continued)

	THE PROCEDURE	THE SUMMARY
STEP 4	Select the driven speed ... by turning to the pre-engineered drive tables for 3VX beginning on page 20. Under the column headed approximate driven speeds and horsepower per belt, locate the 1750 RPM column. Following down that column find the driven speed closest to the desired 930 RPM. (See Page 26)	fan speed = 924 rpm
STEP 5	Select the sheaves ... by following across to the right of the selected driven speed on the same line under the column headed outside sheave diameters. This sheave combination will provide the correct speed ratio for the drive. **NOTE: If more than one sheave combination is listed, and belt speed is less than 6500 FPM, consider that the larger sheave sizes generally result in the more economical drive requiring fewer belts with less chance of bearing overload. When the smaller sheave combination is selected consult the NEMA minimum sheave diameter Table 35 on Page 302 to make sure sheaves are not below NEMA recommendations**	Speed Ratio = 1.89 Outside sheave diameters Driver sheave: 2.20″ Driven sheave: 4.12″
STEP 6	Select the belt size ... by reading across on the same line under Nominal center distances and locate the center distance nearest the desired 17’’. After locating the proper center distance follow up that column where the belt size is listed.	The belt size for a 17.5″ center distance is 3VX450
STEP 7	Determine the Arc-Length correction factor ... refer to the Arc-Length correction factor which can be found just below the center distance for a 3VX475 belt with a 1.89 speed ratio.	Arc-Length correction factor 0.9
STEP 8	Determine the corrected belt horsepower rating. The corrected rating is the result of the horsepower per belt multiplied by the arc-length correction factor. The horsepower rating for the drive is found next to the Sheave Datum Diameters column.	1.65 x 0.9 = 1.49 corrected belt horsepower = 1.49
STEP 9	Determine the number of belts required by dividing the design horsepower (from Step 2) by corrected horsepower per belt. When the answer contains a fraction, round up to the next whole number of belts.	6.0 Design HP 6 ÷ 1.49 = 4.03 or 5 belts 1.49 Corrected belt HP
STEP 10	Determine installation and take-up allowances for the drive by referring to the installation and take-up table on Page 163.	Amount for installation = 0.5″ Amount for take-up is = 1.0″
STEP 11	Summarize the drive ... to include driver and driven sheave designations, number of grooves, bushings, and bore sizes from the tables starting on page 238. The belts required by quantity and size designation and nominal center distance adjustments from Step 10. The drive selection is now complete.	1-5 groove 2.20″ non-standard driver sheave 1-5 groove 4.12″ non-standard driven sheave 5 3VX450 belts

DRIVE SELECTION USING PRE-ENGINEERED TABLES (Continued)

⚠WARNING!
Clutching Drives - For clutching drive applications please contact Carlisle Application Engineering.
V-belt drives using the belt as a clutch require special design consideration due to heat generated by belt slip during engagement and disengagement. On clutching applications heat can cause certain V-belt tensile materials to shrink in length. The shrinkage may prevent a belt, which is already engaged and driving, to not declutch. This can be potentially hazardous in many applications. (e.g. lawnmowers)

Table 1 Service Factors

Driven Unit		Normal Torque (Up to 175% of rated torque)			High Torque (above 175% of rated torque)		
		Intermittent	Normal	Continuous	Intermittent	Normal	Continuous
Agitators	Paddle or Propeller, Vertical or Horizontal Screw	1.1	1.2	1.3	1.2	1.3	1.4
Bottling Machinery		1.1	1.2	1.3	1.2	1.3	1.4
Car Dumper, Car Puller		1.2	1.3	1.4	1.3	1.4	1.5
Clarifier, Classifier		1.1	1.2	1.3	1.2	1.3	1.4
Clay Machinery	Brick Press, Briquette, Pug Mill	1.3	1.4	1.5	1.4	1.5	1.6
Compressors	Lobe, Rotary	1.3	1.4	1.5	1.4	1.5	1.6
Reciprocating	1 cylinder - single acting	1.5	1.6	1.7	1.6	1.7	1.8
	1 cylinder - double acting, 2 cylinder single acting	1.4	1.5	1.6	1.5	1.6	1.7
	2 cylinder - double / 3 cylinder & up single & double	1.3	1.4	1.5	1.4	1.5	1.6
Conveyors	Light Duty	1.1	1.3	1.4	1.2	1.3	1.4
	Sand, Grain	1.2	1.3	1.4	1.3	1.4	1.5
	Screw, Drag, Pan	1.3	1.4	1.5	1.4	1.5	1.6
Cranes and Hoists	Hoist, Medium Duty	1.3	1.4	1.5	1.4	1.5	1.6
	Heavy Duty	1.4	1.5	1.6	1.5	1.6	1.7
	Skip Hoist - Travel/Trolley, Slope	1.3	1.4	1.5	1.4	1.5	1.6
Crushers	Gyratory, Jaw, Roll	1.4	1.5	1.6	1.5	1.6	1.7
Dredges	Cable Reel, Conveyor	1.2	1.3	1.4	1.3	1.4	1.5
	Cutter Head Drive, Jig Drive	1.4	1.5	1.6	1.5	1.6	1.7
	Pump, Screen, Stacker, Utility Winch	1.2	1.3	1.4	1.3	1.4	1.5
Dynamometer		1.1	1.2	1.3	1.2	1.3	1.5
Elevators	Bucket, Freight	1.3	1.4	1.5	1.4	1.5	1.6
Fans	Up to 10 HP	1.1	1.2	1.3	1.2	1.3	1.4
	Over 10 HP	1.2	1.3	1.4	1.3	1.4	1.5
Food Industry	Slicers, Dough Mixer, Meat Grinder	1.2	1.3	1.4	1.3	1.4	1.5
Generators	Even Load	1.1	1.2	1.3	1.2	1.3	1.4
	Hoist, Railway Service	1.3	1.4	1.5	1.4	1.5	1.6
	Welder Load	1.4	1.5	1.6	1.5	1.6	1.7
Laundry Machines	Tumbler, Washer	1.2	1.3	1.4	1.3	1.4	1.5
	Extractor	1.4	1.5	1.6	1.5	1.6	1.7
Line Shafts	Driving Processing Machine	1.2	1.3	1.4	1.3	1.4	1.5
Lumber Industry	Band Resaw, Circular Resaw	1.2	1.3	1.4	1.3	1.4	1.5
	Edger, Head Rig, Hog, Log Haul	1.3	1.4	1.5	1.4	1.5	1.6
	Planer	1.2	1.3	1.4	1.3	1.4	1.5
	Rolls: Reversing & Non-Reversing	1.3	1.4	1.5	1.4	1.5	1.6
	Sawdust Conveyor	1.1	1.2	1.3	1.2	1.3	1.4
	Slab Conveyor, Sorting Table	1.2	1.3	1.4	1.3	1.4	1.5
	Debarker, Chipper	1.4	1.5	1.6	1.5	1.6	1.7
Machine tools	Auxiliary	1.1	1.2	1.3	1.2	1.3	1.4
	Main Drive, Notching Press	1.2	1.3	1.4	1.3	1.4	1.5
	Planer (reversing), Plate Planer	1.1	1.2	1.3	1.2	1.3	1.4
	Punch Press, Traverse	1.1	1.2	1.3	1.2	1.3	1.4
Metal Forming	Draw Bench, Carriage, Main Drive	1.3	1.4	1.5	1.4	1.5	1.6
Machines	Wire Drawing, Flattening Machine	1.3	1.4	1.5	1.4	1.5	1.6
Mills (Rotary Type)	Ball or Pebble	1.3	1.4	1.5	1.4	1.5	1.6
	Dryer or Cooler	1.2	1.3	1.4	1.3	1.4	1.5
	Rod or Tube	1.4	1.5	1.6	1.5	1.6	1.7
	Tumbling Barrel	1.2	1.3	1.4	1.3	1.4	1.5
Mixers	Concrete - Continuous & Intermittent	1.3	1.4	1.5	1.4	1.5	1.6
Paper Mills	Agitator	1.1	1.2	1.3	1.2	1.3	1.4
	Barking Drum	1.4	1.5	1.6	1.5	1.6	1.7
	Beater and Pulper	1.2	1.3	1.4	1.3	1.4	1.5
	Chipper	1.4	1.5	1.6	1.5	1.6	1.7
	Dryer, Pulp Grinder, Winder	1.2	1.3	1.4	1.3	1.4	1.5
	Press	1.3	1.4	1.5	1.4	1.5	1.6
Printing Press		1.2	1.3	1.4	1.3	1.4	1.5
Pulverizers	Hammermill - Light Duty	1.3	1.4	1.5	1.4	1.5	1.6
	Hammermill - Heavy Duty	1.4	1.5	1.6	1.5	1.6	1.7
	Hog, Roller	1.2	1.3	1.4	1.3	1.4	1.5
Pumps	Centrifugal	1.1	1.2	1.3	1.2	1.3	1.4
	Gear Type, Rotary	1.2	1.3	1.4	1.3	1.4	1.5
	Oil Well Unit (not over 150% peak torque)	1.3	1.4	1.5	1.4	1.5	1.6
Reciprocating	1 cylinder single & double acting	1.4	1.5	1.6	1.5	1.6	1.7
	2 cylinder sing & double acting / 3 cylinder & up	1.3	1.4	1.5	1.4	1.5	1.6
Rubber/Plastics	Calender, Extruder, Mills	1.4	1.5	1.6	1.5	1.6	1.7
Screens	Coal and Sand (Rotary)	1.3	1.4	1.5	1.4	1.5	1.6
	Vibrating	1.4	1.5	1.6	1.5	1.6	1.7
Sewage Disposal Equipment		1.1	1.2	1.3	1.2	1.3	1.4
Shredder		1.3	1.4	1.5	1.4	1.5	1.6
Steel	Cold/Hot Mill, Coiler (Up or Down)	1.2	1.3	1.4	1.3	1.4	1.5
Industry	Strip, Temper	1.3	1.4	1.5	1.4	1.5	1.6
	Edger Drive, Stoker	1.2	1.3	1.4	1.3	1.4	1.5
	Feed Roll (Blooming)	1.5	1.6	1.7	1.6	1.7	1.8
	Sheet, Strip, Rod Mill, Roughing, Mill Delivery	1.4	1.5	1.6	1.5	1.6	1.7
Textile	Batcher, Calendar, Dry Can, Loom, Napper	1.3	1.4	1.5	1.4	1.5	1.6
Industry	Card Machine, Dyeing Machinery	1.3	1.4	1.5	1.4	1.5	1.6
	Mangle Napper, Spinner Tenter Frame	1.3	1.4	1.5	1.4	1.5	1.6
Woodworking Machines		1.3	1.4	1.5	1.4	1.5	1.6

DRIVE SELECTION USING PRE-ENGINEERED TABLES (Continued)

CROSS-SECTION SELECTION TABLES

To help in selecting the proper V-belt cross-section, Carlisle has provided easy to use cross-section selection tables. These tables allow the user to determine the optimum V-belt cross-section from the design horsepower and faster shaft RPM of the application. When the design horsepower and faster shaft RPM intersect at, or near one of the diagonals separating two cross-section areas, it can be designed using either side of the line. Check the design using both cross-sections and select the drive most economical and consistent with other drive requirements.

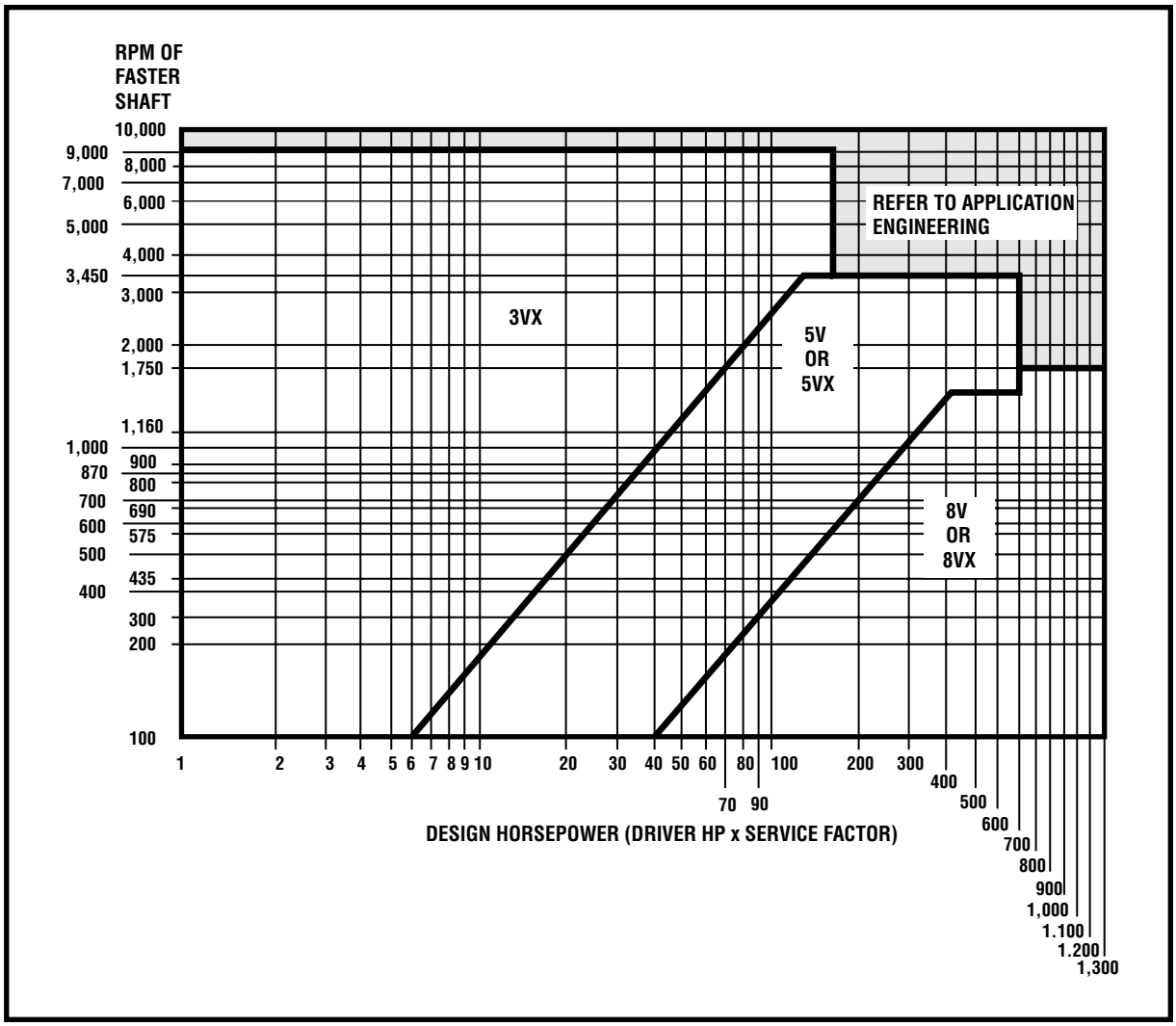

Figure 1
SUPER POWER-WEDGE AND POWER-WEDGE COG-BELT

DRIVE SELECTION USING PRE-ENGINEERED TABLES (Continued)

CROSS-SECTION SELECTION TABLES (Continued)

When the design horsepower and faster shaft RPM intersect at, or near one of the diagonals separating two cross-section areas, it can be designed using either side of the line. Check the design using both cross-sections and select the drive most economical and consistent with other drive requirements.

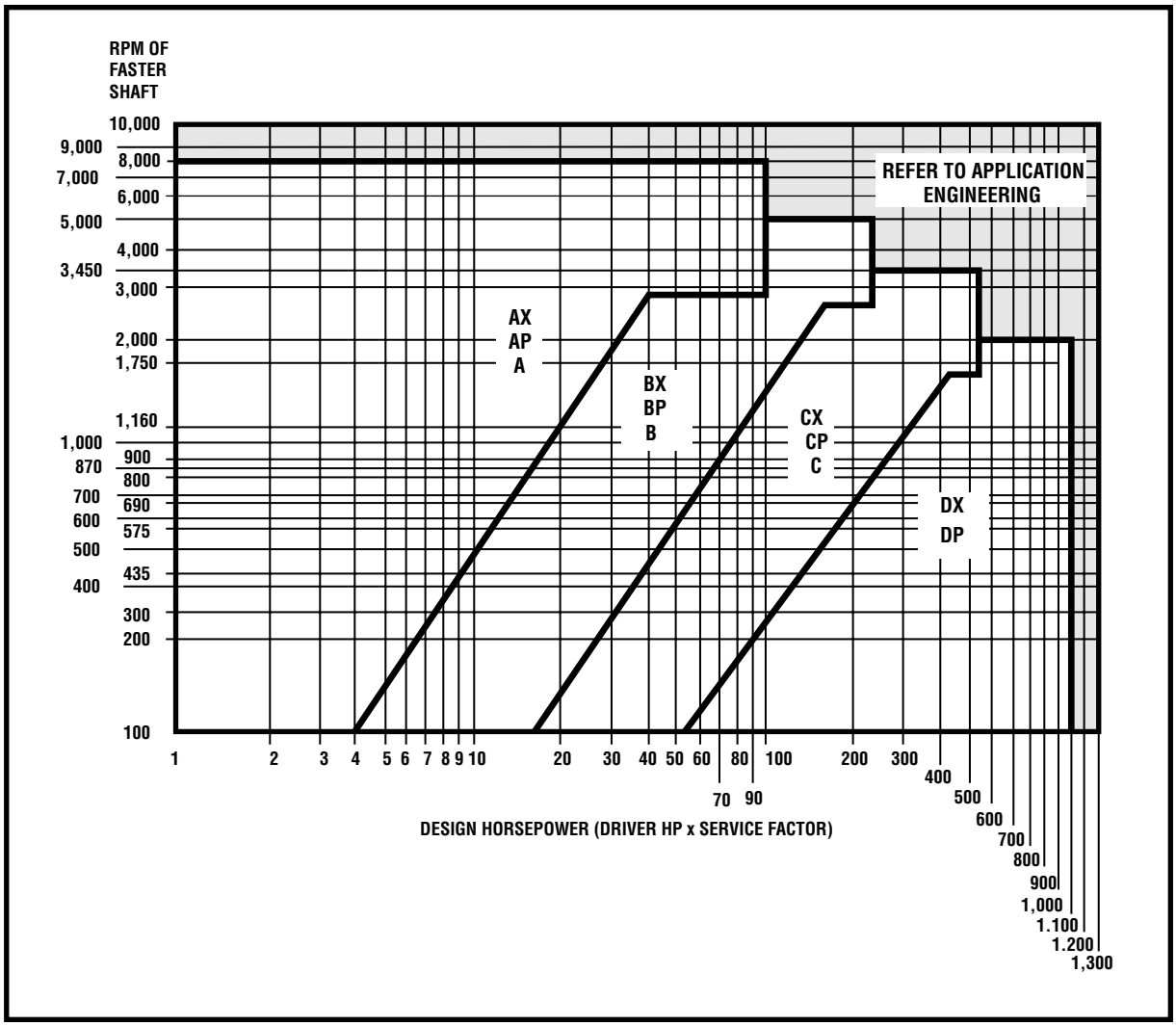

Figure 2
GOLD RIBBON COG-BELT
SUPER BLUE RIBBON
SUPER II

POWER-WEDGE PRE-ENGINEERED DRIVE SELECTION TABLES

3VX PRE-ENGINEERED TABLES Ratio 1.00-1.12

Driven Speed for Motor Speed of				Sheave Outside Diameters		V-Belt Number and Center Distance (Other sizes may be available, see page 214)																
870 RPM	1160 RPM	1750 RPM	3450 RPM	Small Sheave	Large Sheave	Speed Ratio	3VX 250	3VX 265	3VX 280	3VX 300	3VX 315	3VX 335	3VX 355	3VX 375	3VX 400	3VX 425	3VX 450	3VX 475	3VX 500	3VX 530	3VX 560
870	1160	1750	3450	2.20	2.20	1.00	9.0	9.8	10.5	11.5	12.3	13.3	14.3	15.3	16.5	17.8	19.0	20.3	21.5	23.0	24.5
				*			0.8	0.8	0.9	0.9	0.9	0.9	0.9	0.9	0.9	0.9	0.9	0.9	1.0	1.0	1.0
870	1160	1750	3450	2.35	2.35	1.00	8.8	9.6	10.3	11.3	12.1	13.1	14.1	15.1	16.3	17.6	18.8	20.1	21.3	22.8	24.3
				*			0.8	0.8	0.9	0.9	0.9	0.9	0.9	0.9	0.9	0.9	0.9	0.9	1.0	1.0	1.0
870	1160	1750	3450	2.50	2.50	1.00	8.6	9.3	10.1	11.1	11.8	12.8	13.8	14.8	16.1	17.3	18.6	19.8	21.1	22.6	24.1
				*			0.8	0.8	0.9	0.9	0.9	0.9	0.9	0.9	0.9	0.9	0.9	0.9	1.0	1.0	1.0
870	1160	1750	3450	3.15	3.15	1.00	7.6	8.3	9.1	10.1	10.8	11.8	12.8	13.8	15.1	16.3	17.6	18.8	20.1	21.6	23.1
							0.8	0.8	0.9	0.9	0.9	0.9	0.9	0.9	0.9	0.9	0.9	0.9	1.0	1.0	1.0
870	1160	1750	3450	3.65	3.65	1.00	6.8	7.5	8.3	9.3	10.0	11.0	12.0	13.0	14.3	15.5	16.8	18.0	19.3	20.8	22.3
							0.8	0.8	0.9	0.9	0.9	0.9	0.9	0.9	0.9	0.9	0.9	0.9	1.0	1.0	1.0
870	1160	1750	3450	4.12	4.12	1.00	6.0	6.8	7.5	8.5	9.3	10.3	11.3	12.3	13.5	14.8	16.0	17.3	18.5	20.0	21.5
							0.8	0.8	0.9	0.9	0.9	0.9	0.9	0.9	0.9	0.9	0.9	0.9	1.0	1.0	1.0
870	1160	1750	3450	4.50	4.50	1.00	—	6.2	6.9	7.9	8.7	9.7	10.7	11.7	12.9	14.2	15.4	16.7	17.9	19.4	20.9
							—	0.8	0.9	0.9	0.9	0.9	0.9	0.9	0.9	0.9	0.9	0.9	1.0	1.0	1.0
870	1160	1750	3450	4.75	4.75	1.00	—	—	6.5	7.5	8.3	9.3	10.3	11.3	12.5	13.8	15.0	16.3	17.5	19.0	20.5
							—	—	0.9	0.9	0.9	0.9	0.9	0.9	0.9	0.9	0.9	0.9	1.0	1.0	1.0
870	1160	1750	3450	5.00	5.00	1.00	—	—	—	7.1	7.9	8.9	9.9	10.9	12.1	13.4	14.6	15.9	17.1	18.6	20.1
							—	—	—	0.9	0.9	0.9	0.9	0.9	0.9	0.9	0.9	0.9	1.0	1.0	1.0
870	1160	1750	3450	5.60	5.60	1.00	—	—	—	—	—	8.0	9.0	10.0	11.2	12.5	13.7	15.0	16.2	17.7	19.2
							—	—	—	—	—	0.9	0.9	0.9	0.9	0.9	0.9	0.9	1.0	1.0	1.0
870	1160	1750	3450	6.00	6.00	1.00	—	—	—	—	—	—	8.3	9.3	10.6	11.8	13.1	14.3	15.6	17.1	18.6
							—	—	—	—	—	—	0.9	0.9	0.9	0.9	0.9	0.9	1.0	1.0	1.0
870	1160	1750	3450	6.50	6.50	1.00	—	—	—	—	—	—	—	8.5	9.8	11.0	12.3	13.5	14.8	16.3	17.8
							—	—	—	—	—	—	—	0.9	0.9	0.9	0.9	0.9	1.0	1.0	1.0
870	1160	1750	3450	6.90	6.90	1.00	—	—	—	—	—	—	—	—	9.2	10.4	11.7	12.9	14.2	15.7	17.2
							—	—	—	—	—	—	—	—	0.9	0.9	0.9	0.9	1.0	1.0	1.0
870	1160	1750	3450	8.00	8.00	1.00	—	—	—	—	—	—	—	—	—	—	9.9	11.2	12.4	13.9	15.4
							—	—	—	—	—	—	—	—	—	—	0.9	0.9	1.0	1.0	1.0
870	1160	1750	3450	10.6	10.6	1.00	—	—	—	—	—	—	—	—	—	—	—	—	—	—	—
							—	—	—	—	—	—	—	—	—	—	—	—	—	—	—
826	1101	1662	3276	4.75	5.00	1.05	—	—	—	7.3	8.1	9.1	10.1	11.1	12.3	13.6	14.8	16.1	17.3	18.8	20.3
							—	—	—	0.9	0.9	0.9	0.9	0.9	0.9	0.9	0.9	0.9	1.0	1.0	1.0
824	1098	1657	3266	4.50	4.75	1.06	—	—	6.7	7.7	8.5	9.5	10.5	11.5	12.7	14.0	15.2	16.5	17.7	19.2	20.7
							—	—	0.8	0.9	0.9	0.9	0.9	0.9	0.9	0.9	0.9	0.9	1.0	1.0	1.0
820	1094	1650	3253	5.00	5.30	1.06	—	—	—	6.9	7.7	8.7	9.7	10.7	11.9	13.2	14.4	15.7	16.9	18.4	19.9
							—	—	—	0.9	0.9	0.9	0.9	0.9	0.9	0.9	0.9	0.9	1.0	1.0	1.0
819	1092	1648	3249	6.50	6.90	1.06	—	—	—	—	—	—	—	8.2	9.5	10.7	12.0	13.2	14.5	16.0	17.5
							—	—	—	—	—	—	—	0.9	0.9	0.9	0.9	0.9	1.0	1.0	1.0
817	1089	1643	3239	2.35	2.50	1.07	8.7	9.4	10.2	11.2	11.9	12.9	13.9	14.9	16.2	17.4	18.7	19.9	21.2	22.7	24.2
				*			0.8	0.8	0.9	0.9	0.9	0.9	0.9	0.9	0.9	0.9	0.9	0.9	1.0	1.0	1.0
813	1084	1636	3225	2.20	2.35	1.07	8.9	9.7	10.4	11.4	12.2	13.2	14.2	15.2	16.4	17.7	18.9	20.2	21.4	22.9	24.4
				*			0.8	0.8	0.9	0.9	0.9	0.9	0.9	0.9	0.9	0.9	0.9	0.9	1.0	1.0	1.0
812	1082	1632	3218	5.60	6.00	1.07	—	—	—	—	—	7.6	8.6	9.6	10.9	12.1	13.4	14.6	15.9	17.4	18.9
							—	—	—	—	—	0.9	0.9	0.9	0.9	0.9	0.9	0.9	1.0	1.0	1.0
803	1070	1614	3183	6.00	6.50	1.08	—	—	—	—	—	—	7.9	8.9	10.2	11.4	12.7	13.9	15.2	16.7	18.2
							—	—	—	—	—	—	0.9	0.9	0.9	0.9	0.9	0.9	1.0	1.0	1.0
796	1061	1601	3155	4.12	4.50	1.09	—	6.5	7.2	8.2	9.0	10.0	11.0	12.0	13.2	14.5	15.7	17.0	19.2	19.7	21.2
							—	0.8	0.8	0.9	0.9	0.9	0.9	0.9	0.9	0.9	0.9	0.9	1.0	1.0	1.0
782	1043	1573	3102	4.50	5.00	1.11	—	—	6.5	7.5	8.3	9.3	10.3	11.3	12.5	13.8	15.0	16.3	17.5	19.0	20.5
							—	—	0.8	0.9	0.9	0.9	0.9	0.9	0.9	0.9	0.9	0.9	1.0	1.0	1.0
779	1038	1567	3089	4.75	5.30	1.12	—	—	—	7.1	7.9	8.9	9.9	10.9	12.1	13.4	14.6	15.9	17.1	18.6	20.1
							—	—	—	0.9	0.9	0.9	0.9	0.9	0.9	0.9	0.9	0.9	1.0	1.0	1.0
776	1035	1561	3077	5.00	5.60	1.12	—	—	—	—	7.4	8.4	9.4	10.4	11.7	12.9	14.2	15.4	16.7	18.2	19.7
							—	—	—	—	0.9	0.9	0.9	0.9	0.9	0.9	0.9	0.9	1.0	1.0	1.0

*Use only Power-Wedge Cog-Belt V-belt with these diameters. Arc Length Correction Factors are located beneath Center Distance Values.

POWER-WEDGE PRE-ENGINEERED DRIVE SELECTION TABLES

3VX PRE-ENGINEERED TABLES Ratio 1.00-1.12

V-Belt Number and Center Distance (Other sizes may be available, see page 214)															Sheave Datum Diameters		Rated HP per Belt (includes Added HP for Speed Ratio) RPM of Small Sheave			
3VX 600	3VX 630	3VX 670	3VX 710	3VX 750	3VX 800	3VX 850	3VX 900	3VX 950	3VX 1000	3VX 1120	3VX 1180	3VX 1250	3VX 1320	3VX 1400	Small Sheave	Large Sheave	870 RPM	1160 RPM	1750 RPM	3450 RPM
26.5	28.0	30.0	32.0	34.0	36.5	39.0	41.5	44.0	46.5	52.5	55.5	59.0	62.5	66.5	2.20	2.20	0.77	0.98	1.37	2.30
1.0	1.0	1.0	1.0	1.0	1.0	1.1	1.1	1.1	1.1	1.1	1.1	1.1	1.1	1.1						
26.3	27.8	29.8	31.8	33.8	36.3	38.8	41.3	43.8	46.3	52.3	55.3	58.8	62.3	66.3	2.35	2.35	0.91	1.16	1.63	2.78
1.0	1.0	1.0	1.0	1.0	1.0	1.1	1.1	1.1	1.1	1.1	1.1	1.1	1.1	1.1						
26.1	27.6	29.6	31.6	33.6	36.1	38.6	41.1	43.6	46.1	52.1	55.1	58.6	62.1	66.1	2.50	2.50	1.05	1.34	1.89	3.26
1.0	1.0	1.0	1.0	1.0	1.0	1.1	1.1	1.1	1.1	1.1	1.1	1.1	1.1	1.1						
25.1	27.6	29.6	31.6	33.6	36.1	38.6	41.1	43.6	46.1	52.1	54.1	57.6	61.1	65.1	3.15	3.15	1.63	2.10	3.01	5.28
1.0	1.0	1.0	1.0	1.0	1.0	1.1	1.1	1.1	1.1	1.1	1.1	1.1	1.1	1.1						
24.3	25.8	27.8	29.8	31.8	34.3	36.8	39.3	41.8	44.3	50.3	53.3	56.8	60.3	64.3	3.65	3.65	2.08	2.68	3.85	6.78
1.0	1.0	1.0	1.0	1.0	1.0	1.1	1.1	1.1	1.1	1.1	1.1	1.1	1.1	1.1						
23.5	25.0	27.0	29.0	31.0	33.5	36.0	38.5	41.0	43.5	49.5	52.5	56.0	59.5	63.5	4.12	4.12	2.49	3.22	4.63	8.15
1.0	1.0	1.0	1.0	1.0	1.0	1.1	1.1	1.1	1.1	1.1	1.1	1.1	1.1	1.1						
22.9	24.4	26.4	28.4	30.4	32.9	35.4	37.9	40.4	42.9	48.9	51.9	55.4	58.9	62.9	4.50	4.50	2.82	3.65	5.25	9.21
1.0	1.0	1.0	1.0	1.0	1.0	1.1	1.1	1.1	1.1	1.1	1.1	1.1	1.1	1.1						
22.5	24.0	26.0	28.0	30.0	32.5	35.0	37.5	40.0	42.5	48.5	51.5	55.0	58.5	62.5	4.75	4.75	3.04	3.93	5.65	9.90
1.0	1.0	1.0	1.0	1.0	1.0	1.1	1.1	1.1	1.1	1.1	1.1	1.1	1.1	1.1						
22.1	23.6	25.6	27.6	29.6	32.1	34.6	37.1	39.6	42.1	48.1	51.1	54.6	58.1	62.1	5.00	5.00	3.26	4.21	6.06	10.57
1.0	1.0	1.0	1.0	1.0	1.0	1.1	1.1	1.1	1.1	1.1	1.1	1.1	1.1	1.1						
21.2	22.7	24.7	26.7	28.7	31.2	33.7	36.2	38.7	41.2	47.2	50.2	43.7	57.2	61.2	5.60	5.60	3.77	4.88	7.01	12.12
1.0	1.0	1.0	1.0	1.0	1.0	1.1	1.1	1.1	1.1	1.1	1.1	1.1	1.1	1.1						
20.6	22.1	24.1	26.1	28.1	30.6	33.1	35.6	38.1	40.6	46.6	49.6	53.1	56.6	60.6	6.00	6.00	4.11	5.32	7.63	13.11
1.0	1.0	1.0	1.0	1.0	1.0	1.1	1.1	1.1	1.1	1.1	1.1	1.1	1.1	1.1						
19.8	21.3	23.3	25.3	27.3	29.8	32.3	34.8	37.3	39.8	45.8	48.8	52.3	55.8	59.8	6.50	6.50	4.53	5.87	8.40	14.28
1.0	1.0	1.0	1.0	1.0	1.0	1.1	1.1	1.1	1.1	1.1	1.1	1.1	1.1	1.1						
19.8	20.7	22.7	24.7	26.7	29.2	31.7	34.2	36.7	39.2	45.2	48.2	51.7	55.2	59.2	6.90	6.90	4.87	6.30	9.01	15.16
1.0	1.0	1.0	1.0	1.0	1.0	1.1	1.1	1.1	1.1	1.1	1.1	1.1	1.1	1.1						
17.4	18.9	20.9	22.9	24.9	27.4	29.9	32.4	34.9	37.4	43.4	46.4	49.9	53.4	57.4	8.00	8.00	5.78	7.47	10.64	**
1.0	1.0	1.0	1.0	1.0	1.0	1.1	1.1	1.1	1.1	1.1	1.1	1.1	1.1	1.1						
13.3	14.8	16.8	18.8	20.8	23.3	25.8	28.3	30.8	33.3	39.3	42.3	45.8	49.3	53.3	10.60	10.60	7.87	10.13	14.22	**
1.0	1.0	1.0	1.0	1.0	1.0	1.1	1.1	1.1	1.1	1.1	1.1	1.1	1.1	1.1						
22.3	23.8	25.8	27.8	29.8	32.3	34.8	37.3	39.8	42.3	48.3	51.3	54.8	58.3	62.3	4.75	5.00	3.07	3.98	5.72	10.02
1.0	1.0	1.0	1.0	1.0	1.0	1.1	1.1	1.1	1.1	1.1	1.1	1.1	1.1	1.1						
22.7	24.2	26.2	28.2	30.2	32.7	35.2	37.7	40.2	42.7	48.7	51.7	55.2	58.7	62.7	4.50	4.75	2.86	3.70	5.31	9.34
1.0	1.0	1.0	1.0	1.0	1.0	1.1	1.1	1.1	1.1	1.1	1.1	1.1	1.1	1.1						
21.9	23.4	25.4	27.4	29.4	31.9	34.4	36.9	39.4	41.9	47.9	50.9	54.4	57.9	61.9	5.00	5.30	3.29	4.26	6.13	10.71
1.0	1.0	1.0	1.0	1.0	1.0	1.1	1.1	1.1	1.1	1.1	1.1	1.1	1.1	1.1						
19.5	21.0	23.0	25.0	27.0	29.5	32.0	34.5	37.0	39.5	45.5	48.5	52.0	55.5	59.5	6.50	6.90	4.57	5.91	8.48	14.42
1.0	1.0	1.0	1.0	1.0	1.0	1.1	1.1	1.1	1.1	1.1	1.1	1.1	1.1	1.1						
26.2	27.7	29.7	31.7	33.7	36.2	38.7	41.2	43.7	46.2	52.2	55.2	58.7	62.2	66.2	2.35	2.5	0.95	1.21	1.71	2.93
1.0	1.0	1.0	1.0	1.0	1.0	1.1	1.1	1.1	1.1	1.1	1.1	1.1	1.1	1.1						
26.4	27.9	29.9	31.9	33.9	36.4	38.9	41.4	43.9	46.4	52.4	55.4	58.9	62.4	66.4	2.20	2.35	0.81	1.03	1.45	2.46
1.0	1.0	1.0	1.0	1.0	1.0	1.1	1.1	1.1	1.1	1.1	1.1	1.1	1.1	1.1						
20.9	22.4	24.4	26.4	28.4	30.9	33.4	35.9	38.4	40.9	46.9	49.4	53.4	56.9	60.9	5.60	6.00	3.81	4.93	7.09	12.28
1.0	1.0	1.0	1.0	1.0	1.0	1.1	1.1	1.1	1.1	1.1	1.1	1.1	1.1	1.1						
20.2	21.7	23.7	25.7	27.7	30.2	32.7	35.2	37.7	40.2	46.2	49.2	52.7	56.2	60.2	6.00	6.50	4.16	5.38	7.73	13.29
1.0	1.0	1.0	1.0	1.0	1.0	1.1	1.1	1.1	1.1	1.1	1.1	1.1	1.1	1.1						
23.2	24.7	26.7	28.7	30.7	33.2	35.7	38.2	40.7	43.2	49.2	52.2	55.7	59.2	63.2	4.12	4.50	2.54	3.29	4.73	8.34
1.0	1.0	1.0	1.0	1.0	1.0	1.1	1.1	1.1	1.1	1.1	1.1	1.1	1.1	1.1						
23.2	24.7	26.7	28.7	30.7	33.2	35.7	38.2	40.7	43.2	49.2	51.5	55.0	58.5	62.5	4.50	5.00	2.88	3.73	5.36	9.44
1.0	1.0	1.0	1.0	1.0	1.0	1.1	1.1	1.1	1.1	1.1	1.1	1.1	1.1	1.1						
22.1	23.6	25.6	27.6	29.6	32.1	34.6	37.1	39.6	42.1	48.1	51.1	54.6	58.1	62.1	4.75	5.30	3.10	4.01	5.77	10.13
1.0	1.0	1.0	1.0	1.0	1.0	1.1	1.1	1.1	1.1	1.1	1.1	1.1	1.1	1.1						
21.7	23.2	25.2	27.2	29.2	31.7	34.2	36.7	39.2	41.7	47.7	50.7	54.2	57.7	61.7	5.00	5.60	3.32	4.29	6.18	10.81
1.0	1.0	1.0	1.0	1.0	1.0	1.1	1.1	1.1	1.1	1.1	1.1	1.1	1.1	1.1						

Arc Length Correction Factors are located beneath Center Distance Values.

⚠**WARNING!** **Sheave Rim Speed in excess of 6500 feet per minute — see pg. 236

POWER-WEDGE PRE-ENGINEERED DRIVE SELECTION TABLES

3VX PRE-ENGINEERED TABLES Ratio 1.13-1.35

Driven Speed for Motor Speed of				Sheave Outside Diameters		V-Belt Number and Center Distance (Other sizes may be available, see page 214)																
870 RPM	1160 RPM	1750 RPM	3450 RPM	Small Sheave	Large Sheave	Speed Ratio	3VX 250	3VX 265	3VX 280	3VX 300	3VX 315	3VX 335	3VX 355	3VX 375	3VX 400	3VX 425	3VX 450	3VX 475	3VX 500	3VX 530	3VX 560
770	1026	1548	3052	3.65	4.12	1.13	6.4	7.1	7.9	8.9	9.6	10.6	11.6	12.6	13.9	15.1	16.4	17.6	18.9	20.4	21.9
							0.8	0.8	0.8	0.9	0.9	0.9	0.9	0.9	0.9	0.9	0.9	0.9	1.0	1.0	1.0
763	1018	1536	3028	2.20	2.50	1.14	8.8	9.6	10.3	11.3	12.1	13.1	14.1	15.1	16.3	17.6	18.8	20.1	21.3	22.8	24.3
				*			0.8	0.8	0.8	0.9	0.9	0.9	0.9	0.9	0.9	0.9	0.9	0.9	1.0	1.0	1.0
756	1008	1520	2997	6.00	6.90	1.15	—	—	—	—	—	—	—	8.6	9.9	11.1	12.4	13.6	14.9	16.4	17.9
							—	—	—	—	—	—	—	0.9	0.9	0.9	0.9	0.9	1.0	1.0	1.0
753	1005	1515	2988	4.12	4.75	1.15	—	6.3	7.0	8.0	8.8	9.8	10.8	11.8	13.0	14.3	15.5	16.8	18.0	19.5	21.0
							—	0.8	0.8	0.9	0.9	0.9	0.9	0.9	0.9	0.9	0.9	0.9	1.0	1.0	1.0
749	999	1508	2973	6.90	8.00	1.16	7.2	7.9	8.7	9.7	10.4	11.4	12.4	13.4	14.7	15.9	17.2	18.4	19.7	21.2	22.7
							0.8	0.8	0.8	0.9	0.9	0.9	0.9	0.9	0.9	0.9	0.9	0.9	1.0	1.0	1.0
750	999	1508	2973	6.90	8.00	1.16	—	—	—	—	—	—	—	—	—	9.5	10.8	12.0	13.3	14.8	16.3
							—	—	—	—	—	—	—	—	—	0.9	0.9	0.9	1.0	1.0	1.0
749	998	1506	2969	5.60	6.50	1.16	—	—	—	—	—	—	8.2	9.2	10.5	11.7	13.0	14.2	15.5	17.0	18.5
							—	—	—	—	0.9	0.9	0.9	0.9	0.9	0.9	0.9	0.9	1.0	1.0	1.0
737	983	1483	2924	4.50	5.30	1.18	—	—	—	7.3	8.0	9.0	10.0	11.0	12.3	13.5	14.8	16.0	17.3	18.8	20.3
							—	—	—	0.9	0.9	0.9	0.9	0.9	0.9	0.9	0.9	0.9	1.0	1.0	1.0
737	982	1482	2922	4.75	5.60	1.18	—	—	—	6.9	7.6	8.6	9.6	10.6	11.9	13.1	14.4	15.6	16.9	18.4	19.9
							—	—	—	0.9	0.9	0.9	0.9	0.9	0.9	0.9	0.9	0.9	1.0	1.0	1.0
724	965	1456	2870	5.00	6.00	1.20	—	—	—	—	7.1	8.1	9.1	10.1	11.3	12.6	13.9	15.1	16.4	17.9	19.4
							—	—	—	—	0.9	0.9	0.9	0.9	0.9	0.9	0.9	0.9	1.0	1.0	1.0
715	954	1439	2837	4.12	5.00	1.22	-0.0	6.1	6.8	7.8	8.6	9.6	10.6	11.6	12.8	14.1	15.3	16.6	17.8	19.3	20.8
							-0.0	0.8	0.8	0.9	0.9	0.9	0.9	0.9	0.9	0.9	0.9	0.9	1.0	1.0	1.0
706	941	1420	2799	6.50	8.00	1.23	—	—	—	—	—	—	—	—	—	9.8	11.1	12.3	13.6	15.1	16.6
							—	—	—	—	—	—	0.9	0.9	0.9	0.9	0.9	0.9	1.0	1.0	1.0
705	940	1418	2795	5.60	6.90	1.23	—	—	—	—	—	—	7.9	8.9	10.2	11.4	12.7	13.9	15.2	16.7	18.2
							—	—	—	—	—	—	0.9	0.9	0.9	0.9	0.9	0.9	1.0	1.0	1.0
704	938	1416	2791	3.65	4.50	1.24	6.1	6.8	7.6	8.6	9.3	10.3	11.3	12.3	13.6	14.8	16.1	17.3	18.6	20.1	21.6
							0.8	0.8	0.8	0.9	0.9	0.9	0.9	0.9	0.9	0.9	0.9	0.9	1.0	1.0	1.0
704	938	1416	2791	3.65	4.50	1.24	6.1	6.8	7.6	8.6	9.3	10.3	11.3	12.3	13.6	14.8	16.1	17.3	18.6	20.1	21.6
							0.8	0.8	0.8	0.9	0.9	0.9	0.9	0.9	0.9	0.9	0.9	0.9	1.0	1.0	1.0
698	930	1403	2766	4.50	5.60	1.25	-0.0	-0.0	-0.0	7.0	7.8	8.7	9.8	10.8	12.1	13.3	14.6	15.8	17.1	18.6	20.1
							-0.0	-0.0	-0.0	0.9	0.9	0.9	0.9	0.9	0.9	0.9	0.9	0.9	1.0	1.0	1.0
688	917	1383	2727	2.50	3.15	1.27	8.1	8.8	9.6	10.6	11.3	12.3	13.3	14.3	15.6	16.8	18.1	19.3	20.6	22.1	23.6
				*			0.8	0.8	0.8	0.9	0.9	0.9	0.9	0.9	0.9	0.9	0.9	0.9	1.0	1.0	1.0
687	916	1382	2725	4.75	6.00	1.27	—	—	—	—	7.3	8.3	9.3	10.3	11.5	12.8	14.0	15.3	16.5	18.0	19.5
							—	—	—	—	0.9	0.9	0.9	0.9	0.9	0.9	0.9	0.9	1.0	1.0	1.0
674	899	1357	2675	4.12	5.30	1.29	—	—	6.6	7.6	8.3	9.3	10.3	11.3	12.6	13.8	15.1	16.3	17.6	19.1	20.6
							—	—	0.8	0.9	0.9	0.9	0.9	0.9	0.9	0.9	0.9	0.9	1.0	1.0	1.0
668	890	1343	2648	5.00	6.50	1.30	—	—	—	—	—	7.7	8.7	9.7	10.9	12.2	13.4	14.7	16.0	17.5	19.0
							—	—	—	—	—	0.9	0.9	0.9	0.9	0.9	0.9	0.9	1.0	1.0	1.0
666	889	1340	2643	3.65	4.75	1.31	5.9	6.6	7.4	8.4	9.1	10.1	11.1	12.1	13.4	14.6	15.9	17.1	18.4	19.9	21.4
							0.8	0.8	0.8	0.9	0.9	0.9	0.9	0.9	0.9	0.9	0.9	0.9	1.0	1.0	1.0
663	884	1333	2628	3.15	4.12	1.31	6.8	7.5	8.3	9.3	10.0	11.0	12.0	13.0	14.3	15.5	16.8	18.0	19.3	20.8	22.3
							0.8	0.8	0.8	0.9	0.9	0.9	0.9	0.9	0.9	0.9	0.9	0.9	1.0	1.0	1.0
658	877	1323	2609	10.60	14.00	1.32	—	—	—	—	—	—	—	—	—	—	—	—	—	—	—
							—	—	—	—	—	—	—	—	—	—	—	—	—	—	—
656	874	1319	2600	8.00	10.60	1.33	—	—	—	—	—	—	—	—	—	—	—	—	—	11.8	13.3
							—	—	—	—	—	—	—	—	—	—	—	—	—	1.0	1.0
651	868	1309	2580	4.50	6.00	1.34	—	—	—	—	7.5	8.5	9.5	10.5	11.7	13.0	14.2	15.5	16.7	18.2	19.7
							—	—	—	—	0.9	0.9	0.9	0.9	0.9	0.9	0.9	0.9	0.9	1.0	1.0
651	868	1310	2582	6.00	8.00	1.34	—	—	—	—	—	—	—	—	8.9	10.2	11.5	12.7	14.0	15.5	17.0
							—	—	—	—	—	—	—	—	0.9	0.9	0.9	0.9	0.9	1.0	1.0
645	861	1298	2560	2.35	3.15	1.35	8.2	8.9	9.7	10.7	11.4	12.4	13.4	14.4	15.7	16.9	18.2	19.4	20.7	22.2	23.7
							0.8	0.8	0.8	0.9	0.9	0.9	0.9	0.9	0.9	0.9	0.9	0.9	1.0	1.0	1.0

*Use only Power-Wedge Cog-Belt with these diameters.

Arc Length Correction Factors are located beneath Center Distance Values.

POWER-WEDGE PRE-ENGINEERED DRIVE SELECTION TABLES

3VX PRE-ENGINEERED TABLES Ratio 1.13-1.35

V-Belt Number and Center Distance (Other sizes may be available, see page 214)															Sheave Datum Diameters		Rated HP per Belt (includes Added HP for Speed Ratio) RPM of Small Sheave			
3VX 600	3VX 630	3VX 670	3VX 710	3VX 750	3VX 800	3VX 850	3VX 900	3VX 950	3VX 1000	3VX 1120	3VX 1180	3VX 1250	3VX 1320	3VX 1400	Small Sheave	Large Sheave	870 RPM	1160 RPM	1750 RPM	3450 RPM
23.9	25.4	27.4	29.4	31.4	33.9	36.4	38.9	41.4	43.9	49.9	52.9	56.4	59.9	63.9	3.65	4.12	2.14	2.77	3.98	7.04
1.0	1.0	1.0	1.0	1.0	1.0	1.1	1.1	1.1	1.1	1.1	1.1	1.1	1.1	1.1						
26.3	27.8	29.8	31.8	33.8	36.3	38.8	41.3	43.8	46.3	52.3	55.3	58.8	62.3	66.3	2.20	2.50	0.84	1.07	1.50	2.57
1.0	1.0	1.0	1.0	1.0	1.0	1.1	1.1	1.1	1.1	1.1	1.1	1.1	1.1	1.1						
19.9	21.4	23.4	25.4	27.4	29.9	32.4	34.9	37.4	39.9	45.9	48.9	52.4	55.9	59.9	6.00	6.90	4.18	5.41	7.78	13.39
1.0	1.0	1.0	1.0	1.0	1.0	1.1	1.1	1.1	1.1	1.1	1.1	1.1	1.1	1.1						
23.0	24.5	26.5	28.5	30.5	33.0	35.5	38.0	40.5	43.0	49.0	52.0	55.5	59.0	63.0	4.12	4.75	2.56	3.32	4.77	8.43
1.0	1.0	1.0	1.0	1.0	1.0	1.1	1.1	1.1	1.1	1.1	1.1	1.1	1.1	1.1						
24.7	26.2	28.2	30.2	32.2	34.7	37.2	39.7	42.2	44.7	50.7	53.7	57.2	60.7	64.7	3.15	3.65	1.71	2.20	3.15	5.58
1.0	1.0	1.0	1.0	1.0	1.0	1.1	1.1	1.1	1.1	1.1	1.1	1.1	1.1	1.1						
18.3	19.8	21.8	23.8	25.8	28.3	30.8	33.3	35.8	38.3	44.3	47.3	50.8	54.3	58.3	6.90	8.00	4.94	6.40	9.16	15.45
1.0	1.0	1.0	1.0	1.0	1.0	1.1	1.1	1.1	1.1	1.1	1.1	1.1	1.1	1.1						
20.5	22.0	24.0	26.0	28.0	30.5	33.0	35.5	38.0	40.5	46.5	49.5	53.0	56.5	60.5	5.60	6.50	3.84	4.98	7.16	12.41
1.0	1.0	1.0	1.0	1.0	1.0	1.1	1.1	1.1	1.1	1.1	1.1	1.1	1.1	1.1						
22.3	23.8	25.8	27.8	29.8	32.3	34.8	37.3	39.8	42.3	48.3	51.3	54.8	58.3	62.3	4.50	5.30	2.90	3.76	5.41	9.53
1.0	1.0	1.0	1.0	1.0	1.0	1.1	1.1	1.1	1.1	1.1	1.1	1.1	1.1	1.1						
21.9	23.4	25.4	27.4	29.4	31.9	34.4	36.9	39.4	41.9	47.9	50.9	54.4	57.9	61.9	4.75	5.60	3.12	4.04	5.81	10.21
1.0	1.0	1.0	1.0	1.0	1.0	1.1	1.1	1.1	1.1	1.1	1.1	1.1	1.1	1.1						
21.4	22.9	24.9	26.9	28.9	31.4	33.9	36.4	38.9	41.4	47.4	50.4	53.9	57.4	61.4	5.00	6.00	334	4.33	6.23	10.91
1.0	1.0	1.0	1.0	1.0	1.0	1.1	1.1	1.1	1.1	1.1	1.1	1.1	1.1	1.1						
22.8	24.3	26.3	28.3	30.3	32.8	35.3	37.8	40.3	42.8	48.8	51.8	55.3	58.8	62.8	4.12	5.00	2.58	3.34	4.80	8.50
1.0	1.0	1.0	1.0	1.0	1.0	1.1	1.1	1.1	1.1	1.1	1.1	1.1	1.1	1.1						
18.6	20.1	22.1	24.1	26.1	28.6	31.1	33.6	36.1	38.6	44.6	47.6	51.1	54.6	58.6	6.50	8.00	4.62	5.99	8.59	14.64
1.0	1.0	1.0	1.0	1.0	1.0	1.0	1.1	1.1	1.1	1.1	1.1	1.1	1.1	1.1						
20.2	21.7	23.7	25.7	27.7	30.2	32.7	35.2	37.7	40.2	46.2	49.2	52.7	56.2	60.2	5.60	6.90	3.86	5.00	7.19	12.49
1.0	1.0	1.0	1.0	1.0	1.0	1.1	1.1	1.1	1.1	1.1	1.1	1.1	1.1	1.1						
23.6	25.1	27.1	29.1	31.1	33.6	36.1	38.6	41.1	43.6	49.6	52.6	56.1	59.6	63.6	3.65	4.50	2.17	2.81	4.03	7.15
1.0	1.0	1.0	1.0	1.0	1.0	1.1	1.1	1.1	1.1	1.1	1.1	1.1	1.1	1.1						
23.6	25.1	27.1	29.1	31.1	33.6	36.1	38.6	41.1	43.6	49.6	52.6	56.1	59.6	63.6	3.65	4.50	2.17	2.81	4.03	7.15
1.0	1.0	1.0	1.0	1.0	1.0	1.1	1.1	1.1	1.1	1.1	1.1	1.1	1.1	1.1						
22.1	23.6	25.6	27.6	29.6	32.1	34.6	37.1	39.6	42.1	48.1	51.1	54.6	58.1	62.1	4.50	5.60	2.92	3.78	5.44	9.59
1.0	1.0	1.0	1.0	1.0	1.0	1.1	1.1	1.1	1.1	1.1	1.1	1.1	1.1	1.1						
25.6	27.1	29.1	31.1	33.1	35.6	38.1	40.6	43.1	45.6	51.6	54.6	58.1	61.6	65.6	2.50	3.15	1.15	1.47	2.09	3.65
1.0	1.0	1.0	1.0	1.0	1.0	1.1	1.1	1.1	1.1	1.1	1.1	1.1	1.1	1.1						
21.5	23.0	25.0	27.0	29.0	31.6	34.1	36.6	39.1	41.6	47.6	50.6	54.1	57.6	61.6	4.75	6.00	3.14	4.07	5.85	10.29
1.0	1.0	1.0	1.0	1.0	1.0	1.1	1.1	1.1	1.1	1.1	1.1	1.1	1.1	1.1						
22.6	24.1	26.1	28.1	30.1	32.6	35.1	37.6	40.1	42.6	48.6	51.6	55.1	58.6	62.6	4.12	5.30	2.59	3.36	4.83	8.55
1.0	1.0	1.0	1.0	1.0	1.0	1.1	1.1	1.1	1.1	1.1	1.1	1.1	1.1	1.1						
21.0	22.5	24.5	26.5	28.5	31.0	33.5	36.0	38.5	41.0	47.0	50.0	53.5	57.0	61.0	5.00	6.50	3.36	4.35	6.27	10.99
1.0	1.0	1.0	1.0	1.0	1.0	1.0	1.1	1.1	1.1	1.1	1.1	1.1	1.1	1.1						
23.4	24.9	26.9	28.9	30.9	33.4	35.9	38.4	40.9	43.4	49.4	52.4	55.9	59.4	63.4	3.65	4.75	2.18	2.82	4.06	7.20
1.0	1.0	1.0	1.0	1.0	1.0	1.1	1.1	1.1	1.1	1.1	1.1	1.1	1.1	1.1						
24.3	25.8	27.8	29.8	31.8	34.3	36.8	39.3	41.8	44.3	50.3	53.3	56.8	60.3	64.3	3.15	4.12	1.74	2.25	3.22	5.71
1.0	1.0	1.0	1.0	1.0	1.0	1.1	1.1	1.1	1.1	1.1	1.1	1.1	1.1	1.1						
—	—	14.1	16.1	18.1	20.6	23.1	25.6	28.1	30.6	36.6	39.6	43.1	46.6	50.7	10.60	14.00	7.98	10.27	14.43	**
—	—	1.0	1.0	1.0	1.0	1.0	1.1	1.1	1.1	1.1	1.1	1.1	1.1	1.1						
15.3	16.8	18.8	20.9	22.9	25.4	27.9	30.4	32.9	35.4	41.4	44.4	47.9	51.4	55.4	8.00	10.60	5.89	7.61	10.86	**
1.0	1.0	1.0	1.0	1.0	1.0	1.0	1.1	1.1	1.1	1.1	1.1	1.1	1.1	1.1						
21.7	23.2	25.2	27.2	29.2	31.7	34.2	36.7	39.2	41.7	47.7	50.7	54.2	57.7	61.7	4.50	6.00	2.93	3.80	5.47	9.65
1.0	1.0	1.0	1.0	1.0	1.0	1.1	1.1	1.1	1.1	1.1	1.1	1.1	1.1	1.1						
19.0	20.5	22.5	24.5	26.5	29.0	31.5	34.0	36.5	39.0	45.0	48.0	51.5	55.0	59.0	6.00	8.00	4.22	5.47	7.85	13.54
1.0	1.0	1.0	1.0	1.0	1.0	1.0	1.1	1.1	1.1	1.1	1.1	1.1	1.1	1.1						
25.7	27.2	29.2	31.2	33.2	35.7	38.2	40.7	43.2	45.7	51.7	54.7	58.2	61.7	65.7	2.35	3.15	1.02	1.31	1.85	3.23
1.0	1.0	1.0	1.0	1.0	1.0	1.1	1.1	1.1	1.1	1.1	1.1	1.1	1.1	1.1						

Arc Length Correction Factors are located beneath Center Distance Values.

⚠**WARNING!** **Sheave Rim Speed in excess of 6500 feet per minute — see pg. 236

POWER-WEDGE PRE-ENGINEERED DRIVE SELECTION TABLES

3VX PRE-ENGINEERED TABLES Ratio 1.36-1.75

Driven Speed for Motor Speed of				Sheave Outside Diameters		V-Belt Number and Center Distance (Other sizes may be available, see page 214)																
870 RPM	1160 RPM	1750 RPM	3450 RPM	Small Sheave	Large Sheave	Speed Ratio	3VX 250	3VX 265	3VX 280	3VX 300	3VX 315	3VX 335	3VX 355	3VX 375	3VX 400	3VX 425	3VX 450	3VX 475	3VX 500	3VX 530	3VX 560
638	851	1283	2530	4.12	5.60	1.36	—	—	—	7.3	8.1	9.1	10.1	11.1	12.3	13.6	14.8	16.1	17.4	18.9	20.4
							—	—	—	0.8	0.9	0.9	0.9	0.9	0.9	0.9	0.9	0.9	0.9	1.0	1.0
634	845	1275	2514	4.75	6.50	1.37	—	—	—	—	—	7.9	8.9	9.9	11.1	12.4	13.6	14.9	16.1	17.6	19.1
							—	—	—	—	—	0.9	0.9	0.9	0.9	0.9	0.9	0.9	0.9	1.0	1.0
633	844	1273	2509	3.65	5.00	1.38	—	6.4	7.2	8.2	8.9	9.9	10.9	11.9	13.2	14.4	15.7	16.9	18.2	19.7	21.2
								0.8	0.8	0.9	0.9	0.9	0.9	0.9	0.9	0.9	0.9	0.9	1.0	1.0	1.0
629	838	1265	2493	5.00	6.90	1.38	—	—	—	—	—	—	8.3	9.4	10.6	11.9	13.1	14.4	15.6	17.1	18.6
							—	—	—	—	—	—	0.9	0.9	0.9	0.9	0.9	0.9	0.9	1.0	1.0
606	808	1219	2403	3.15	4.50	1.44	6.5	7.2	8.0	0.9	9.7	10.7	11.7	12.7	14.0	15.2	16.5	17.7	19.0	20.5	22.0
							0.8	0.8	0.8	0.9	0.9	0.9	0.9	0.9	0.9	0.9	0.9	0.9	1.0	1.0	1.0
607	810	1222	2408	5.60	8.00	1.43	—	—	—	—	—	—	—	—	9.2	10.5	11.8	13.0	14.3	15.8	17.3
							—	—	—	—	—	—	—	—	0.9	0.9	0.9	0.9	0.9	1.0	1.0
603	805	1214	2392	2.20	3.15	1.44	8.3	9.0	9.8	10.8	11.5	12.5	13.5	14.5	15.8	17.0	18.3	19.5	20.8	22.3	23.8
							0,8	0.8	0.8	0.9	0.9	0.9	0.9	0.9	0.9	0.9	0.9	0.9	1.0	1.0	1.0
600	800	1207	2380	4.50	6.50	1.45	—	—	—	—	7.0	8.0	9.1	10.1	11.3	12.6	13.8	15.1	16.3	17.8	19.3
							—	—	—	—	0.9	0.9	0.9	0.9	0.9	0.9	0.9	0.9	0.9	1.0	1.0
597	795	1200	2366	3.65	5.30	1.46	-0.0	0.8	0.8	0.8	8.7	9.7	10.7	11.7	12.9	14.2	15.4	16.7	18.0	19.5	21.0
							-0.0	0.8	0.8	0.8	0.9	0.9	0.9	0.9	0.9	0.9	0.9	0.9	0.9	1.0	1.0
597	796	1201	2367	4.75	6.90	1.46	—	—	—	—	—	7.5	8.5	9.5	10.8	12.1	13.3	14.6	15.8	17.3	18.8
							—	—	—	—	—	0.9	0.9	0.9	0.9	0.9	0.9	0.9	0.9	1.0	1.0
595	793	1197	2360	4.12	6.00	1.46	—	—	—	7.0	7.7	8.8	9.8	10.8	12.0	13.3	14.5	15.8	17.0	18.5	20.0
							—	—	—	0.8	0.9	0.9	0.9	0.9	0.9	0.9	0.9	0.9	0.9	1.0	1.0
592	789	1191	2348	2.50	3.65	1.47	7.6	8.4	9.2	10.2	10.9	11.9	12.9	13.9	15.2	16.4	17.7	18.9	20.2	21.7	23.2
				*			0.8	0.8	0.8	0.9	0.9	0.9	0.9	0.9	0.9	0.9	0.9	0.9	1.0	1.0	1.0
574	765	1154	2276	3.15	4.75	1.52	6.2	7.0	7.8	8.8	9.5	10.5	11.5	12.5	13.8	15.0	16.3	17.5	18.8	20.3	21.8
							0.8	0.8	0.8	0.9	0.9	0.9	0.9	0.9	0.9	0.9	0.9	0.9	0.9	1.0	1.0
565	754	1137	2241	4.50	6.90	1.54	—	—	—	—	—	7.7	8.7	9.7	11.0	12.2	13.5	14.7	16.0	17.5	19.0
							—	—	—	—	—	0.9	0.9	0.9	0.9	0.9	0.9	0.9	0.9	1.0	1.0
564	752	1135	2238	3.65	5.60	1.54	—	—	6.7	7.7	8.4	9.4	10.4	11.4	12.7	14.0	15.2	16.5	17.7	19.2	20.7
							—	—	0.8	0.8	0.9	0.9	0.9	0.9	0.9	0.9	0.9	0.9	0.9	1.0	1.0
565	753	1136	2240	6.90	10.60	1.54	—	—	—	—	—	—	—	—	—	—	—	—	11.1	12.6	14.1
							—	—	—	—	—	—	—	—	—	—	—	—	0.9	0.9	1.0
556	741	1118	2204	2.35	3.65	1.57	7.8	8.5	9.3	10.3	11.0	12.0	13.0	14.0	15.3	16.5	17.8	19.0	20.3	21.8	23.3
				*			0.8	0.8	0.8	0.9	0.9	0.9	0.9	0.9	0.9	0.9	0.9	0.9	1.0	1.0	1.0
549	732	1104	2177	4.12	6.50	1.58	—	—	—	—	7.3	8.3	9.3	10.3	11.6	12.9	14.1	15.4	16.6	18.1	19.6
							—	—	—	—	0.9	0.9	0.9	0.9	0.9	0.9	0.9	0.9	0.9	1.0	1.0
545	726	1096	2161	3.15	5.00	1.60	6.0	6.8	7.5	8.5	9.3	10.3	11.3	12.3	13.6	14.8	16.1	17.3	18.6	20.1	21.6
							0.8	0.8	0.8	0.9	0.9	0.9	0.9	0.9	0.9	0.9	0.9	0.9	0.9	1.0	1.0
542	722	1090	2148	5.00	8.00	1.61	—	—	—	—	—	—	—	8.4	9.7	10.9	12.2	13.5	14.7	16.2	17.7
							—	—	—	—	—	—	—	0.9	0.9	0.9	0.9	0.9	0.9	1.0	1.0
532	709	1070	2109	6.50	10.60	1.64	—	—	—	—	—	—	—	—	—	—	—	10.1	11.4	12.9	14.4
							—	—	—	—	—	—	—	—	—	—	—	0.9	0.9	0.9	1.0
526	702	1059	2087	3.65	6.00	1.65	—	—	—	7.3	8.1	9.1	10.1	11.1	12.4	13.6	14.9	16.1	17.4	18.9	20.4
							—	—	—	0.8	0.9	0.9	0.9	0.9	0.9	0.9	0.9	0.9	0.9	1.0	1.0
524	698	1053	2077	2.50	4.12	1.66	7.3	8.0	8.8	9.8	10.5	11.5	12.5	13.5	14.8	16.0	17.3	18.5	19.8	21.3	22.8
				*			0.8	0.8	0.8	0.8	0.9	0.9	0.9	0.9	0.9	0.9	0.9	0.9	0.9	1.0	1.0
520	693	1045	2060	2.20	3.65	1.67	7.9	8.6	9.4	10.4	11.1	12.1	13.1	14.1	15.4	16.6	17.9	19.1	20.4	21.9	23.4
				*			0.8	0.8	0.8	0.9	0.9	0.9	0.9	0.9	0.9	0.9	0.9	0.9	0.9	1.0	1.0
517	689	1040	2050	4.12	6.90	1.68	—	—	—	—	—	8.0	9.0	10.0	11.3	12.5	13.8	15.0	16.3	17.8	19.3
							—	—	—	—	—	0.9	0.9	0.9	0.9	0.9	0.9	0.9	0.9	1.0	1.0
514	685	1033	2037	3.15	5.30	1.69	5.8	6.5	7.3	8.3	9.0	10.1	11.1	12.1	13.3	14.6	15.8	17.1	18.3	19.8	21.3
							0.8	0.8	0.8	0.8	0.9	0.9	0.9	0.9	0.9	0.9	0.9	0.9	0.9	1.0	1.0
514	686	1035	2040	4.75	8.00	1.69	—	—	—	—	—	—	—	8.6	9.9	11.1	12.4	13.6	14.9	16.4	17.9
							—	—	—	—	—	—	—	0.9	0.9	0.9	0.9	0.9	0.9	1.0	1.0
496	661	997	1966	8.00	14.00	1.75	—	—	—	—	—	—	—	—	—	—	—	—	—	—	—
							—	—	—	—	—	—	—	—	—	—	—	—	—	—	—

*Use only Power-Wedge Cog-Belt with these diameters. Arc Length Correction Factors are located beneath Center Distance Values.

POWER-WEDGE PRE-ENGINEERED DRIVE SELECTION TABLES

3VX PRE-ENGINEERED TABLES Ratio 1.36-1.75

V-Belt Number and Center Distance (Other sizes may be available, see page 214)															Sheave Datum Diameters		Rated HP per Belt (includes Added HP for Speed Ratio) RPM of Small Sheave			
3VX 600	3VX 630	3VX 670	3VX 710	3VX 750	3VX 800	3VX 850	3VX 900	3VX 950	3VX 1000	3VX 1120	3VX 1180	3VX 1250	3VX 1320	3VX 1400	Small Sheave	Large Sheave	870 RPM	1160 RPM	1750 RPM	3450 RPM
22.4	23.9	25.9	27.9	29.9	32.4	34.9	37.4	39.9	42.4	48.4	51.4	54.9	58.4	62.4	4.12	5.60	2.60	3.37	4.85	8.59
1.0	1.0	1.0	1.0	1.0	1.0	1.0	1.1	1.1	1.1	1.1	1.1	1.1	1.1	1.1						
21.1	22.6	24.6	26.6	28.7	31.2	33.7	36.2	38.7	41.2	47.2	50.2	53.7	57.2	61.2	4.75	6.50	3.15	4.09	5.88	10.35
1.0	1.0	1.0	1.0	1.0	1.0	1.0	1.1	1.1	1.1	1.1	1.1	1.1	1.1	1.1						
23.2	24.7	26.7	28.7	30.7	33.2	35.7	38.2	40.7	43.2	49.2	52.2	55.7	59.2	63.2	3.65	5.00	2.19	2.84	4.08	7.24
1.0	1.0	1.0	1.0	1.0	1.0	1.0	1.1	1.1	1.1	1.1	1.1	1.1	1.1	1.1						
20.6	22.1	24.1	26.1	28.1	30.6	33.1	35.6	38.1	40.6	46.6	49.6	53.1	56.6	60.6	5.00	6.90	3.37	4.37	6.29	11.03
1.0	1.0	1.0	1.0	1.0	1.0	1.0	1.1	1.1	1.1	1.1	1.1	1.1	1.1	1.1						
24.0	25.5	27.5	29.5	31.5	34.0	36.5	39.0	41.5	44.0	50.0	53.0	56.5	60.0	64.0	3.15	4.50	1.75	2.26	3.25	5.76
1.0	1.0	1.0	1.0	1.0	1.0	1.0	1.1	1.1	1.1	1.1	1.1	1.1	1.1	1.1						
19.3	30.8	22.8	24.8	26.8	29.3	31.8	34.3	36.8	39.3	45.3	48.3	51.8	55.3	59.3	5.60	8.00	2.89	5.04	7.25	12.60
1.0	1.0	1.0	1.0	1.0	1.0	1.0	1.1	1.1	1.1	1.1	1.1	1.1	1.1	1.1						
25.8	27.3	29.3	31.3	33.3	35.8	38.3	40.8	43.3	45.8	51.8	54.8	58.3	61.8	65.8	2.20	3.15	0.90	1.14	1.61	2.78
1.0	1.0	1.0	1.0	1.0	1.0	1.0	1.1	1.1	1.1	1.1	1.1	1.1	1.1	1.1						
21.3	22.8	24.8	26.8	28.8	31.3	33.8	36.3	38.8	41.3	47.4	50.4	53.9	57.4	61.4	4.50	6.50	2.95	3.81	5.49	9.70
1.0	1.0	1.0	1.0	1.0	1.0	1.0	1.1	1.1	1.1	1.1	1.1	1.1	1.1	1.1						
23.0	24.5	26.5	28.5	30.5	33.0	35.5	38.0	40.5	43.0	49.0	52.0	55.5	59.0	63.0	3.65	5.30	2.20	2.85	4.09	7.27
1.0	1.0	1.0	1.0	1.0	1.0	1.0	1.1	1.1	1.1	1.1	1.1	1.1	1.1	1.1						
20.8	22.3	24.3	26.3	28.3	30.8	33.3	35.8	38.3	40.8	46.8	49.8	53.3	56.8	60.8	4.75	6.90	3.16	4.10	5.90	10.39
1.0	1.0	1.0	1.0	1.0	1.0	1.0	1.1	1.1	1.1	1.1	1.1	1.1	1.1	1.1						
22.0	23.5	25.5	27.5	29.5	32.0	34.5	37.0	39.5	42.0	48.0	51.0	54.5	58.0	62.0	4.12	6.00	2.61	3.39	4.87	8.63
1.0	1.0	1.0	1.0	1.0	1.0	1.0	1.1	1.1	1.1	1.1	1.1	1.1	1.1	1.1						
25.2	26.7	28.7	30.7	32.7	35.2	37.7	40.2	42.7	45.2	51.2	54.2	57.7	61.2	65.2	2.50	3.65	1.17	1.50	2.14	3.75
1.0	1.0	1.0	1.0	1.0	1.1	1.0	1.1	1.1	1.1	1.1	1.1	1.1	1.1	1.1						
23.8	25.3	27.3	29.3	31.3	33.8	36.3	38.8	41.3	43.8	49.8	52.8	56.3	59.8	63.8	3.15	4.75	1.76	2.27	3.26	5.79
1.0	1.0	1.0	1.0	1.0	1.0	1.0	1.1	1.1	1.1	1.1	1.1	1.1	1.1	1.1						
21.0	22.5	24.5	26.5	28.5	31.0	33.5	36.0	38.5	41.0	47.0	50.0	53.5	57.0	61.0	4.50	6.90	2.95	3.82	5.515	9.72
1.0	1.0	1.0	1.0	1.0	1.0	1.0	1.1	1.1	1.1	1.1	1.1	1.1	1.1	1.1						
22.7	24.2	26.2	28.2	30.2	32.7	35.2	37.7	40.2	42.7	48.7	51.7	55.2	58.7	62.7	3.65	5.60	2.21	2.85	4.11	7.29
1.0	1.0	1.0	1.0	1.0	1.0	1.0	1.1	1.1	1.1	1.1	1.1	1.1	1.1	1.1						
16.1	17.7	19.7	21.7	23.7	26.2	28.7	31.2	33.7	36.2	42.2	45.2	48.7	52.2	56.2	6.90	10.60	5.00	6.47	9.27	15.67
1.0	1.0	1.0	1.0	1.0	1.0	1.0	1.1	1.1	1.1	1.1	1.1	1.1	1.1	1.1						
25.3	26.8	28.8	30.8	32.8	35.3	37.8	40.3	42.8	45.3	51.3	54.3	57.8	61.3	65.3	2.35	3.65	1.04	1.33	1.89	3.30
1.0	1.0	1.0	1.0	1.0	1.0	1.1	1.1	1.1	1.1	1.1	1.1	1.1	1.1	1.1						
21.6	23.1	25.1	27.1	29.1	31.6	34.1	36.6	39.1	41.6	47.6	50.6	54.1	57.6	61.6	4.12	6.50	2.62	3.40	4.89	8.67
1.0	1.0	1.0	1.0	1.0	1.0	1.0	1.1	1.1	1.1	1.1	1.1	1.1	1.1	1.1						
23.6	25.1	27.1	29.1	31.1	33.6	36.1	38.6	41.1	43.6	49.6	52.6	56.1	59.6	63.6	3.15	5.00	1.77	2.28	3.27	5.81
1.0	1.0	1.0	1.0	1.0	1.0	1.0	1.1	1.1	1.1	1.1	1.1	1.1	1.1	1.1						
19.7	21.2	23.2	25.2	27.2	29.8	32.3	34.8	37.3	39.8	45.8	48.8	52.3	55.8	59.8	5.00	8.00	3.39	4.39	6.32	11.09
1.0	1.0	1.0	1.0	1.0	1.0	1.0	1.1	1.1	1.1	1.1	1.1	1.1	1.1	1.1						
16.4	18.0	20.0	22.0	24.0	26.5	29.0	31.5	34.0	36.5	42.5	45.5	49.0	52.5	56.5	6.50	10.60	4.67	6.04	8.67	14.80
—	—	1.0	1.0	1.0	1.0	1.0	1.1	1.1	1.1	1.1	1.1	1.1	1.1	1.1						
22.4	23.9	25.9	27.9	29.9	32.4	34.9	37.4	39.9	42.4	48.4	51.4	54.9	58.4	62.4	3.65	6.00	2.21	2.86	4.12	7.31
1.0	1.0	1.0	1.0	1.0	1.0	1.0	1.1	1.1	1.1	1.1	1.1	1.1	1.1	1.1						
24.8	26.3	28.3	30.3	32.3	34.8	37.3	39.8	42.3	44.8	50.8	53.8	57.3	60.8	64.8	2.50	4.12	1.18	1.52	2.16	3.80
1.0	1.0	1.0	1.0	1.0	1.0	1.0	1.1	1.1	1.1	1.1	1.1	1.1	1.1	1.1						
25.4	26.9	28.9	30.9	32.9	35.4	37.9	40.4	42.9	45.4	51.4	54.4	57.9	61.4	65.4	2.20	3.65	0.91	1.16	1.64	2.84
1.0	1.0	1.0	1.0	1.0	1.0	1.0	1.1	1.1	1.1	1.1	1.1	1.1	1.1	1.1						
21.3	22.8	24.8	26.8	28.8	31.3	33.8	36.3	38.8	41.3	47.3	50.3	53.8	57.3	61.3	4.12	6.90	2.63	3.40	4.90	8.68
1.0	1.0	1.0	1.0	1.0	1.0	1.0	1.1	1.1	1.1	1.1	1.1	1.1	1.1	1.1						
23.3	24.8	26.8	28.8	30.8	33.3	35.8	38.3	40.8	43.4	49.4	52.4	55.9	59.4	63.4	3.15	5.30	1.77	2.28	3.28	5.82
1.0	1.0	1.0	1.0	1.0	1.0	1.0	1.1	1.1	1.1	1.1	1.1	1.1	1.1	1.1						
19.9	21.4	23.4	25.4	27.4	29.9	32.4	34.9	37.5	40.0	46.0	49.0	52.5	56.0	60.0	4.75	8.00	3.18	4.11	5.93	10.44
1.0	1.0	1.0	1.0	1.0	1.0	1.0	1.1	1.1	1.1	1.1	1.1	1.1	1.1	1.1						
—	13.9	15.9	18.0	20.0	22.5	25.0	27.6	30.1	32.6	38.6	41.6	45.1	48.6	52.6	8.00	14.00	5.92	7.65	10.92	**
—	1.0	1.0	1.0	1.0	1.0	1.0	1.0	1.1	1.1	1.1	1.1	1.1	1.1	1.1						

Arc Length Correction Factors are located beneath Center Distance Values.

⚠**WARNING!** **Sheave Rim Speed in excess of 6500 feet per minute — see pg. 236

POWER-WEDGE PRE-ENGINEERED DRIVE SELECTION TABLES

3VX PRE-ENGINEERED TABLES Ratio 1.77-2.27

Driven Speed for Motor Speed of				Sheave Outside Diameters		V-Belt Number and Center Distance (Other sizes may be available, see page 214)																
870 RPM	1160 RPM	1750 RPM	3450 RPM	Small Sheave	Large Sheave	Speed Ratio	3VX 250	3VX 265	3VX 280	3VX 300	3VX 315	3VX 335	3VX 355	3VX 375	3VX 400	3VX 425	3VX 450	3VX 475	3VX 500	3VX 530	3VX 560
492	656	989	1950	2.35	4.12	1.77	7.4	8.1	8.9	9.9	10.6	11.6	12.6	13.6	14.9	16.1	17.4	18.6	19.9	21.4	22.9
				*			0.8	0.8	0.8	0.8	0.9	0.9	0.9	0.9	0.9	0.9	0.9	0.9	0.9	1.0	1.0
491	654	987	1946	6.00	10.60	1.77	—	—	—	—	—	—	—	—	—	—	—	10.5	11.7	13.3	14.8
							—	—	—	—	—	—	—	—	—	—	—	0.9	0.9	0.9	1.0
486	648	977	1927	3.15	5.60	1.79	—	6.3	7.0	8.0	8.8	9.8	10.8	11.8	13.1	14.3	15.6	16.8	18.1	19.6	21.1
							—	0.8	0.8	0.8	0.9	0.9	0.9	0.9	0.9	0.9	0.9	0.9	0.9	1.0	1.0
487	649	980	1931	4.50	8.00	1.79	—	—	—	—	—	—	—	8.8	10.0	11.3	12.6	13.8	15.1	16.6	18.1
							—	—	—	—	—	—	—	0.9	0.9	0.9	0.9	0.9	0.9	0.9	1.0
486	647	977	1926	3.65	6.50	1.79	—	—	—	6.9	7.6	8.7	9.7	10.7	11.9	13.2	14.5	15.7	17.0	18.5	20.0
							—	—	—	0.8	0.8	0.9	0.9	0.9	0.9	0.9	0.9	0.9	0.9	1.0	1.0
479	639	963	1899	2.50	4.50	1.82	6.9	7.7	8.4	9.4	10.2	11.2	12.2	13.2	14.5	15.7	17.0	18.2	19.5	21.0	22.5
				*			0.8	0.8	0.8	0.8	0.9	0.9	0.9	0.9	0.9	0.9	0.9	0.9	0.9	1.0	1.0
460	613	924	1822	2.20	4.12	1.89	7.5	8.2	9.0	10.0	10.7	11.7	12.8	13.8	15.0	16.3	17.5	18.8	20.0	21.5	23.0
				*			0.8	0.8	0.8	0.8	0.9	0.9	0.9	0.9	0.9	0.9	0.9	0.9	0.9	1.0	1.0
457	610	920	1813	3.65	6.90	1.90	—	—	—	—	7.3	8.3	9.3	10.3	11.6	12.9	14.1	15.4	16.6	18.1	19.6
							—	—	—	—	0.8	0.9	0.9	0.9	0.9	0.9	0.9	0.9	0.9	1.0	1.0
458	610	921	1815	5.60	10.60	1.90	—	—	—	—	—	—	—	—	—	—	—	10.7	12.0	13.5	15.1
							—	—	—	—	—	—	—	—	—	—	—	0.9	0.9	0.9	1.0
454	605	912	1798	2.50	4.75	1.92	6.7	7.5	8.2	9.2	10.0	11.0	12.0	13.0	14.3	15.5	16.8	18.0	19.3	20.8	22.3
				*			0.8	0.8	0.8	0.8	0.9	0.9	0.9	0.9	0.9	0.9	0.9	0.9	0.9	1.0	1.0
453	604	912	1797	3.15	6.00	1.92	—	—	6.7	7.7	8.4	9.5	10.5	11.5	12.7	14.0	15.2	16.5	17.8	19.3	20.8
							—	—	0.8	0.8	0.8	0.9	0.9	0.9	0.9	0.9	0.9	0.9	0.9	1.0	1.0
450	600	904	1783	2.35	4.50	1.93	7.0	7.8	8.6	9.6	10.3	11.3	12.3	13.3	14.6	15.8	17.1	18.3	19.6	21.1	22.6
				*			0.8	0.8	0.8	0.8	0.9	0.9	0.9	0.9	0.9	0.9	0.9	0.9	0.9	1.0	1.0
445	594	896	1766	4.12	8.00	1.95	—	—	—	—	—	—	8.0	9.0	10.3	11.6	12.8	14.1	15.4	16.9	18.4
							—	—	—	—	—	—	0.9	0.9	0.9	0.9	0.9	0.9	0.9	0.9	1.0
431	574	866	1708	2.50	5.00	2.02	6.5	7.3	8.0	9.0	9.9	10.8	11.8	12.8	14.1	15.3	16.6	17.8	19.1	20.6	22.1
				*			0.8	0.8	0.8	0.8	0.8	0.9	0.9	0.9	0.9	0.9	0.9	0.9	0.9	1.0	1.0
426	568	856	1688	2.35	4.75	2.043	6.8	7.6	8.3	9.3	10.1	11.1	12.1	13.1	14.4	15.6	16.9	18.1	19.4	20.9	22.4
				*			0.8	0.8	0.8	0.8	0.9	0.9	0.9	0.9	0.9	0.9	0.9	0.9	0.9	1.0	1.0
427	570	859	1694	6.90	14.00	2.04	—	—	—	—	—	—	—	—	—	—	—	—	—	—	—
							—	—	—	—	—	—	—	—	—	—	—	—	—	—	—
420	560	846	1667	2.20	4.50	2.07	7.1	7.9	8.7	9.7	10.4	1.4	12.4	13.4	14.7	15.9	17.2	18.5	19.7	21.2	22.7
				*			0.8	0.8	0.8	0.8	0.9	0.9	0.9	0.9	0.9	0.9	0.9	0.9	0.9	1.0	1.0
427	570	859	1694	6.90	14.00	2.04	—	—	—	—	—	—	—	—	—	—	—	—	—	—	—
				*			—	—	—	—	—	—	—	—	—	—	—	—	—	—	—
418	558	841	1658	3.15	6.50	2.08	—	—	—	7.2	8.0	9.0	10.0	11.0	12.3	13.6	14.8	16.1	17.3	18.8	20.4
				*			—	—	—	0.8	0.8	0.9	0.9	0.9	0.9	0.9	0.9	0.9	0.9	0.9	1.0
406	541	817	1610	2.50	5.30	2.14	6.2	7.0	7.7	8.8	9.5	10.5	11.5	12.5	13.8	15.1	16.3	17.6	18.8	20.3	21.8
				*			0.8	0.8	0.8	0.8	0.8	0.9	0.9	0.9	0.9	0.9	0.9	0.9	0.9	1.0	1.0
408	544	821	1619	5.00	10.60	2.13	—	—	—	—	—	—	—	—	—	—	9.8	11.1	12.4	14.0	15.5
							—	—	—	—	—	—	—	—	—	—	0.9	0.9	0.9	0.9	0.9
404	539	813	1603	2.35	5.00	2.15	6.6	7.4	8.1	9.1	9.9	10.9	11.9	12.9	14.2	15.4	16.7	17.9	19.2	20.7	22.2
				*			0.8	0.8	0.8	0.8	0.8	0.9	0.9	0.9	0.9	0.9	0.9	0.9	0.9	1.0	1.0
402	536	809	1595	6.50	14.00	2.16	—	—	—	—	—	—	—	—	—	—	—	—	—	—	—
							—	—	—	—	—	—	—	—	—	—	—	—	—	—	—
398	531	801	1578	2.20	4.75	2.19	6.9	7.7	8.4	9.5	10.2	11.2	12.2	13.2	14.5	15.7	17.0	18.2	19.5	21.0	22.5
				*			0.8	0.8	0.8	0.8	0.8	0.9	0.9	0.9	0.9	0.9	0.9	0.9	0.9	1.0	1.0
394	525	792	1561	3.15	6.90	2.21	—	—	—	6.9	7.6	8.7	9.7	10.7	12.0	13.2	14.5	15.7	17.0	18.5	20.0
							—	—	—	0.8	0.8	0.9	0.9	0.9	0.9	0.9	0.9	0.9	0.9	0.9	1.0
394	525	792	1562	3.65	8.00	2.21	—	—	—	—	—	—	8.3	9.3	10.6	11.9	13.2	14.4	15.7	17.2	18.7
							—	—	—	—	—	—		0.9	0.9	0.9	0.9	0.9	0.9	0.9	1.0
388	517	780	1537	4.75	10.60	2.24	—	—	—	—	—	—	—	—	—	—	10.0	11.3	12.6	14.1	15.7
							—	—	—	—	—	—	—	—	—	—	0.9	0.9	0.9	0.9	0.9
384	512	773	1523	2.50	5.60	2.27	5.9	6.7	7.5	8.5	9.3	10.3	11.3	12.3	13.5	14.8	16.1	17.3	18.6	20.1	21.6
				*			0.8	0.8	0.8	0.8	0.8	0.9	0.9	0.9	0.9	0.9	0.9	0.9	0.9	1.0	1.0

*Use only Power-Wedge Cog-Belt with these diameters. Arc Length Correction Factors are located beneath Center Distance Values.

POWER-WEDGE PRE-ENGINEERED DRIVE SELECTION TABLES

3VX PRE-ENGINEERED TABLES Ratio 1.77-2.27

V-Belt Number and Center Distance (Other sizes may be available, see page 214)															Sheave Datum Diameters		Rated HP per Belt (includes Added HP for Speed Ratio) RPM of Small Sheave			
3VX 600	3VX 630	3VX 670	3VX 710	3VX 750	3VX 800	3VX 850	3VX 900	3VX 950	3VX 1000	3VX 1120	3VX 1180	3VX 1250	3VX 1320	3VX 1400	Small Sheave	Large Sheave	870 RPM	1160 RPM	1750 RPM	3450 RPM
24.9	26.4	28.4	30.4	32.4	34.9	37.4	39.9	42.4	44.9	50.9	53.9	57.4	60.9	64.9	2.35	4.12	1.05	1.34	1.91	3.33
1.0	1.0	1.0	1.0	1.0	1.0	1.0	1.1	1.1	1.1	1.1	1.1	1.1	1.1	1.1						
16.8	18.3	20.3	22.3	24.3	26.9	29.4	31.9	34.4	36.9	42.9	45.9	49.4	52.9	56.9	6.00	10.60	4.25	5.51	7.91	13.65
1.0	1.0	1.0	1.0	1.0	1.0	1.0	1.0	1.1	1.1	1.1	1.1	1.1	1.1	1.1						
23.1	24.6	26.6	28.6	30.6	33.1	35.6	38.1	40.6	43.1	49.1	52.1	55.6	59.1	63.1	3.15	5.60	1.77	2.29	3.28	5.83
1.0	1.0	1.0	1.0	1.0	1.0	1.0	1.1	1.1	1.1	1.1	1.1	1.1	1.1	1.1						
20.1	21.6	23.6	25.6	27.6	30.1	32.6	35.1	37.6	40.1	46.1	49.2	52.7	56.2	60.2	4.50	8.00	2.96	3.84	5.53	9.76
1.0	1.0	1.0	1.0	1.0	1.0	1.0	1.1	1.1	1.1	1.1	1.1	1.1	1.1	1.1						
22.0	23.5	25.5	27.5	29.5	32.0	34.5	37.0	39.5	42.0	48.0	51.0	54.5	58.0	62.0	3.65	6.50	2.22	2.87	4.13	7.33
1.0	1.0	1.0	1.0	1.0	1.0	1.0	1.1	1.1	1.1	1.1	1.1	1.1	1.1	1.1						
24.5	26.0	28.0	30.0	32.0	34.5	37.0	39.5	42.0	44.5	50.5	53.5	57.0	60.5	64.5	2.50	4.50	1.19	1.53	2.17	3.82
1.0	1.0	1.0	1.0	1.0	1.0	1.0	1.1	1.1	1.1	1.1	1.1	1.1	1.1	1.1						
25.0	26.5	28.5	30.5	32.5	35.0	37.5	40.0	42.5	45.0	51.0	54.0	57.5	61.0	65.0	2.20	4.12	0.92	1.17	1.65	2.86
1.0	1.0	1.0	1.0	1.0	1.0	1.0	1.1	1.1	1.1	1.1	1.1	1.1	1.1	1.1						
21.7	23.2	25.2	27.2	29.2	31.7	34.2	36.7	39.2	41.7	47.7	50.7	54.2	57.7	61.7	3.65	6.90	2.22	2.87	4.13	7.34
1.0	1.0	1.0	1.0	1.0	1.0	1.0	1.1	1.1	1.1	1.1	1.1	1.1	1.1	1.1						
17.1	18.6	20.6	22.6	24.6	27.2	29.7	32.2	34.7	37.2	43.2	46.2	39.7	53.2	57.2	5.60	10.60	3.91	5.07	7.29	12.68
1.0	1.0	1.0	1.0	1.0	1.0	1.0	1.0	1.1	1.1	1.1	1.1	1.1	1.1	1.1						
24.3	25.8	27.8	29.8	31.8	34.3	36.8	39.3	41.8	44.3	50.3	53.3	56.8	60.3	64.3	2.50	4.75	1.19	1.53	2.18	3.82
1.0	1.0	1.0	1.0	1.0	1.0	1.0	1.1	1.1	1.1	1.1	1.1	1.1	1.1	1.1						
22.8	24.3	26.3	28.3	30.3	32.8	35.3	37.8	40.3	42.8	48.8	51.8	55.3	58.8	62.8	3.15	6.00	1.78	2.29	3.29	5.85
1.0	1.0	1.0	1.0	1.0	1.0	1.0	1.1	1.1	1.1	1.1	1.1	1.1	1.1	1.1						
24.6	26.1	28.1	30.1	32.1	34.6	37.1	39.6	42.1	44.6	50.6	53.6	57.1	60.6	64.6	2.35	4.50	1.05	1.35	1.92	3.35
1.0	1.0	1.0	1.0	1.0	1.0	1.0	1.1	1.1	1.1	1.1	1.1	1.1	1.1	1.1						
20.4	21.9	23.9	25.9	27.9	30.4	32.9	35.4	37.9	40.4	46.4	49.4	52.9	56.4	60.4	4.12	8.00	2.63	3.41	4.91	8.71
1.0	1.0	1.0	1.0	1.0	1.0	1.0	1.1	1.1	1.1	1.1	1.1	1.1	1.1	1.1						
24.1	25.6	27.6	29.6	31.6	34.1	36.6	39.1	41.6	44.1	50.1	53.1	56.6	60.1	64.1	2.50	5.00	1.19	1.53	2.18	3.83
1.0	1.0	1.0	1.0	1.0	1.0	1.0	1.1	1.1	1.1	1.1	1.1	1.1	1.1	1.1						
24.4	25.9	27.9	29.9	31.9	34.4	36.9	39.4	41.9	44.4	50.4	53.4	56.9	60.4	64.4	2.35	4.75	1.06	1.35	1.92	3.36
1.0	1.0	1.0	1.0	1.0	1.0	1.0	1.1	1.1	1.1	1.1	1.1	1.1	1.1	1.1						
13.1	14.7	16.7	18.7	20.8	23.3	25.8	28.4	30.9	33.4	39.4	42.4	45.9	49.5	53.5	6.90	14.00	5.01	6.49	9.30	15.73
1.0	1.0	1.0	1.0	1.0	1.0	1.0	1.0	1.1	1.1	1.1	1.1	1.1	1.1	1.1						
24.7	26.2	28.2	30.2	32.2	34.7	37.2	39.7	42.2	44.7	50.7	53.7	57.2	60.7	64.7	2.20	4.50	0.92	1.17	1.66	2.87
1.0	1.0	1.0	1.0	1.0	1.0	1.0	1.1	1.1	1.1	1.1	1.1	1.1	1.1	1.1						
13.1	14.7	16.7	18.7	20.8	23.3	25.8	28.4	30.9	33.4	39.4	42.4	45.9	49.5	53.5	6.90	14.00	5.01	6.49	9.30	15.73
1.0	1.0	1.0	1.0	1.0	1.0	1.0	1.0	1.1	1.1	1.1	1.1	1.1	1.1	1.1						
22.4	23.9	25.9	27.9	29.9	32.4	34.9	37.4	39.9	42.4	48.4	51.4	54.9	58.4	62.4	3.15	6.50	1.78	2.30	3.30	5.86
1.0	1.0	1.0	1.0	1.0	1.0	1.0	1.1	1.1	1.1	1.1	1.1	1.1	1.1	1.1						
23.8	25.3	27.3	29.3	31.3	33.8	36.3	38.8	41.4	43.9	49.9	52.9	56.4	59.9	63.9	2.50	5.30	1.19	1.53	2.18	3.84
1.0	1.0	1.0	1.0	1.0	1.0	1.0	1.1	1.1	1.1	1.1	1.1	1.1	1.1	1.1						
17.5	19.0	21.1	23.1	25.1	27.6	30.1	32.6	35.1	37.6	43.7	46.7	50.2	53.7	57.7	5.00	10.60	3.40	4.41	6.35	11.15
1.0	1.0	1.0	1.0	1.0	1.0	1.0	1.0	1.1	1.1	1.1	1.1	1.1	1.1	1.1						
24.2	25.7	27.7	29.7	31.7	34.2	36.7	39.2	41.7	44.2	50.2	53.2	56.7	60.2	64.2	2.35	5.00	1.06	1.35	1.92	3.36
1.0	1.0	1.0	1.0	1.0	1.0	1.0	1.1	1.1	1.1	1.1	1.1	1.1	1.1	1.1						
13.4	14.9	17.0	19.0	21.1	23.6	26.1	28.7	31.2	33.7	39.7	42.7	46.2	49.8	53.8	6.50	14.00	4.68	6.06	8.70	14.85
1.0	1.0	1.0	1.0	1.0	1.0	1.0	1.0	1.1	1.1	1.1	1.1	1.1	1.1	1.1						
24.5	26.0	28.0	30.0	32.0	34.5	37.0	39.5	42.0	44.5	50.5	53.5	57.0	60.5	64.5	2.20	4.75	0.92	1.18	1.66	2.88
1.0	1.0	1.0	1.0	1.0	1.0	1.0	1.1	1.1	1.1	1.1	1.1	1.1	1.1	1.1						
22.0	23.5	25.5	27.5	29.5	32.1	34.6	37.1	39.6	42.1	48.1	51.1	54.6	58.1	62.1	3.15	6.90	1.78	2.30	3.30	5.86
1.0	1.0	1.0	1.0	1.0	1.0	1.0	1.1	1.1	1.1	1.1	1.1	1.1	1.1	1.1						
20.7	22.2	24.2	26.3	28.3	30.8	33.3	35.8	38.3	40.8	46.8	49.8	53.3	56.8	60.8	3.65	8.00	2.22	2.88	4.14	7.36
1.0	1.0	1.0	1.0	1.0	1.0	1.0	1.1	1.1	1.1	1.1	1.1	1.1	1.1	1.1						
17.7	19.2	21.2	23.3	25.3	27.8	30.3	32.8	35.3	37.8	43.8	46.9	50.4	53.9	57.9	4.75	10.60	3.19	4.13	5.95	10.48
1.0	1.0	1.0	1.0	1.0	1.0	1.0	1.1	1.1	1.1	1.1	1.1	1.1	1.1	1.1						
23.6	25.1	27.1	29.1	31.1	33.6	36.1	38.6	41.1	43.6	49.6	52.6	56.1	59.6	63.6	2.50	5.60	1.19	1.53	2.19	3.84
1.0	1.0	1.0	1.0	1.0	1.0	1.0	1.1	1.1	1.1	1.1	1.1	1.1	1.1	1.1						

Arc Length Correction Factors are located beneath Center Distance Values.

WARNING! **Sheave Rim Speed in excess of 6500 feet per minute — see pg. 236

POWER-WEDGE PRE-ENGINEERED DRIVE SELECTION TABLES

3VX PRE-ENGINEERED TABLES Ratio 2.28-3.17

Driven Speed for Motor Speed of				Sheave Outside Diameters		V-Belt Number and Center Distance (Other sizes may be available, see page 214)																
870 RPM	1160 RPM	1750 RPM	3450 RPM	Small Sheave	Large Sheave	Speed Ratio	3VX 250	3VX 265	3VX 280	3VX 300	3VX 315	3VX 335	3VX 355	3VX 375	3VX 400	3VX 425	3VX 450	3VX 475	3VX 500	3VX 530	3VX 560
381	508	767	1511	2.35	5.3	2.28	6.3	7.1	7.9	8.9	9.6	10.6	11.6	12.7	13.9	15.2	16.4	17.7	18.9	20.4	21.9
				*			0.8	0.8	0.8	0.8	0.8	0.9	0.9	0.9	0.9	0.9	0.9	0.9	0.9	1.0	1.0
378	504	760	1498	2.20	5.00	2.30	6.7	7.5	8.2	9.2	10.0	11.0	12.0	13.0	14.3	15.5	16.8	18.0	19.3	20.8	22.3
				*			0.8	0.8	0.8	0.8	0.8	0.9	0.9	0.9	0.9	0.9	0.9	0.9	0.9	1.0	1.0
371	495	746	1472	6.00	14.00	2.34	—	—	—	—	—	—	—	—	—	—	—	—	—	—	11.6
							—	—	—	—	—	—	—	—	—	—	—	—	—	—	0.9
367	489	738	1455	4.50	10.60	2.37	—	—	—	—	—	—	—	—	—	—	10.2	11.5	12.8	14.3	15.8
							—	—	—	—	—	—	—	—	—	—	0.9	0.9	0.9	0.9	0.9
368	491	740	1459	10.60	25.00	2.36	—	—	—	—	—	—	—	—	—	—	—	—	—	—	—
							—	—	—	—	—	—	—	—	—	—	—	—	—	—	—
365	487	734	1447	8.00	19.00	2.38	—	—	—	—	—	—	—	—	—	—	—	—	—	—	—
							—	—	—	—	—	—	—	—	—	—	—	—	—	—	—
361	481	725	1430	2.35	5.60	2.41	6.0	6.8	7.6	8.6	9.4	10.4	11.4	12.4	13.7	14.9	16.2	17.4	18.7	20.2	21.7
				*			0.8	0.8	0.8	0.8	0.8	0.9	0.9	0.9	0.9	0.9	0.9	0.9	0.9	1.0	1.0
358	478	721	1421	2.50	6.00	2.43	—	6.3	7.1	8.1	8.9	9.8	10.9	11.9	13.2	14.5	15.7	17.0	18.2	19.7	21.3
				*			0.8	0.8	0.8	0.8	0.8	0.9	0.9	0.9	0.9	0.9	0.9	0.9	0.9	0.9	1.0
346	462	696	1373	5.60	14.00	2.51	—	—	—	—	—	—	—	—	—	—	—	—	—	—	11.9
							—	—	—	—	—	—	—	—	—	—	—	—	—	—	1.0
339	452	682	1345	3.15	8.00	2.56	—	—	—	—	—	7.6	8.7	9.7	11.0	12.3	13.5	14.8	16.1	17.6	19.1
							—	—	—	—	—	0.8	0.9	0.9	0.9	0.9	0.9	0.9	0.9	0.9	1.0
337	449	678	1336	2.20	5.60	2.58	6.1	6.9	7.7	8.7	9.5	10.5	11.5	12.5	13.8	15.0	16.3	17.5	18.8	20.3	21.8
				*			0.8	0.8	0.8	0.8	0.8	0.9	0.9	0.9	0.9	0.9	0.9	0.9	0.9	0.9	1.0
336	448	676	1334	2.35	6.00	2.59	—	6.4	7.2	8.2	9.0	10.0	11.0	12.1	13.3	14.6	15.8	17.1	18.4	19.9	21.4
				*			—	0.8	0.8	0.8	0.8	0.9	0.9	0.9	0.9	0.9	0.9	0.9	0.9	0.9	1.0
336	448	675	1331	4.12	10.60	2.59	—	—	—	—	—	—	—	—	—	9.1	10.4	11.7	13.0	14.6	16.1
				*			—	—	—	—	—	—	—	—	—	0.9	0.9	0.9	0.9	0.9	0.9
330	441	665	1310	2.50	6.50	2.63	—	—	6.6	7.7	8.4	9.5	10.5	11.5	12.8	14.0	15.3	16.6	17.8	19.3	20.8
				*			—	—	0.8	0.8	0.8	0.8	0.9	0.9	0.9	0.9	0.9	0.9	0.9	0.9	1.0
314	419	632	1247	2.20	6.00	2.77	5.7	6.5	7.3	8.3	9.1	10.1	11.1	12.2	13.4	14.7	15.9	17.2	18.5	20.0	21.5
				*			0.8	0.8	0.8	0.8	0.8	0.8	0.9	0.9	0.9	0.9	0.9	0.9	0.9	0.9	1.0
314	419	633	1247	6.90	19.00	2.77	—	—	-0.0	-0.0	-0.0	-0.0	-0.0	-0.0	-0.0	-0.0	-0.0	-0.0	-0.0	-0.0	-0.0
				*			—	—	-0.0	-0.0	-0.0	-0.0	-0.0	-0.0	-0.0	-0.0	-0.0	-0.0	-0.0	-0.0	-0.0
311	415	626	1234	2.50	6.90	2.80	—	—	6.2	7.3	8.1	9.1	10.1	11.2	12.4	13.7	15.0	16.2	17.5	19.0	20.5
				*			—	—	0.8	0.8	0.8	0.8	0.9	0.9	0.9	0.9	0.9	0.9	0.9	0.9	1.0
310	414	624	1230	2.35	6.50	2.80	—	5.9	6.7	7.8	8.5	9.6	10.6	11.6	12.9	14.1	15.4	16.7	17.9	19.4	20.9
				*			—	0.8	0.8	0.8	0.8	0.8	0.9	0.9	0.9	0.9	0.9	0.9	0.9	0.9	1.0
309	412	621	1224	5.00	14.00	2.82	—	—	—	—	—	—	—	—	—	—	—	—	—	—	12.3
							—	—	—	—	—	—	—	—	—	—	—	—	—	—	0.9
297	396	597	1177	3.65	10.60	2.93	—	—	—	—	—	—	—	—	—	9.4	10.7	12.1	13.4	14.9	16.4
							—	—	—	—	—	—	—	—	—	0.9	0.9	0.9	0.9	0.9	0.9
296	395	596	1174	6.50	19.00	2.94	—	—	—	—	—	—	—	—	—	—	—	—	—	—	—
							—	—	—	—	—	—	—	—	—	—	—	—	—	—	—
292	389	588	1158	2.35	6.90	2.98	—	—	6.3	7.4	8.2	9.2	10.2	11.3	12.5	13.8	15.1	16.3	17.6	19.1	20.6
				*			—	—	0.8	0.8	0.8	0.8	0.9	0.9	0.9	0.9	0.9	0.9	0.9	0.9	1.0
293	391	590	1162	4.75	14.00	2.97	—	—	—	—	—	—	—	—	—	—	—	—	—	—	12.4
							—	—	—	—	—	—	—	—	—	—	—	—	—	—	0.9
290	387	583	1150	2.20	6.50	3.00	—	6.0	6.8	7.9	8.6	9.7	10.7	11.7	13.0	14.3	15.5	16.8	18.0	19.5	21.1
				*			—	0.8	0.8	0.8	0.8	0.8	0.9	0.9	0.9	0.9	0.9	0.9	0.9	0.9	1.0
278	370	558	1101	4.50	14.00	3.13	—	—	—	—	—	—	—	—	—	—	—	—	—	10.9	12.6
							—	—	—	—	—	—	—	—	—	—	—	—	—	0.9	0.9
277	370	558	1099	8.00	25.00	3.14	—	—	—	—	—	—	—	—	—	—	—	—	—	—	—
							—	—	—	—	—	—	—	—	—	—	—	—	—	—	—
273	364	549	1083	2.20	6.90	3.19	—	—	6.4	7.5	8.3	9.3	10.3	11.4	12.6	13.9	15.2	16.4	17.7	19.2	20.7
				*			—	—	0.8	0.8	0.8	0.8	0.9	0.9	0.9	0.9	0.9	0.9	0.9	0.9	1.0
274	366	552	1088	10.60	33.50	3.17	—	—	—	—	—	—	—	—	—	—	—	—	—	—	—
							—	—	—	—	—	—	—	—	—	—	—	—	—	—	—

*Use only Power-Wedge Cog-Belt with these diameters. Arc Length Correction Factors are located beneath Center Distance Values.

POWER-WEDGE PRE-ENGINEERED DRIVE SELECTION TABLES

3VX PRE-ENGINEERED TABLES Ratio 2.28-3.17

V-Belt Number and Center Distance (Other sizes may be available, see page 214)															Sheave Datum Diameters		Rated HP per Belt (includes Added HP for Speed Ratio) RPM of Small Sheave			
3VX 600	3VX 630	3VX 670	3VX 710	3VX 750	3VX 800	3VX 850	3VX 900	3VX 950	3VX 1000	3VX 1120	3VX 1180	3VX 1250	3VX 1320	3VX 1400	Small Sheave	Large Sheave	870 RPM	1160 RPM	1750 RPM	3450 RPM
23.9	25.4	27.5	29.5	31.5	34.0	36.5	39.0	41.5	44.0	50.0	53.0	56.5	60.0	64.0	2.35	5.30	1.06	1.36	1.93	3.37
1.0	1.0	1.0	1.0	1.0	1.0	1.0	1.1	1.1	1.1	1.1	1.1	1.1	1.1	1.1						
24.3	25.8	27.8	29.8	31.8	34.3	36.8	39.3	41.8	44.3	50.3	53.3	56.8	60.3	64.3	2.20	5.00	0.92	1.18	1.66	2.88
1.0	1.0	1.0	1.0	1.0	1.0	1.0	1.0	1.1	1.1	1.1	1.1	1.1	1.1	1.1						
13.7	15.3	17.3	19.4	21.4	24.0	26.5	29.0	31.5	34.1	40.1	43.1	46.6	50.1	54.1	6.00	14.00	4.26	5.52	7.93	13.69
0.9	1.0	1.0	1.0	1.0	1.0	1.0	1.0	1.0	1.1	1.1	1.1	1.1	1.1	1.1						
17.9	19.4	21.4	23.4	25.5	28.0	30.5	33.0	35.5	38.0	44.0	47.0	50.5	54.1	58.1	4.50	10.60	2.97	3.85	5.54	9.80
1.0	1.0	1.0	1.0	1.0	1.0	1.0	1.0	1.1	1.1	1.1	1.1	1.1	1.1	1.1						
—	—	—	—	—	—	—	—	—	20.8	27.1	30.2	33.8	37.3	41.4	10.60	25.00	8.02	10.33	14.51	**
—	—	—	—	—	—	—	—	—	1.0	1.1	1.1	1.1	1.1	1.1						
—	—	—	—	15.3	18.0	20.6	23.1	25.7	28.3	34.4	37.4	40.9	44.5	48.5	8.00	19.00	5.93	7.66	10.94	**
—	—	—	—	1.0	1.0	1.0	1.0	1.0	1.0	1.1	1.1	1.1	1.1	1.1						
23.7	25.2	27.2	29.2	31.2	33.7	36.2	38.7	41.2	43.7	49.7	52.7	56.2	59.7	63.7	2.35	5.60	1.06	1.36	1.93	3.37
1.0	1.0	1.0	1.0	1.0	1.0	1.0	1.0	1.1	1.1	1.1	1.1	1.1	1.1	1.1						
23.3	24.8	26.8	28.8	30.8	33.3	35.8	38.3	40.8	43.3	49.3	52.3	55.8	59.3	63.3	2.50	6.00	1.20	1.54	2.19	3.85
1.0	1.0	1.0	1.0	1.0	1.0	1.0	1.1	1.1	1.1	1.1	1.1	1.1	1.1	1.1						
14.0	15.5	17.6	19.7	21.7	24.2	26.8	29.3	31.8	34.3	40.4	43.4	46.9	50.4	54.4	5.60	14.00	3.92	5.08	7.31	12.71
0.9	1.0	1.0	1.0	1.0	1.0	1.0	1.0	1.0	1.1	1.1	1.1	1.1	1.1	1.1						
21.1	22.6	24.6	26.6	28.6	31.1	33.7	36.2	38.7	41.2	47.2	50.2	53.7	57.2	61.2	3.15	8.00	1.78	2.30	3.30	5.87
1.0	1.0	1.0	1.0	1.0	1.0	1.0	1.0	1.1	1.1	1.1	1.1	1.1	1.1	1.1						
23.8	25.3	27.3	29.3	31.3	33.8	36.3	38.8	41.3	43.8	49.8	52.8	56.3	59.8	63.9	2.20	5.60	0.92	1.18	1.67	2.89
1.0	1.0	1.0	1.0	1.0	1.0	1.0	1.1	1.1	1.1	1.1	1.1	1.1	1.1	1.1						
23.4	24.9	26.9	28.9	30.9	33.4	35.9	38.4	40.9	43.4	49.4	52.4	55.9	59.4	63.4	2.35	6.00	1.06	1.36	1.93	3.37
1.0	1.0	1.0	1.0	1.0	1.0	1.0	1.1	1.1	1.1	1.1	1.1	1.1	1.1	1.1						
18.1	19.7	21.7	23.7	25.7	28.3	30.8	33.3	35.8	38.3	44.3	47.3	50.8	54.3	58.3	4.12	10.60	2.64	3.42	4.92	8.74
1.0	1.0	1.0	1.0	1.0	1.0	1.0	1.0	1.1	1.1	1.1	1.1	1.1	1.1	1.1						
22.8	24.3	26.4	28.4	30.4	32.9	35.4	37.9	40.4	42.9	48.9	51.9	55.4	58.9	62.9	2.50	6.50	1.20	1.54	2.19	3.85
1.0	1.0	1.0	1.0	1.0	1.0	1.0	1.1	1.1	1.1	1.1	1.1	1.1	1.1	1.1						
23.5	25.0	27.0	29.0	31.0	33.5	36.0	38.5	41.0	43.5	49.5	52.5	56.0	59.5	63.5	2.20	6.00	0.92	1.18	1.67	2.89
—	—	—	—	16.0	18.7	21.3	23.9	26.5	29.0	35.1	1.1	1.1	1.1	1.1						
—	—	—	—	1.0	1.0	1.0	1.0	1.0	1.0	1.1	38.2	41.7	45.3	49.3	6.90	19.00	5.02	6.50	9.31	15.75
22.5	24.0	26.0	28.0	30.0	32.5	35.0	37.6	40.1	42.6	48.6	1.1	1.1	1.1	1.1						
1.0	1.0	1.0	1.0	1.0	1.0	1.0	1.1	1.1	1.1	1.1	51.6	55.1	58.6	62.6	2.50	6.90	1.20	1.54	2.19	3.85
23.0	24.5	26.5	28.5	30.5	33.0	35.5	38.0	40.5	43.0	49.0	1.1	1.1	1.1	1.1						
1.0	1.0	1.0	1.0	1.0	1.0	1.0	1.1	1.1	1.1	1.1	52.0	55.5	59.0	63.0	2.35	6.50	1.06	1.36	1.93	3.38
14.4	15.9	18.0	20.1	22.1	24.7	27.2	29.7	32.3	34.8	40.8	1.1	1.1	1.1	1.1						
0.9	1.0	1.0	1.0	1.0	1.0	1.0	1.0	1.0	1.1	1.1	43.8	47.4	50.9	54.9	5.00	14.00	3.41	4.41	6.36	11.16
18.5	20.0	22.0	24.1	26.1	28.6	31.1	33.6	36.1	38.7	44.7	1.1	1.1	1.1	1.1						
1.0	1.0	1.0	1.0	1.0	1.0	1.0	1.0	1.1	1.1	1.1	47.7	51.2	54.7	58.7	3.65	10.60	2.23	2.88	4.15	7.38
—	—	—	—	16.3	18.9	21.6	24.2	26.7	29.3	35.4	1.1	1.1	1.1	1.1						
—	—	—	—	1.0	1.0	1.0	1.0	1.0	1.0	1.1	38.5	42.0	45.5	49.6	6.50	19.00	4.68	6.07	8.71	14.87
22.6	245.1	26.1	28.1	30.1	32.7	35.2	37.7	40.2	42.7	48.7	1.1	1.1	1.1	1.1						
1.0	1.0	1.0	1.0	1.0	1.0	1.0	1.0	1.1	1.1	1.1	51.7	55.2	58.7	62.7	2.35	6.90	1.06	1.36	1.93	3.38
14.5	16.1	18.2	20.2	22.3	24.8	217.4	29.9	32.4	35.0	41.0	1.1	1.1	1.1	1.1						
0.9	1.0	1.0	1.0	1.0	1.0	1.0	1.0	1.0	1.1	1.1	44.0	47.5	51.1	55.1	4.75	14.00	3.19	4.13	5.95	10.49
23.1	24.6	26.6	28.6	30.6	33.1	35.6	38.1	40.6	43.1	49.1	1.1	1.1	1.1	1.1						
1.0	1.0	1.0	1.0	1.0	1.0	1.0	1.1	1.1	1.1	1.1	52.1	55.6	59.1	63.1	2.20	6.50	0.92	1.18	1.67	2.90
14.7	16.3	18.4	20.4	225	25.0	27.6	30.1	32.6	35.1	41.2	1.1	1.1	1.1	1.1						
0.9	1.0	1.0	1.0	1.0	1.0	1.0	1.0	1.0	1.1	1.1	44.2	47.7	51.3	55.3	4.50	14.00	2.97	3.85	5.55	9.81
—	—	—	—	—	—	—	—	19.8	22.5	28.8	1.1	1.1	1.1	1.1						
—	—	—	—	—	—	—	—	1.0	1.0	1.1	32.0	35.6	39.2	43.2	8.00	25.00	5.93	7.67	10.94	**
22.7	24.2	26.2	28.3	30.3	32.8	35.3	37.8	40.3	42.8	48.8	1.1	1.1	1.1	1.1						
1.0	1.0	1.0	1.0	1.0	1.0	1.0	1.0	1.1	1.1	1.1	51.8	55.3	58.8	62.8	2.20	6.90	0.92	1.18	1.67	2.90
—	—	—	—	—	—	—	—	—	—	—	1.1	1.1	1.1	1.1						
—	—	—	—	—	—	—	—	—	—	—	—	25.3	29.1	33.4	10.60	33.50	8.02	10.33	14.52	**
											—	1.1	1.1	1.1						

Arc Length Correction Factors are located beneath Center Distance Values.

⚠**WARNING!** **Sheave Rim Speed in excess of 6500 feet per minute — see pg. 236

POWER-WEDGE PRE-ENGINEERED DRIVE SELECTION TABLES

3VX PRE-ENGINEERED TABLES Ratio 3.18-5.62

Driven Speed for Motor Speed of				Sheave Outside Diameters		V-Belt Number and Center Distance (Other sizes may be available, see page 214)																
870 RPM	1160 RPM	1750 RPM	3450 RPM	Small Sheave	Large Sheave	Speed Ratio	3VX 250	3VX 265	3VX 280	3VX 300	3VX 315	3VX 335	3VX 355	3VX 375	3VX 400	3VX 425	3VX 450	3VX 475	3VX 500	3VX 530	3VX 560
273	364	549	1083	6.00	19.00	3.18	— —	— —	— —	— —	— —	— —	— —	— —	— —	— —	— —	— —	— —	— —	— —
268	357	539	1063	2.50	8.00	3.24	— —	— —	— —	— —	7.0 0.8	8.0 0.8	9.1 0.8	10.1 0.9	11.4 0.9	12.7 0.9	14.0 0.9	15.3 0.9	16.5 0.9	18.0 0.9	19.6 0.9
256	341	514	1014	3.15 *	10.60	3.40	— —	— —	— —	— —	— —	— —	— —	— —	— —	9.7 0.9	11.1 0.9	12.4 0.9	13.7 0.9	15.2 0.9	16.8 0.9
255	340	513	1010	5.60	19.00	3.41	— —	— —	— —	— —	— —	— —	— —	— —	— —	— —	— —	— —	— —	— —	— —
254	338	511	1007	4.12	14.00	3.43	— —	— —	— —	— —	— —	— —	— —	— —	— —	— —	— —	— —	— —	11.2 0.9	12.8 0.9
252	336	506	998	2.35 *	8.00	3.457	— —	— —	— —	— —	7.1 0.8	8.1 0.8	9.2 0.8	10.2 0.9	11.5 0.9	12.8 0.9	14.1 0.9	15.4 0.9	16.6 0.9	18.2 0.9	19.7 0.9
239	318	480	947	6.90	25.00	3.64	— —	— —	— —	— —	— —	— —	— —	— —	— —	— —	— —	— —	— —	— —	— —
235	314	473	933	2.20 *	8.00	3.70	— —	— —	— —	— —	7.2 0.8	8.2 0.8	9.3 0.8	10.3 0.9	11.6 0.9	12.9 0.9	14.2 0.9	15.5 0.9	16.7 0.9	18.3 0.9	19.8 0.9
227	303	457	901	5.00	19.00	3.83	— —	— —	— —	— —	— —	— —	— —	— —	— —	— —	— —	— —	— —	— —	— —
225	299	452	890	3.65	14.00	3.88	— —	— —	— —	— —	— —	— —	— —	— —	— —	— —	— —	— —	— —	11.5 0.9	13.1 0.9
225	300	452	892	6.50	25.00	3.87	— —	— —	— —	— —	— —	— —	— —	— —	— —	— —	— —	— —	— —	— —	— —
216	288	434	856	4.75	19.00	4.03	— —	— —	— —	— —	— —	— —	— —	— —	— —	— —	— —	— —	— —	— —	— —
207	277	417	823	6.00	25.00	4.19	— —	— —	— —	— —	— —	— —	— —	— —	— —	— —	— —	— —	— —	— —	— —
207	276	416	820	8.00	33.50	4.21	— —	— —	— —	— —	— —	— —	— —	— —	— —	— —	— —	— —	— —	— —	— —
204	272	411	810	4.50	19.00	4.26	— —	— —	— —	— —	— —	— —	— —	— —	— —	— —	— —	— —	— —	— —	— —
202	269	406	801	2.50 *	10.60	4.31	— —	— —	— —	— —	— —	— —	— —	— —	8.8 0.9	10.2 0.9	11.5 0.9	12.8 0.9	14.1 0.9	15.7 0.9	17.2 0.9
193	258	389	767	3.15	14.00	4.50	— —	— —	— —	— —	— —	— —	— —	— —	— —	— —	— —	— —	— —	11.8 0.9	13.4 0.9
194	258	389	767	5.60	25.00	4.50	— —	— —	— —	— —	— —	— —	— —	— —	— —	— —	— —	— —	— —	— —	— —
190	253	382	752	2.35 *	10.6	4.587	— —	— —	— —	— —	— —	— —	— —	— —	8.9 0.8	10.2 0.9	11.6 0.9	12.9 0.9	14.2 0.9	15.8 0.9	17.3 0.9
187	249	376	741	4.12	19.00	4.66	— —	— —	— —	— —	— —	— —	— —	— —	— —	— —	— —	— —	— —	— —	— —
177	236	357	703	2.20 *	10.60	4.91	— —	— —	— —	— —	— —	— —	— —	— —	9.0 0.8	10.3 0.9	11.7 0.9	13.0 0.9	14.3 0.9	15.9 0.9	17.4 0.9
178	238	358	707	6.90	33.50	4.88	— —	— —	— —	— —	— —	— —	— —	— —	— —	— —	— —	— —	— —	— —	— —
173	230	347	684	5.00	25.00	5.04	— —	— —	— —	— —	— —	— —	— —	— —	— —	— —	— —	— —	— —	— —	— —
168	224	337	665	6.50	33.50	5.19	— —	— —	— —	— —	— —	— —	— —	— —	— —	— —	— —	— —	— —	— —	— —
165	220.	332	655	3.65	19.00	5.26	— —	— —	— —	— —	— —	— —	— —	— —	— —	— —	— —	— —	— —	— —	— —
164	219	330	650	4.75	25.00	5.31	— —	— —	— —	— —	— —	— —	— —	— —	— —	— —	— —	— —	— —	— —	— —
155	207	312	615	4.50	25.00	5.61	— —	— —	— —	— —	— —	— —	— —	— —	— —	— —	— —	— —	— —	— —	— —
155	206	311	614	6.00	33.50	5.62	— —	— —	— —	— —	— —	— —	— —	— —	— —	— —	— —	— —	— —	— —	— —

*Use only Power-Wedge Cog-Belt with these diameters. Arc Length Correction Factors are located beneath Center Distance Values.

POWER-WEDGE PRE-ENGINEERED DRIVE SELECTION TABLES

3VX PRE-ENGINEERED TABLES Ratio 3.18-5.62

V-Belt Number and Center Distance (Other sizes may be available, see page 214)															Sheave Datum Diameters		Rated HP per Belt (includes Added HP for Speed Ratio) RPM of Small Sheave			
3VX 600	3VX 630	3VX 670	3VX 710	3VX 750	3VX 800	3VX 850	3VX 900	3VX 950	3VX 1000	3VX 1120	3VX 1180	3VX 1250	3VX 1320	3VX 1400	Small Sheave	Large Sheave	870 RPM	1160 RPM	1750 RPM	3450 RPM
—	—	—	14.4	16.6	19.3	21.9	24.5	27.1	29.7	35.8	38.8	42.4	45.9	49.9	6.00	19.00	4.26	5.52	7.94	13.70
—	—	—	1.0	1.0	1.0	1.0	1.0	1.0	1.0	1.1	1.1	1.1	1.1	1.1						
21.6	23.1	25.1	27.1	29.1	31.6	34.1	36.7	39.2	41.7	47.7	50.7	54.2	57.7	61.7	2.50	8.00	1.20	1.54	2.19	3.86
1.0	1.0	1.0	1.0	1.0	1.0	1.0	1.0	1.1	1.1	1.1	1.1	1.1	1.1	1.1						
18.8	20.4	22.4	24.4	26.4	29.0	31.5	34.0	36.5	39.0	45.0	48.1	51.6	55.1	59.1	3.15	10.60	1.78	2.30	3.31	5.88
1.0	1.0	1.0	1.0	1.0	1.0	1.0	1.0	1.1	1.1	1.1	1.1	1.1	1.1	1.1						
—	—	—	14.6	16.8	19.5	22.2	24.8	27.4	29.9	36.1	39.1	42.7	46.2	50.2	5.60	19.00	3.92	5.08	7.31	12.72
—	—	—	1.0	1.0	1.0	1.0	1.0	1.0	1.0	1.1	1.1	1.1	1.1	1.1						
15.0	16.5	18.6	20.7	22.7	25.3	27.8	30.4	32.9	35.4	41.5	44.5	48.0	51.5	55.5	4.12	14.00	2.64	3.42	4.93	8.74
0.9	1.0	1.0	1.0	1.0	1.0	1.0	1.0	1.0	1.1	1.1	1.1	1.1	1.1	1.1						
21.7	23.2	25.2	27.2	29.2	31.7	34.3	36.8	39.3	41.8	47.8	50.8	54.3	57.8	61.8	2.35	8.00	1.06	1.36	1.93	3.38
1.0	1.0	1.0	1.0	1.0	1.0	1.0	1.0	1.1	1.1	1.1	1.1	1.1	1.1	1.1						
—	—	—	—	—	—	—	17.6	20.4	23.2	29.6	32.7	36.3	39.9	44.0	6.90	25.00	5.02	6.50	9.32	15.76
—	—	—	—	—	—	—	1.0	1.0	1.0	1.1	1.1	1.1	1.1	1.1						
21.8	28.3	25.3	27.3	29.3	31.9	34.4	36.9	39.4	41.9	47.9	50.9	54.4	57.9	61.9	2.20	8.00	0.93	1.18	1.67	2.90
1.0	1.0	1.0	1.0	1.0	1.0	1.0	1.0	1.1	1.1	1.1	1.1	1.1	1.1	1.1						
—	—	—	15.0	17.2	19.9	22.6	25.2	27.8	30.3	36.5	39.5	43.1	46.6	50.7	5.00	19.00	3.41	4.42	6.36	11.17
—	—	—	1.0	1.0	1.0	1.0	1.0	1.0	1.0	1.1	1.1	1.1	1.1	1.1						
15.3	16.8	18.9	21.0	23.1	25.6	28.2	30.7	33.2	35.8	41.8	44.8	48.4	51.9	55.9	3.65	14.00	2.23	2.89	4.15	7.38
0.9	0.9	1.0	1.0	1.0	1.0	1.0	1.0	1.0	1.1	1.1	1.1	1.1	1.1	1.1						
—	—	—	—	—	—	—	17.9	20.7	23.4	29.8	33.0	36.6	40.2	44.3	6.50	25.00	4.68	6.07	8.71	14.88
—	—	—	—	—	—	—	1.0	1.0	1.0	1.1	1.1	1.1	1.1	1.1						
—	—	—	15.2	17.4	20.1	22.7	25.3	27.9	30.5	36.7	39.7	43.3	46.8	50.8	4.75	19.00	3.19	4.14	5.96	10.50
—	—	—	1.0	1.0	1.0	1.0	1.0	1.0	1.0	1.1	1.1	1.1	1.1	1.1						
—	—	—	—	—	—	—	18.2	21.0	23.8	30.2	33.3	36.9	40.5	44.6	6.00	25.00	4.26	5.52	7.94	13.71
—	—	—	—	—	—	—	1.0	1.0	1.0	1.0	1.1	1.1	1.1	1.1						
—	—	—	—	—	—	—	—	—	—	—	22.8	26.9	30.8	35.1	8.00	33.50	5.93	7.67	10.94	**
—	—	—	—	—	—	—	—	—	—	—	1.0	1.1	1.1	1.1						
—	—	—	15.3	17.5	20.2	22.9	25.5	28.1	30.7	36.8	39.9	43.4	47.0	51.0	4.50	19.00	2.98	3.85	5.55	9.82
—	—	—	1.0	1.0	1.0	1.0	1.0	1.0	1.0	1.1	1.1	1.1	1.1	1.1						
19.3	20.8	22.9	24.9	26.9	29.4	32.0	34.5	37.0	39.5	45.5	48.5	52.1	55.6	59.6	2.50	10.60	1.20	1.54	2.20	3.86
0.9	1.0	1.0	1.0	1.0	1.0	1.0	1.0	1.0	1.1	1.1	1.1	1.1	1.1	1.1						
15.6	17.2	19.3	21.3	23.4	26.0	28.5	31.3	33.6	36.1	42.2	45.2	48.7	52.2	56.3	3.15	14.00	1.79	2.31	3.31	5.89
0.9	0.9	1.0	1.0	1.0	1.0	1.0	1.0	1.0	1.0	1.1	1.1	1.1	1.1	1.1						
—	—	—	—	—	—	—	18.4	21.3	24.0	30.4	33.6	37.2	40.8	44.9	5.60	25.00	3.92	5.08	7.31	12.72
—	—	—	—	—	—	—	1.0	1.0	1.0	1.0	1.1	1.1	1.1	1.1						
19.4	20.9	23.0	25.0	27.0	29.5	32.1	34.6	37.1	39.6	45.6	48.7	52.2	55.7	59.7	2.35	10.60	1.06	1.36	1.94	3.39
0.9	1.0	1.0	1.0	1.0	1.0	1.0	1.0	1.0	1.1	1.1	1.1	1.1	1.1	1.1						
—	—	13.3	15.6	17.8	20.5	23.1	25.8	28.4	30.9	37.1	40.2	43.7	47.3	51.3	4.12	19.00	2.64	3.42	4.93	8.75
—	—	0.9	1.0	1.0	1.0	1.0	1.0	1.0	1.0	1.1	1.1	1.1	1.1	1.1						
19.5	21.0	23.1	25.1	27.1	29.6	32.2	34.7	37.2	39.7	45.8	48.8	52.3	55.8	59.8	2.20	10.60	0.93	1.18	1.67	2.91
0.9	1.0	1.0	1.0	1.0	1.0	1.0	1.0	1.0	1.1	1.1	1.1	1.1	1.1	1.1						
—	—	—	—	—	—	—	—	—	—	—	23.5	27.6	31.5	35.8	6.90	33.50	5.02	6.50	9.32	15.76
—	—	—	—	—	—	—	—	—	—	—	1.0	1.1	1.1	1.1						
—	—	—	—	—	—	—	18.8	21.6	24.4	308	34.0	37.6	41.2	45.3	5.00	25.00	3.41	4.42	6.36	11.17
—	—	—	—	—	—	—	1.0	1.0	1.0	1.0	1.1	1.1	1.1	1.1						
—	—	—	—	—	—	—	—	—	—	—	23.7	27.8	31.7	36.1	6.50	33.50	4.68	6.07	8.71	14.88
—	—	—	—	—	—	—	—	—	—	—	1.0	1.1	1.1	1.1						
—	—	13.5	15.9	18.1	20.8	23.5	26.1	28.7	31.3	37.4	40.5	44.0	47.6	51.6	3.65	19.00	2.23	2.89	4.15	7.39
—	—	0.9	0.9	1.0	1.0	1.0	1.0	1.0	1.0	1.1	1.1	1.1	1.1	1.1						
—	—	—	—	—	—	—	18.9	21.8	24.5	31.0	34.1	37.8	41.4	45.5	4.75	25.00	3.19	4.14	5.96	10.50
—	—	—	—	—	—	—	1.0	1.0	1.0	1.0	1.1	1.1	1.1	1.1						
—	—	—	—	—	—	—	19.1	21.9	24.7	31.1	34.3	37.9	41.6	45.7	4.50	25.00	2.98	38.86	5.55	9.82
—	—	—	—	—	—	—	1.0	1.0	1.0	1.0	1.1	1.1	1.1	1.1						
—	—	—	—	—	—	—	—	—	—	—	24.0	28.1	32.0	36.4	6.00	33.50	4.26	5.52	7.94	13.71
—	—	—	—	—	—	—	—	—	—	—	1.0	1.0	1.1	1.1						

Arc Length Correction Factors are located beneath Center Distance Values.

⚠ **WARNING!** **Sheave Rim Speed in excess of 6500 feet per minute — see pg. 236

POWER-WEDGE PRE-ENGINEERED DRIVE SELECTION TABLES

3VX PRE-ENGINEERED TABLES Ratio 5.69-15.56

Driven Speed for Motor Speed of				Sheave Outside Diameters		V-Belt Number and Center Distance (Other sizes may be available, see page 214)																
870 RPM	1160 RPM	1750 RPM	3450 RPM	Small Sheave	Large Sheave	Speed Ratio	3VX 250	3VX 265	3VX 280	3VX 300	3VX 315	3VX 335	3VX 355	3VX 375	3VX 400	3VX 425	3VX 450	3VX 475	3VX 500	3VX 530	3VX 560
153	204	307	606	2.50	14.00	5.69	—	—	—	—	—	—	—	—	—	—	—	—	10.5	12.2	13.8
				*			—	—	—	—	—	—	—	—	—	—	—	—	0.9	0.9	0.9
143	191	289	569	2.35	14.00	6.07	—	—	—	—	—	—	—	—	—	—	—	—	10.6	12.3	13.9
							—	—	—	—	—	—	—	—	—	—	—	—	0.9	0.9	0.9
144	192	290	572	5.60	33.50	6.03	—	—	—	—	—	—	—	—	—	—	—	—	—	—	—
							—	—	—	—	—	—	—	—	—	—	—	—	—	—	—
142	190	286	564	3.15	19.00	6.11	—	—	—	—	—	—	—	—	—	—	—	—	—	—	—
							—	—	—	—	—	—	—	—	—	—	—	—	—	—	—
142	189	285	563	4.12	25.00	6.13	—	—	—	—	—	—	—	—	—	—	—	—	—	—	—
							—	—	—	—	—	—	—	—	—	—	—	—	—	—	—
134	179	270	532	2.20	14.00	6.49	—	—	—	—	—	—	—	—	—	—	—	—	10.6	12.4	14.0
				*			—	—	—	—	—	—	—	—	—	—	—	—	0.9	0.9	0.9
129	172	259	511	5.00	33.50	6.76	—	—	—	—	—	—	—	—	—	—	—	—	—	—	—
							—	—	—	—	—	—	—	—	—	—	—	—	—	—	—
126	167	253	498	3.65	25.00	6.93	—	—	—	—	—	—	—	—	—	—	—	—	—	—	—
							—	—	—	—	—	—	—	—	—	—	—	—	—	—	—
122	163	246	485	4.75	33.50	7.12	—	—	—	—	—	—	—	—	—	—	—	—	—	—	—
							—	—	—	—	—	—	—	—	—	—	—	—	—	—	—
116	154	233	459	4.50	33.50	7.52	—	—	—	—	—	—	—	—	—	—	—	—	—	—	—
							—	—	—	—	—	—	—	—	—	—	—	—	—	—	—
112	150	226	446	2.50	19.00	7.73	—	—	—	—	—	—	—	—	—	—	—	—	—	—	—
				*			—	—	—	—	—	—	—	—	—	—	—	—	—	—	—
108	144	217	429	3.15	25.00	8.05	—	—	—	—	—	—	—	—	—	—	—	—	—	—	—
							—	—	—	—	—	—	—	—	—	—	—	—	—	—	—
106	141	212	419	2.35	19.00	8.239	—	—	—	—	—	—	—	—	—	—	—	—	—	—	—
				*			—	—	—	—	—	—	—	—	—	—	—	—	—	—	—
106	141	213	420	4.12	33.50	8.22	—	—	—	—	—	—	—	—	—	—	—	—	—	—	—
							—	—	—	—	—	—	—	—	—	—	—	—	—	—	—
99	132	199	391	2.20	19.00	8.81	—	—	—	—	—	—	—	—	—	—	—	—	—	—	—
				*			—	—	—	—	—	—	—	—	—	—	—	—	—	—	—
94	125	188	371	3.65	33.50	9.29	—	—	—	—	—	—	—	—	—	—	—	—	—	—	—
							—	—	—	—	—	—	—	—	—	—	—	—	—	—	—
85	114	172	339	2.50	25.00	10.18	—	—	—	—	—	—	—	—	—	—	—	—	—	—	—
				*			—	—	—	—	—	—	—	—	—	—	—	—	—	—	—
81	108	162	320	3.15	33.50	10.79	—	—	—	—	—	—	—	—	—	—	—	—	—	—	—
							—	—	—	—	—	—	—	—	—	—	—	—	—	—	—
80	107	161	318	2.35	25.00	10.85	—	—	—	—	—	—	—	—	—	—	—	—	—	—	—
				*			—	—	—	—	—	—	—	—	—	—	—	—	—	—	—
75	100	151	297	2.20	25.00	11.60	—	—	—	—	—	—	—	—	—	—	—	—	—	—	—
				*			—	—	—	—	—	—	—	—	—	—	—	—	—	—	—
64	85	128	253	2.50	33.50	13.65	—	—	—	—	—	—	—	—	—	—	—	—	—	—	—
				*			—	—	—	—	—	—	—	—	—	—	—	—	—	—	—
60	80	120	237	2.35	33.50	14.54	—	—	—	—	—	—	—	—	—	—	—	—	—	—	—
				*			—	—	—	—	—	—	—	—	—	—	—	—	—	—	—
56	75	112	222	2.20	33.50	15.56	—	—	—	—	—	—	—	—	—	—	—	—	—	—	—
				*			—	—	—	—	—	—	—	—	—	—	—	—	—	—	—

*Use only Power-Wedge Cog-Belt with these diameters. Arc Length Correction Factors are located beneath Center Distance Values.

POWER-WEDGE PRE-ENGINEERED DRIVE SELECTION TABLES

3VX PRE-ENGINEERED TABLES Ratio 5.69-15.56

V-Belt Number and Center Distance (Other sizes may be available, see page 214)															Sheave Datum Diameters		Rated HP per Belt (includes Added HP for Speed Ratio) RPM of Small Sheave			
3VX 600	3VX 630	3VX 670	3VX 710	3VX 750	3VX 800	3VX 850	3VX 900	3VX 950	3VX 1000	3VX 1120	3VX 1180	3VX 1250	3VX 1320	3VX 1400	Small Sheave	Large Sheave	870 RPM	1160 RPM	1750 RPM	3450 RPM
16.0	17.6	19.7	21.8	23.8	26.4	29.0	31.5	34.1	36.6	42.7	45.7	49.2	52.7	56.7	2.50	14.00	1.20	1.54	2.20	3.87
0.9	0.9	1.0	1.0	1.0	1.0	1.0	1.0	1.0	1.0	1.1	1.1	1.1	1.1	1.1						
16.1	17.7	19.8	21.9	24.0	26.5	29.1	31.6	34.2	36.7	42.8	45.8	49.3	52.8	56.9	2.35	14.00	1.06	1.36	1.94	3.39
0.9	0.9	1.0	1.0	1.0	1.0	1.0	1.0	1.0	1.0	1.1	1.1	1.1	1.1	1.1						
—	—	—	—	—	—	—	—	—	—	—	24.3	28.4	32.3	36.6	5.60	33.50	3.92	5.08	7.32	12.73
—	—	—	—	—	—	—	—	—	—	—	1.0	1.0	1.1	1.1						
—	—	13.8	16.2	18.4	21.1	23.8	26.4	29.0	31.6	37.8	40.8	44.4	47.9	52.0	3.15	19.00	1.79	2.31	3.31	5.89
—	—	0.9	0.9	1.0	1.0	1.0	1.0	1.0	1.0	1.1	1.1	1.1	1.1	1.1						
—	—	—	—	—	—	16.3	19.3	22.2	24.9	31.4	34.6	38.2	41.8	45.9	4.12	25.00	2.64	3.42	4.93	8.75
—	—	—	—	—	—	1.0	1.0	1.0	1.0	1.0	1.1	1.1	1.1	1.1						
16.2	17.8	19.9	22.0	24.1	26.6	29.2	31.7	34.3	36.8	42.9	45.9	49.4	52.9	57.0	2.20	14.00	0.93	1.18	1.68	2.91
0.9	0.9	1.0	1.0	1.0	1.0	1.0	1.0	1.0	1.0	1.1	1.1	1.1	1.1	1.1						
—	—	—	—	—	—	—	—	—	—	20.9	24.6	28.7	32.7	37.0	5.00	33.50	3.41	4.42	6.36	11.18
—	—	—	—	—	—	—	—	—	—	1.0	1.0	1.0	1.1	1.1						
—	—	—	—	—	—	16.6	19.6	22.5	25.2	31.7	34.9	38.5	42.1	46.3	3.65	25.00	2.23	2.89	4.15	7.39
—	—	—	—	—	—	1.0	1.0	1.0	1.0	1.0	1.1	1.1	1.1	1.1						
—	—	—	—	—	—	—	—	—	—	21.1	24.8	28.9	32.8	37.2	4.75	33.50	3.19	4.14	5.96	10.51
—	—	—	—	—	—	—	—	—	—	1.0	1.0	1.0	1.1	1.1						
—	—	—	—	—	—	—	—	—	—	21.2	24.9	29.0	33.0	37.3	4.50	33.50	2.98	3.86	5.56	9.82
—	—	—	—	—	—	—	—	—	—	1.0	1.0	1.0	1.1	1.1						
—	—	14.2	16.6	18.8	21.5	24.2	26.8	29.5	32.1	38.2	41.3	44.9	48.4	52.5	2.50	19.00	1.20	1.54	2.20	3.87
—	—	0.9	0.9	1.0	1.0	1.0	1.0	1.0	1.0	1.1	1.1	1.1	1.1	1.1						
—	—	—	—	—	—	16.8	19.9	22.8	25.6	32.0	35.2	38.9	42.5	46.6	3.15	25.00	1.79	2.31	3.31	5.89
—	—	—	—	—	—	1.0	1.0	1.0	1.0	1.0	1.1	1.1	1.1	1.1						
—	—	14.3	16.7	18.9	21.6	24.3	26.9	29.6	32.2	38.3	41.4	45.0	48.5	52.6	2.35	19.00	1.06	1.36	1.94	3.39
—	—	0.9	0.9	1.0	1.0	1.0	1.0	1.0	1.0	1.1	1.1	1.1	1.1	1.1						
—	—	—	—	—	—	—	—	—	—	21.4	25.2	29.3	33.2	37.6	4.12	33.50	2.64	3.43	4.93	8.75
—	—	—	—	—	—	—	—	—	—	1.0	1.0	1.0	1.1	1.1						
—	—	14.4	16.7	19.0	21.7	24.4	27.0	29.7	32.3	38.4	41.5	45.1	48.6	52.7	2.20	19.00	0.93	1.19	1.68	2.91
—	—	0.9	0.9	1.0	1.0	1.0	1.0	1.0	1.0	1.1	1.1	1.1	1.1	1.1						
—	—	—	—	—	—	—	—	—	—	21.7	25.4	29.6	33.5	37.9	3.65	33.50	2.23	2.89	4.15	7.39
—	—	—	—	—	—	—	—	—	—	1.0	1.0	1.0	1.1	1.1						
—	—	—	—	—	—	17.2	20.3	23.2	26.0	32.5	35.6	39.3	42.9	47.1	2.50	25.00	1.20	1.54	2.20	3.87
—	—	—	—	—	—	1.0	1.0	1.0	1.0	1.0	1.0	1.1	1.1	1.1						
—	—	—	—	—	—	—	—	—	—	22.0	25.7	29.9	33.8	38.2	3.15.	33.50	1.79	2.31	3.31	5.89
—	—	—	—	—	—	—	—	—	—	1.0	1.0	1.0	1.1	1.1						
—	—	—	—	—	—	17.3	20.4	23.3	26.1	32.5	35.7	39.4	43.0	47.2	2.35	25.00	1.06	1.36	1.94	3.39
—	—	—	—	—	—	1.0	1.0	1.0	1.0	1.0	1.0	1.1	1.1	1.1						
—	—	—	—	—	—	17.4	20.5	23.4	26.2	32.6	35.8	39.5	43.1	47.3	2.20	25.00	0.93	1.19	1.68	2.91
—	—	—	—	—	—	1.0	1.0	1.0	1.0	1.0	1.0	1.1	1.1	1.1						
—	—	—	—	—	—	—	—	—	—	22.4	26.1	30.3	34.2	38.6	2.50	33.50	1.20	1.54	2.20	3.87
—	—	—	—	—	—	—	—	—	—	1.0	1.0	1.0	1.1	1.1						
—	—	—	—	—	—	—	—	—	—	22.4	26.2	30.3	34.3	38.7	2.35	33.50	1.06	1.36	1.94	3.39
—	—	—	—	—	—	—	—	—	—	1.0	1.0	1.0	1.1	1.1						
—	—	—	—	—	—	—	—	—	—	22.5	26.3	30.4	34.4	38.8	2.20	33.50	0.93	1.19	1.68	2.91
—	—	—	—	—	—	—	—	—	—	1.0	1.0	1.0	1.1	1.1						

Arc Length Correction Factors are located beneath Center Distance Values.

⚠WARNING! **Sheave Rim Speed in excess of 6500 feet per minute — see pg. 236

POWER-WEDGE PRE-ENGINEERED DRIVE SELECTION TABLES

5V/5VX PRE-ENGINEERED TABLES RATIO 1.00 - 1.05

Driven Speed for Motor Speed of				Sheave Outside Diameters		V-Belt Number and Center Distance (other sizes may be available, see page 214)																					
690 RPM	870 RPM	1160 RPM	1750 RPM	Small Sheave	Large Sheave	Speed Ratio	5VX 500	5VX 530	5VX 560	5VX 600	5VX 630	5VX 670	5VX 710	5VX 750	5VX 800	5VX 850	5VX 900	5VX 950	5VX 1000	5VX 1060	5VX 1120	5VX 1180	5VX 1250	5VX 1320	5VX 1400	5VX 1500
690	870	1160	1750	4.40	4.40	1.00	18.1	19.6	21.1	23.1	24.6	26.6	28.6	30.6	33.1	35.6	38.1	40.6	43.1	46.1	49.1	52.1	55.6	59.1	63.1	68.1
				*	*		0.9	0.9	0.9	0.9	0.9	0.9	0.9	0.9	0.9	0.9	0.9	1.0	1.0	1.0	1.0	1.0	1.0	1.0	1.0	1.0
690	870	1160	1750	4.65	4.65	1.00	17.7	19.2	20.7	22.7	24.2	26.2	28.2	30.2	32.7	35.2	37.7	40.2	42.7	45.7	48.7	51.7	55.2	58.7	62.7	67.7
				*	*		0.9	0.9	0.9	0.9	0.9	0.9	0.9	0.9	0.9	0.9	0.9	1.0	1.0	1.0	1.0	1.0	1.0	1.0	1.0	1.0
690	870	1160	1750	4.90	4.90	1.00	17.3	18.8	20.3	22.3	23.8	25.8	27.8	29.8	32.3	34.8	37.3	39.8	42.3	45.3	48.3	51.3	54.8	58.3	62.3	67.3
				*	*		0.9	0.9	0.9	0.9	0.9	0.9	0.9	0.9	0.9	0.9	0.9	1.0	1.0	1.0	1.0	1.0	1.0	1.0	1.0	1.0
690	870	1160	1750	5.20	5.20	1.00	16.8	18.3	19.8	21.8	23.3	25.3	27.3	29.3	31.8	34.3	36.8	39.3	41.8	44.8	47.8	50.8	54.3	57.8	61.8	66.8
				*	*		0.9	0.9	0.9	0.9	0.9	0.9	0.9	0.9	0.9	0.9	0.9	1.0	1.0	1.0	1.0	1.0	1.0	1.0	1.0	1.0
690	870	1160	1750	5.50	5.50	1.00	16.4	17.9	19.4	21.4	22.9	24.9	26.9	28.9	31.4	33.9	36.4	38.9	41.4	44.4	47.4	50.4	53.9	57.4	61.4	66.4
				*	*		0.9	0.9	0.9	0.9	0.9	0.9	0.9	0.9	0.9	0.9	0.9	1.0	1.0	1.0	1.0	1.0	1.0	1.0	1.0	1.0
690	870	1160	1750	5.90	5.90	1.00	15.7	17.2	18.7	20.7	22.2	24.2	26.2	28.2	30.7	33.2	35.7	38.2	40.7	43.7	46.7	49.7	53.2	56.7	60.7	65.7
				*	*		0.9	0.9	0.9	0.9	0.9	0.9	0.9	0.9	0.9	0.9	0.9	1.0	1.0	1.0	1.0	1.0	1.0	1.0	1.0	1.0
690	870	1160	1750	6.30	6.30	1.00	15.1	16.6	18.1	20.1	21.6	23.6	25.6	27.6	30.1	32.6	35.1	37.6	40.1	43.1	46.1	49.1	52.6	56.1	60.1	65.1
				*	*		0.9	0.9	0.9	0.9	0.9	0.9	0.9	0.9	0.9	0.9	0.9	1.0	1.0	1.0	1.0	1.0	1.0	1.0	1.0	1.0
690	870	1160	1750	6.70	6.70	1.00	14.5	16.0	17.5	19.5	21.0	23.0	25.0	27.0	29.5	32.0	34.5	37.0	39.5	42.5	45.5	48.5	52.0	55.5	59.5	64.5
				*	*		0.9	0.9	0.9	0.9	0.9	0.9	0.9	0.9	0.9	0.9	0.9	1.0	1.0	1.0	1.0	1.0	1.0	1.0	1.0	1.0
690	870	1160	1750	7.10	7.10	1.00	13.8	15.3	16.8	18.8	20.3	22.3	24.3	26.3	28.8	31.3	33.8	36.3	38.8	41.8	44.8	47.8	51.3	54.8	58.8	63.8
							0.9	0.9	0.9	0.9	0.9	0.9	0.9	0.9	0.9	0.9	0.9	1.0	1.0	1.0	1.0	1.0	1.0	1.0	1.0	1.0
690	870	1160	1750	7.50	7.50	1.00	13.2	14.7	16.2	18.2	19.7	21.7	23.7	25.7	28.2	30.7	33.2	35.7	38.2	41.2	44.2	47.2	50.7	54.2	58.2	63.2
							0.9	0.9	0.9	0.9	0.9	0.9	0.9	0.9	0.9	0.9	0.9	1.0	1.0	1.0	1.0	1.0	1.0	1.0	1.0	1.0
690	870	1160	1750	8.00	8.00	1.00	12.4	13.9	15.4	17.4	18.9	20.9	22.9	24.9	27.4	29.9	32.4	34.9	37.4	40.4	43.4	46.4	49.9	53.4	57.4	62.4
							0.9	0.9	0.9	0.9	0.9	0.9	0.9	0.9	0.9	0.9	0.9	1.0	1.0	1.0	1.0	1.0	1.0	1.0	1.0	1.0
690	870	1160	1750	8.50	8.50	1.00	11.6	13.1	14.6	16.6	18.1	20.1	22.1	24.1	26.6	29.1	31.6	34.1	36.6	39.6	42.6	45.6	49.1	52.6	56.6	61.6
							0.9	0.9	0.9	0.9	0.9	0.9	0.9	0.9	0.9	0.9	0.9	1.0	1.0	1.0	1.0	1.0	1.0	1.0	1.0	1.0
690	870	1160	1750	9.00	9.00	1.00	10.9	12.4	13.9	15.9	17.4	19.4	21.4	23.4	25.9	28.4	30.9	33.4	35.9	38.9	41.9	44.9	48.4	51.9	55.9	60.9
							0.9	0.9	0.9	0.9	0.9	0.9	0.9	0.9	0.9	0.9	0.9	1.0	1.0	1.0	1.0	1.0	1.0	1.0	1.0	1.0
690	870	1160	1750	9.25	9.25	1.00	—	12.0	13.5	15.5	17.0	19.0	21.0	23.0	25.5	28.0	30.5	33.0	35.5	38.5	41.5	44.5	48.0	51.5	55.5	60.5
							—	0.9	0.9	0.9	0.9	0.9	0.9	0.9	0.9	0.9	0.9	1.0	1.0	1.0	1.0	1.0	1.0	1.0	1.0	1.0
690	870	1160	1750	9.75	9.75	1.00	—	—	12.7	14.7	16.2	18.2	20.2	22.2	24.7	27.2	29.7	32.2	34.7	37.7	40.7	43.7	47.2	50.7	54.7	59.7
							—	—	0.9	0.9	0.9	0.9	0.9	0.9	0.9	0.9	0.9	1.0	1.0	1.0	1.0	1.0	1.0	1.0	1.0	1.0
690	870	1160	1750	10.30	10.30	1.00	—	—	11.8	13.8	15.3	17.3	19.3	21.3	23.8	26.3	28.8	31.3	33.8	36.8	39.8	42.8	46.3	49.8	53.8	58.8
							—	—	0.9	0.9	0.9	0.9	0.9	0.9	0.9	0.9	0.9	1.0	1.0	1.0	1.0	1.0	1.0	1.0	1.0	1.0
690	870	1160	1750	10.90	10.90	1.00	—	—	—	12.9	14.4	16.4	18.4	20.4	22.9	25.4	27.9	30.4	32.9	35.9	38.9	41.9	45.4	48.9	52.9	57.9
							—	—	—	0.9	0.9	0.9	0.9	0.9	0.9	0.9	0.9	1.0	1.0	1.0	1.0	1.0	1.0	1.0	1.0	1.0
690	870	1160	1750	11.30	11.30	1.00	—	—	—	—	13.8	15.8	17.8	19.8	22.3	24.8	27.3	29.8	32.3	35.3	38.3	41.3	44.8	48.3	52.3	57.3
							—	—	—	—	0.9	0.9	0.9	0.9	0.9	0.9	0.9	1.0	1.0	1.0	1.0	1.0	1.0	1.0	1.0	1.0
690	870	1160	1750	11.80	11.80	1.00	—	—	—	—	—	15.0	17.0	19.0	21.5	24.0	26.5	29.0	31.5	34.5	37.5	40.5	44.0	47.5	51.5	56.5
							—	—	—	—	—	0.9	0.9	0.9	0.9	0.9	0.9	1.0	1.0	1.0	1.0	1.0	1.0	1.0	1.0	1.0
690	870	1160	1750	12.50	12.50	1.00	—	—	—	—	—	—	15.9	17.9	20.4	22.9	25.4	27.9	30.4	33.4	36.4	39.4	42.9	46.4	50.4	55.4
							—	—	—	—	—	—	0.9	0.9	0.9	0.9	0.9	1.0	1.0	1.0	1.0	1.0	1.0	1.0	1.0	1.0
690	870	1160	1750	13.20	13.20	1.00	—	—	—	—	—	—	14.8	16.8	19.3	21.8	24.3	26.8	29.3	32.3	35.3	38.3	41.8	45.3	49.3	54.3
							—	—	—	—	—	—	0.9	0.9	0.9	0.9	0.9	1.0	1.0	1.0	1.0	1.0	1.0	1.0	1.0	1.0
690	870	1160	1750	15.00	15.00	1.00	—	—	—	—	—	—	—	—	—	18.9	21.4	23.9	26.4	29.4	32.4	35.4	38.9	42.4	46.4	51.4
							—	—	—	—	—	—	—	—	—	0.9	0.9	1.0	1.0	1.0	1.0	1.0	1.0	1.0	1.0	1.0
671	846	1128	1702	9.00	9.25	1.03	10.7	12.2	13.7	15.7	17.2	19.2	21.2	23.2	25.7	28.2	30.7	33.2	35.7	38.7	41.7	44.7	48.2	51.7	55.7	60.7
							0.8	0.9	0.9	0.9	0.9	0.9	0.9	0.9	0.9	0.9	0.9	1.0	1.0	1.0	1.0	1.0	1.0	1.0	1.0	1.0
665	839	1119	1688	10.90	11.30	1.04	—	—	—	—	14.1	16.1	18.1	20.1	22.6	25.1	27.6	30.1	32.6	35.6	38.6	41.6	45.1	48.6	52.6	57.6
							—	—	—	—	0.9	0.9	0.9	0.9	0.9	0.9	0.9	1.0	1.0	1.0	1.0	1.0	1.0	1.0	1.0	1.0
661	833	1110	1675	11.30	11.80	1.04	—	—	—	—	13.4	15.4	17.4	19.4	21.9	24.4	26.9	29.4	31.9	34.9	37.9	40.9	44.4	47.9	51.9	56.9
							—	—	—	—	0.9	0.9	0.9	0.9	0.9	0.9	0.9	1.0	1.0	1.0	1.0	1.0	1.0	1.0	1.0	1.0
654	825	1100	1659	9.25	9.75	1.05	—	11.6	13.1	15.1	16.6	18.6	20.6	22.6	25.1	27.6	30.1	32.6	35.1	38.1	41.1	44.1	47.6	51.1	55.1	60.1
							—	0.9	0.9	0.9	0.9	0.9	0.9	0.9	0.9	0.9	0.9	1.0	1.0	1.0	1.0	1.0	1.0	1.0	1.0	1.0
654	825	1100	1659	4.65	4.90	1.05	17.5	19.0	20.5	22.5	24.0	26.0	28.0	30.0	32.5	35.0	37.5	40.0	42.5	45.5	48.5	51.5	55.0	58.5	62.5	67.5
				*	*		0.8	0.9	0.9	0.9	0.9	0.9	0.9	0.9	0.9	0.9	0.9	1.0	1.0	1.0	1.0	1.0	1.0	1.0	1.0	1.0

* = Diameters below RMA minimum for other than Cog-Belt V-belts. Use with Super Power-Wedge V-belts will result in reduced life and loss of efficiency.

⚠**WARNING**** = Sheave Rim Speed in excess of 6500 feet per minute - see Page 236

Arc-Length Correction Factors are located beneath Center Distance Values

POWER-WEDGE PRE-ENGINEERED DRIVE SELECTION TABLES

5V/5VX PRE-ENGINEERED TABLES — RATIO 1.00 - 1.05

V-Belt Number and Center Distance (Other sizes may be available, see page 214)																		Rated HP per Belt (Includes Added HP for Speed Ratio) Power-Wedge Cog-Belt (5VX) RPM of Small Sheave				Rated HP per Belt (Includes Added HP for Speed Ratio) Super Power-Wedge Belt (5V) RPM of Small Sheave			
5VX 1600	5VX 1700	5VX 1800	5VX 1900	5VX 2000	5V 2120	5V 2240	5V 2360	5V 2500	5V 2650	5V 2800	5V 3000	5V 3150	5V 3350	5V 3550	Small Sheave	Large Sheave	Speed Ratio	690 RPM	870 RPM	1160 RPM	1750 RPM	690 RPM	870 RPM	1160 RPM	1170 RPM
73.1	78.1	83.1	88.1	93.1	—	—	—	—	—	—	—	—	—	—	4.40	4.40	1.00	3.82	4.64	5.90	8.23	*	*	*	*
1.0	1.0	1.1	1.1	1.1	—	—	—	—	—	—	—	—	—	—	*	*									
72.7	77.7	82.7	87.7	92.7	—	—	—	—	—	—	—	—	—	—	4.65	4.65	1.00	4.32	5.26	6.71	9.40	*	*	*	*
1.0	1.0	1.1	1.1	1.1	—	—	—	—	—	—	—	—	—	—	*	*									
72.3	77.3	82.3	87.3	92.3	—	—	—	—	—	—	—	—	—	—	4.90	4.90	1.00	4.81	5.88	7.51	10.55	*	*	*	*
1.0	1.0	1.1	1.1	1.1	—	—	—	—	—	—	—	—	—	—	*	*									
71.8	76.8	81.8	86.8	91.8	—	—	—	—	—	—	—	—	—	—	5.20	5.20	1.00	5.41	6.61	8.46	11.93	*	*	*	*
1.0	1.0	1.1	1.1	1.1	—	—	—	—	—	—	—	—	—	—	*	*									
71.4	76.4	81.4	86.4	91.4	—	—	—	—	—	—	—	—	—	—	5.50	5.50	1.00	6.00	7.35	9.42	13.30	*	*	*	*
1.0	1.0	1.1	1.1	1.1	—	—	—	—	—	—	—	—	—	—	*	*									
70.7	75.7	80.7	85.7	90.7	—	—	—	—	—	—	—	—	—	—	5.90	5.90	1.00	6.78	8.32	10.68	15.11	*	*	*	*
1.0	1.0	1.1	1.1	1.1	—	—	—	—	—	—	—	—	—	—	*	*									
70.1	75.1	80.1	85.1	90.1	—	—	—	—	—	—	—	—	—	—	6.30	6.30	1.00	7.57	9.28	11.93	16.89	*	*	*	*
1.0	1.0	1.1	1.1	1.1	—	—	—	—	—	—	—	—	—	—	*	*									
69.5	74.5	79.5	84.5	89.5	—	—	—	—	—	—	—	—	—	—	6.70	6.70	1.00	8.34	10.24	13.17	18.66	*	*	*	*
1.0	1.0	1.1	1.1	1.1	—	—	—	—	—	—	—	—	—	—	*	*									
68.8	73.8	78.8	83.8	88.8	94.8	100.8	106.8	113.8	121.3	128.8	138.8	146.3	156.3	166.3	7.10	7.10	1.00	9.12	11.20	14.40	20.41	7.42	9.02	11.42	15.60
1.0	1.0	1.1	1.1	1.1	1.1	1.1	1.1	1.1	1.1	1.1	1.1	1.1	1.2	1.2											
68.2	73.2	78.2	83.2	88.2	94.2	100.2	106.2	113.2	120.7	128.2	138.2	145.7	155.7	165.7	7.50	7.50	1.00	9.88	12.15	15.63	22.13	8.18	9.95	12.60	17.22
1.0	1.0	1.1	1.1	1.1	1.1	1.1	1.1	1.1	1.1	1.1	1.1	1.1	1.2	1.2											
67.4	72.4	77.4	82.4	87.4	93.4	99.4	105.4	112.4	119.9	127.4	137.4	144.9	154.9	164.9	8.00	8.00	1.00	10.84	13.33	17.15	24.26	9.12	11.10	14.07	19.21
1.0	1.0	1.1	1.1	1.1	1.1	1.1	1.1	1.1	1.1	1.1	1.1	1.1	1.2	1.2											
66.6	71.6	76.6	81.6	86.6	92.6	98.2	104.6	111.6	119.1	126.6	136.6	144.1	154.1	164.1	8.50	8.50	1.00	11.79	14.50	18.65	26.35	10.05	12.25	15.52	21.15
1.0	1.0	1.1	1.1	1.1	1.1	1.1	1.1	1.1	1.1	1.1	1.1	1.1	1.2	1.2											
65.9	70.9	75.9	80.9	85.9	91.9	97.9	103.9	110.9	118.4	125.9	135.9	143.4	153.4	163.4	9.00	9.00	1.00	12.74	15.66	20.14	28.41	10.98	13.38	16.95	23.04
1.0	1.0	1.1	1.1	1.1	1.1	1.1	1.1	1.1	1.1	1.1	1.1	1.1	1.2	1.2											
65.5	70.5	75.5	80.5	85.5	91.5	97.5	103.5	110.5	118.0	125.5	135.5	143.0	153.0	163.0	9.25	9.25	1.00	13.21	16.24	20.89	29.43	11.44	13.94	17.66	23.96
1.0	1.0	1.1	1.1	1.1	1.1	1.1	1.1	1.1	1.1	1.1	1.1	1.1	1.2	1.2											
64.7	69.7	74.7	79.7	84.7	90.7	96.7	102.7	109.7	117.2	124.7	134.7	142.2	152.2	162.2	9.75	9.75	1.00	14.15	17.39	22.36	31.44	12.36	15.06	19.07	25.77
1.0	1.0	1.1	1.1	1.1	1.1	1.1	1.1	1.1	1.1	1.1	1.1	1.1	1.2	1.2											
63.8	68.8	73.8	78.8	83.8	89.8	95.8	101.8	108.8	116.3	123.8	133.8	141.3	151.3	161.3	10.30	10.30	1.00	15.17	18.65	23.96	33.60	13.36	16.28	20.59	27.70
1.0	1.0	1.1	1.1	1.1	1.1	1.1	1.1	1.1	1.1	1.1	1.1	1.1	1.2	1.2											
62.9	67.9	72.9	77.9	82.9	88.9	94.9	100.9	107.9	115.4	122.9	132.9	140.4	150.4	160.4	10.90	10.90	1.00	16.28	20.01	25.69	35.91	14.44	17.59	22.22	29.73
1.0	1.0	1.1	1.1	1.1	1.1	1.1	1.1	1.1	1.1	1.1	1.1	1.1	1.2	1.2											
62.3	67.3	72.3	77.3	82.3	88.3	94.3	100.3	107.3	114.8	122.3	132.3	139.8	149.8	159.8	11.30	11.30	1.00	17.02	20.91	26.83	37.42	15.16	18.46	23.29	31.03
1.0	1.0	1.1	1.1	1.1	1.1	1.1	1.1	1.1	1.1	1.1	1.1	1.1	1.2	1.2											
61.5	66.5	71.5	76.5	81.5	87.5	93.5	99.5	106.5	114.0	121.5	131.5	139.0	149.0	159.0	11.80	11.80	1.00	17.94	22.03	28.24	39.26	16.05	19.53	24.61	32.60
1.0	1.0	1.1	1.1	1.1	1.1	1.1	1.1	1.1	1.1	1.1	1.1	1.1	1.2	1.2											
60.4	65.4	70.4	75.4	80.4	86.4	92.4	98.4	105.4	112.9	120.4	130.4	137.9	147.9	157.9	12.50	12.50	1.00	19.21	23.58	30.19	41.78	17.29	21.02	26.43	34.70
1.0	1.0	1.1	1.1	1.1	1.1	1.1	1.1	1.1	1.1	1.1	1.1	1.1	1.2	1.2											
59.3	64.3	69.3	74.3	79.3	85.3	91.3	97.3	104.3	111.8	119.3	129.3	136.8	146.8	156.8	13.20	13.20	1.00	20.48	25.12	32.12	44.22	18.52	22.49	28.20	36.67
1.0	1.0	1.1	1.1	1.1	1.1	1.1	1.1	1.1	1.1	1.1	1.1	1.1	1.2	1.2											
56.4	61.4	66.4	71.4	76.4	82.4	88.4	94.4	101.4	108.9	116.4	126.4	133.9	143.9	153.9	15.00	15.00	1.00	23.69	29.01	36.92	**	21.61	26.16	32.55	**
1.0	1.0	1.1	1.1	1.1	1.1	1.1	1.1	1.1	1.1	1.1	1.1	1.1	1.2	1.2											
65.7	70.7	75.7	80.7	85.7	91.7	97.7	103.7	110.7	118.2	125.7	135.7	143.2	153.2	163.2	9.00	9.25	1.03	12.79	15.73	20.24	28.55	11.04	13.46	17.07	23.21
1.0	1.0	1.1	1.1	1.1	1.1	1.1	1.1	1.1	1.1	1.1	1.1	1.1	1.2	1.2											
62.6	67.6	72.6	77.6	82.6	88.6	94.6	100.6	107.6	115.1	122.6	132.6	140.1	150.1	160.1	10.90	11.30	1.04	16.39	20.15	25.87	36.19	14.51	17.67	22.33	29.90
1.0	1.0	1.1	1.1	1.1	1.1	1.1	1.1	1.1	1.1	1.1	1.1	1.1	1.2	1.2											
61.9	66.9	71.9	76.9	81.9	87.9	93.9	99.9	106.9	114.4	121.9	131.9	139.4	149.4	159.4	11.30	11.80	1.04	17.13	21.05	27.01	37.70	15.23	18.54	23.40	31.20
1.0	1.0	1.1	1.1	1.1	1.1	1.1	1.1	1.1	1.1	1.1	1.1	1.1	1.2	1.2											
65.1	70.1	75.1	80.1	85.1	91.1	97.1	103.1	110.1	117.6	125.1	135.1	142.6	152.6	162.6	9.25	9.75	1.05	13.32	16.38	21.07	29.71	11.51	14.02	17.78	24.13
1.0	1.0	1.1	1.1	1.1	1.1	1.1	1.1	1.1	1.1	1.1	1.1	1.1	1.2	1.2											
72.5	77.5	82.5	87.5	92.5	-0.0	-0.0	-0.0	-0.0	-0.0	-0.0	-0.0	-0.0	-0.0	-0.0	4.65	4.90	1.05	4.43	5.40	6.89	9.68	*	*	*	*
1.0	1.0	1.1	1.1	1.1											*	*									

* = Diameters below RMA minimum for other than Cog-Belt V-belts. Use with Super Power-Wedge V-belts will result in reduced life and loss of efficiency.

⚠**WARNING**** = Sheave Rim Speed in excess of 6500 feet per minute - see Page 236

Arc-Length Correction Factors are located beneath Center Distance Values

POWER-WEDGE PRE-ENGINEERED DRIVE SELECTION TABLES

5V/5VX PRE-ENGINEERED TABLES RATIO 1.06 - 1.12

Driven Speed for Motor Speed of				Sheave Outside Diameters		V-Belt Number and Center Distance (other sizes may be available, see page214)																					
690 RPM	870 RPM	1160 RPM	1750 RPM	Small Sheave	Large Sheave	Speed Ratio	5VX 500	5VX 530	5VX 560	5VX 600	5VX 630	5VX 670	5VX 710	5VX 750	5VX 800	5VX 850	5VX 900	5VX 950	5VX 1000	5VX 1060	5VX 1120	5VX 1180	5VX 1250	5VX 1320	5VX 1400	5VX 1500
653	824	1098	1656	12.50	13.20	1.06	—	—	—	—	—	—	15.3	17.3	19.8	22.3	24.8	27.3	29.8	32.8	35.8	38.8	42.3	45.8	49.8	54.8
							—	—	—	—	—	—	0.9	0.9	0.9	0.9	0.9	1.0	1.0	1.0	1.0	1.0	1.0	1.0	1.0	1.0
653	823	1097	1656	9.75	10.30	1.06	—	—	12.2	14.3	15.8	17.8	19.8	21.8	24.3	26.8	29.3	31.8	34.3	37.3	40.3	43.3	46.8	50.3	54.3	59.3
							—	—	0.9	0.9	0.9	0.9	0.9	0.9	0.9	0.9	0.9	1.0	1.0	1.0	1.0	1.0	1.0	1.0	1.0	1.0
653	823	1097	1655	7.10	7.50	1.06	13.5	15.0	16.5	18.5	20.0	22.0	24.0	26.0	28.5	31.0	33.5	36.0	38.5	41.5	44.5	47.5	51.0	54.5	58.5	63.5
							0.8	0.9	0.9	0.9	0.9	0.9	0.9	0.9	0.9	0.9	0.9	1.0	1.0	1.0	1.0	1.0	1.0	1.0	1.0	1.0
652	822	1096	1654	4.40	4.85	1.06	17.9	19.4	20.9	22.9	24.4	26.4	28.4	30.4	32.9	35.4	37.9	40.4	42.9	45.9	48.9	51.9	55.4	58.9	62.9	67.9
				*	*		0.8	0.9	0.9	0.9	0.9	0.9	0.9	0.9	0.9	0.9	0.9	1.0	1.0	1.0	1.0	1.0	10.	10.	10.	10.
652	822	1096	1653	5.20	5.50	1.06	16.6	18.1	19.6	21.6	23.1	25.1	27.1	29.1	31.6	24.3	36.6	39.1	412.6	44.6	47.6	50.6	54.1	57.6	61.6	66.6
				*	*		0.8	0.9	0.9	0.9	0.9	0.9	0.9	0.9	0.9	0.9	0.9	1.0	1.0	1.0	1.0	1.0	1.0	1.0	1.0	1.0
652	822	1096	1653	10.30	10.90	1.06	—	—	—	13.3	14.8	16.8	18.8	20.8	23.3	25.8	28.3	30.8	33.3	36.3	39.3	42.3	45.8	49.3	53.3	58.3
							—	—	—	0.9	0.9	0.9	0.9	0.9	0.9	0.9	0.9	1.0	1.0	1.0	1.0	1.0	1.0	1.0	1.0	1.0
651	821	1095	1652	8.50	9.00	1.06	11.3	128.	14.3	16.3	17.8	19.8	21.8	23.8	26.3	28.8	31.3	33.8	36.3	39.3	42.3	45.3	48.8	52.3	56.3	61.3
							0.8	0.9	0.9	0.9	0.9	0.9	0.9	0.9	0.9	0.9	0.9	1.0	1.0	1.0	1.0	1.0	1.0	1.0	1.0	1.0
651	821	1095	1651	11.80	12.50	1.06	—	—	—	—	—	14.4	16.4	18.4	20.9	23.4	25.9	28.4	30.9	33.9	36.9	39.9	43.4	46.9	50.9	55.9
							—	—	—	—	—	0.9	0.9	0.9	0.9	0.9	0.9	1.0	1.0	1.0	1.0	1.0	1.0	1.0	1.0	1.0
651	820	1094	1650	6.70	7.10	1.06	14.2	15.7	17.2	19.2	20.7	22.7	24.7	26.7	29.2	31.7	34.2	36.7	39.2	42.2	45.2	48.2	51.7	55.2	59.2	64.2
				*	*		0.8	0.9	0.9	0.9	0.9	0.9	0.9	0.9	0.9	0.9	0.9	1.0	1.0	1.0	1.0	1.0	1.0	1.0	1.0	1.0
650	820	1093	1649	13.20	14.00	1.06	—	—	—	—	—	—	—	16.1	18.6	21.2	23.6	26.1	28.6	31.6	34.6	37.6	41.1	44.6	48.6	53.6
							—	—	—	—	—	—	—	0.9	0.9	0.9	0.9	1.0	1.0	1.0	1.0	1.0	1.0	1.0	1.0	1.0
649	819	1092	1647	4.90	5.20	1.06	17.1	18.6	20.1	22.1	23.6	25.6	27.6	29.6	32.1	34.6	37.1	39.6	42.1	45.1	48.1	51.1	54.6	58.1	62.1	67.1
				*	*		0.8	0.9	0.9	0.9	0.9	0.9	0.9	0.9	0.9	0.9	0.9	1.0	1.0	1.0	1.0	1.0	1.0	1.0	1.0	1.0
649	818	1091	1646	8.00	8.50	1.06	12.0	13.5	15.0	17.0	18.5	20.5	22.5	24.5	27.0	29.5	32.0	34.5	37.0	40.0	43.0	46.0	49.5	53.0	57.0	62.0
							0.8	0.9	0.9	0.9	0.9	09.	0.9	0.9	0.9	0.9	0.9	1.0	1.0	1.0	1.0	1.0	1.0	1.0	1.0	1.0
648	817	1090	1644	6.30	6.70	1.06	14.8	16.3	17.8	19.8	21.3	23.3	25.3	27.3	29.8	32.3	34.8	37.3	39.8	42.8	45.8	48.8	52.3	55.8	59.8	64.8
				*	*		0.8	0.9	0.9	0.9	0.9	0.9	0.9	0.9	0.9	0.9	0.9	1.0	1.0	1.0	1.0	1.0	1.0	1.0	1.0	1.0
647	815	1087	1639	7.50	8.00	1.07	—	—	—	—	—	—	—	—	—	18.1	20.6	23.1	25.6	28.6	31.6	34.6	38.1	41.6	45.6	50.7
							—	—	—	—	—	—	—	—	—	0.9	0.9	1.0	1.0	1.0	1.0	1.0	1.0	1.0	1.0	1.0
646	815	1087	1639	7.50	8.00	1.07	12.8	14.3	15.8	17.8	19.3	21.3	23.3	25.3	27.8	30.3	32.8	35.3	37.8	40.8	43.8	46.8	503	53.8	57.8	62.8
							0.8	0.9	0.9	0.9	09.	09.	0.9	0.9	0.9	0.9	0.9	1.0	1.0	1.0	1.0	1.0	1.0	1.0	1.0	1.0
645	814	1085	1637	5.90	6.30	1.07	15.4	16.9	18.4	20.4	21.9	23.9	25.9	27.9	30.4	32.9	35.4	37.9	40.4	43.4	46.4	49.4	52.9	56.4	60.4	65.4
				*	*		0.8	0.9	0.9	0.9	0.9	0.9	0.9	0.9	0.9	0.9	0.9	1.0	1.0	1.0	1.0	1.0	1.0	1.0	1.0	1.0
644	812	1082	1633	14.00	15.00	1.07	—	—	—	—	—	—	—	—	17.2	19.7	22.2	24.7	27.2	30.2	33.2	36.2	39.7	43.2	47.2	52.2
							—	—	—	—	—	—	—	—	0.9	0.9	0.9	1.0	1.0	1.0	1.0	1.0	1.0	1.0	1.0	1.0
642	810	1080	1629	5.50	5.90	1.07	16.0	17.5	19.0	21.0	22.5	24.5	26.5	28.5	31.0	33.5	36.0	38.5	41.0	414.0	47.0	50.0	53.5	57.0	61.0	66.0
				*	*		0.8	0.9	0.9	0.9	0.9	0.9	0.9	0.9	0.9	0.9	0.9	1.0	1.0	1.0	1.0	1.0	1.0	1.0	1.0	1.0
637	803	1071	1615	10.90	11.80	1.08	—	—	—	—	13.7	15.7	17.7	19.7	22.2	24.7	27.2	29.7	32.2	35.2	38.2	41.2	44.7	48.2	52.2	57.2
							—	—	—	—	0.9	0.9	0.9	0.9	0.9	0.9	0.9	1.0	1.0	1.0	1.0	1.0	1.0	1.0	1.0	1.0
636	802	1070	1614	9.00	9.75	1.08	—	11.8	13.3	15.3	16.8	18.8	20.8	22.8	25.3	27.8	30.3	32.8	35.3	38.3	41.3	44.3	47.8	51.3	55.3	60.3
							—	0.9	0.9	0.9	0.9	0.9	0.9	0.9	0.9	0.9	0.9	1.0	1.0	1.0	1.0	1.0	1.0	1.0	1.0	1.0
633	799	1065	1607	8.50	9.25	1.09	11.1	12.6	14.1	16.1	17.6	19.6	21.6	23.6	26.1	28.6	31.1	33.6	36.1	39.1	42.1	45.1	48.6	52.1	56.1	61.1
							0.8	0.9	0.9	0.9	0.9	0.9	0.9	0.9	0.9	0.9	0.9	1.0	1.0	1.0	1.0	1.0	1.0	1.0	1.0	1.0
628	792	1056	1594	10.30	11.30	1.10	—	—	—	13.0	14.5	16.5	18.5	20.5	23.0	25.5	28.0	30.5	33.0	36.0	39.0	42.0	45.5	49.0	53.0	58.0
							—	—	—	0.9	0.9	0.9	0.9	0.9	0.9	0.9	0.9	1.0	1.0	1.0	1.0	1.0	1.0	1.0	1.0	1.0
623	786	1048	1581	11.30	12.50	1.11	—	—	—	—	—	14.8	16.8	18.8	21.3	23.8	26.3	28.8	31.3	34.3	37.3	40.3	43.8	47.3	51.3	56.3
							—	—	—	—	—	.09	.09	.09	.09	.09	.09	1.0	1.0	1.0	1.0	1.0	1.0	1.0	1.0	1.0
619	780	1041	1570	9.25	10.30	1.11	—	—	12.6	14.6	16.1	18.1	20.1	22.1	24.6	27.1	29.6	32.1	34.6	37.6	40.6	43.6	47.1	50.6	54.6	59.6
							—	—	0.9	0.9	0.9	0.9	0.9	0.9	0.9	0.9	0.9	1.0	1.0	1.0	1.0	1.0	1.0	1.0	1.0	1.0
618	779	1039	1568	4.40	4.90	1.12	17.7	19.2	20.7	22.7	24.2	26.2	28.2	30.2	32.7	35.2	37.7	40.2	42.7	45.7	48.7	51.7	55.2	58.7	62.7	67.7
				*	*		.08	0.9	0.9	0.9	0.9	0.9	0.9	0.9	0.9	0.9	0.9	1.0	1.0	1.0	1.0	1.0	1.0	1.0	1.0	1.0
617	777	1036	1564	9.75	10.90	1.12	—	—	—	13.8	15.3	17.3	19.3	21.3	23.8	26.3	28.8	31.3	33.8	36.8	39.8	42.8	46.3	49.8	53.8	58.8
							—	—	—	0.9	0.9	0.9	0.9	0.9	0.9	0.9	0.9	1.0	1.0	1.0	1.0	1.0	1.0	1.0	1.0	1.0
616	777	1036	1563	11.80	13.20	1.12	—	—	—	—	—	—	15.8	17.9	20.4	22.9	25.4	27.9	30.4	33.4	36.4	39.4	42.9	46.4	50.4	55.4
							—	—	—	—	—	—	0.9	0.9	0.9	0.9	0.9	0.9	1.0	1.0	1.0	1.0	1.0	1.0	1.0	1.0
616	776	1035	1561	4.65	5.20	1.12	17.3	18.8	20.3	22.3	23.8	25.8	27.8	29.8	32.3	34.8	37.3	39.8	42.3	45.3	48.3	51.3	54.8	58.3	62.3	67.3
				*	*		0.8	0.9	0.9	0.9	0.9	.09	0.9	0.9	0.9	0.9	0.9	1.0	1.0	1.0	1.0	1.0	1.0	1.0	1.0	1.0
616	776	1035	1561	12.50	14.00	1.12	—	—	—	—	—	—	—	16.7	19.2	21.7	24.2	26.7	29.2	32.2	35.2	38.2	41.7	45.2	49.2	54.2
							—	—	—	—	—	—	—	0.9	0.9	0.9	0.9	0.9	1.0	1.0	1.0	1.0	1.0	1.0	1.0	1.0
615	776	1035	1561	6.70	7.50	1.12	13.8	15.3	16.8	18.8	20.3	22.3	24.3	26.3	28.8	31.3	33.8	36.3	38.8	41.8	44.8	47.8	51.3	54.8	58.8	63.8
				*	*		0.8	0.9	0.9	0.9	0.9	0.9	0.9	0.9	0.9	0.9	0.9	1.0	1.0	1.0	1.0	1.0	1.0	1.0	1.0	1.0

* = Diameters below RMA minimum for other than Cog-Belt V-belts. Use with Super Power-Wedge V-belts will result in reduced life and loss of efficiency.

⚠ **WARNING** ** = Sheave Rim Speed in excess of 6500 feet per minute - see Page 236. Arc-Length Correction Factors are located beneath Center Distance Values

POWER-WEDGE PRE-ENGINEERED DRIVE SELECTION TABLES

5V/5VX PRE-ENGINEERED TABLES — RATIO 1.06 - 1.12

V-Belt Number and Center Distance (Other sizes may be available, see page 214)																		Rated HP per Belt (Includes Added HP for Speed Ratio) Power-Wedge Cog-Belt (5VX) RPM of Small Sheave				Rated HP per Belt (Includes Added HP for Speed Ratio) Super Power-Wedge Belt (5V) RPM of Small Sheave			
5VX 1600	5VX 1700	5VX 1800	5VX 1900	5VX 2000	5V 2120	5V 2240	5V 2360	5V 2500	5V 2650	5V 2800	5V 3000	5V 3150	5V 3350	5V 3550	Small Sheave	Large Sheave	Speed Ratio	690 RPM	870 RPM	1160 RPM	1750 RPM	690 RPM	870 RPM	1160 RPM	1170 RPM
59.8	64.8	69.8	74.8	79.8	85.8	91.8	97.8	104.8	112.3	119.8	129.8	137.3	147.3	157.3	12.50	13.20	1.06	19.32	23.72	30.38	42.06	17.47	21.25	26.73	35.16
1.0	1.0	1.1	1.1	1.1	1.1	1.1	1.1	1.1	1.1	1.1	1.1	1.1	1.2	1.2											
64.3	69.3	74.3	79.3	84.3	90.3	96.3	102.3	109.3	116.8	124.3	134.3	141.8	151.8	161.8	9.75	10.30	1.06	14.26	17.53	22.54	31.72	12.54	15.29	19.37	26.23
1.0	1.0	1.1	1.1	1.1	1.1	1.1	1.1	1.1	1.1	1.1	1.1	1.1	1.2	1.2											
68.5	73.5	78.5	83.5	88.5	94.5	100.5	106.5	113.5	121.0	128.5	138.5	146.0	156.0	166.0	7.10	7.50	1.06	9.23	11.34	14.59	20.69	7.60	9.25	11.72	16.06
1.0	1.0	1.1	1.1	1.1	1.1	1.1	1.1	1.1	1.1	1.1	1.1	1.1	1.2	1.2											
72.9	77.9	82.9	87.9	92.9	—	—	—	—	—	—	—	—	—	—	4.40	4.65	1.06	3.93	4.78	6.08	8.51	*	*	*	*
1.0	1.0	1.1	1.1	1.1	—	—	—	—	—	—	—	—	—	—	*	*									
71.6	76.6	81.6	86.6	91.6	—	—	—	—	—	—	—	—	—	-0.0	5.20	5.50	1.06	5.52	6.75	8.65	12.21	*	*	*	*
1.0	1.0	1.1	1.1	1.1	—	—	—	—	—	—	—	—	—	—	*	*									
63.3	68.3	73.3	78.3	83.3	89.3	95.3	101.3	108.3	115.8	123.3	133.3	140.8	150.8	160.8	10.30	10.90	1.06	15.28	18.79	24.14	33.88	13.54	16.50	20.89	28.16
1.0	1.0	1.1	1.1	1.1	1.1	1.1	1.1	1.1	1.1	1.1	1.1	1.1	1.2	1.2											
66.3	71.3	76.3	81.3	86.3	92.3	98.3	104.3	111.3	118.8	126.3	136.3	143.8	153.8	163.8	8.50	9.00	1.06	11.90	14.64	18.84	26.63	10.23	12.47	15.83	21.61
1.0	1.0	1.1	1.1	1.1	1.1	1.1	1.1	1.1	1.1	1.1	1.1	1.1	1.2	1.2	*	*									
60.9	65.9	70.9	75.9	80.9	86.9	92.9	98.9	105.9	113.4	120.9	130.9	138.4	148.4	158.4	11.80	12.50	1.06	18.05	22.17	28.43	39.54	16.23	19.76	24.92	33.06
1.0	1.0	1.1	1.1	1.1	1.1	1.1	1.1	1.1	1.1	1.1	1.1	1.1	1.2	1.2											
69.2	74.2	79.2	84.2	89.2	—	—	—	—	—	—	—	—	—	—	6.70	7.10	1.06	8.45	10.38	13.36	18.94	*	*	*	*
1.0	1.0	1.1	1.1	1.1	—	—	—	—	—	—	—	—	—	—	*	*									
58.6	63.6	68.6	73.6	78.6	84.6	90.6	96.6	103.6	111.1	118.6	128.6	136.1	146.1	156.1	13.20	14.00	1.06	20.59	25.26	32.30	44.50	18.70	22.72	28.50	37.13
1.0	1.0	1.1	1.1	1.1	1.1	1.1	1.1	1.1	1.1	1.1	1.1	1.1	1.2	1.2											
72.1	77.1	82.1	87.1	92.1	—	—	—	—	—	—	—	—	—	—	4.90	5.20	1.06	4.92	6.02	7.69	10.83	*	*	*	*
1.0	1.0	1.1	1.1	1.1	—	—	—	—	—	—	—	—	—	—	*	*									
67.0	72.0	77.0	82.0	87.0	93.0	99.0	105.0	112.0	119.5	127.0	137.0	144.5	154.5	164.5	8.00	8.50	1.06	10.95	13.46	17.33	25.54	9.30	11.33	14.38	19.67
1.0	1.0	1.1	1.1	1.1	1.1	1.1	1.1	1.1	1.1	1.1	1.1	1.1	1.2	1.2											
69.8	74.8	79.8	84.8	89.8	—	—	—	—	—	—	—	—	—	—	6.30	6.70	1.06	7.68	9.42	12.11	17.17	*	*	*	*
1.0	1.0	1.1	1.1	1.1	—	—	—	—	—	—	—	—	—	—	*	*									
55.7	60.7	65.7	70.7	75.7	81.7	87.7	93.7	100.7	108.2	115.7	125.7	133.2	143.2	153.2	15.00	16.00	1.07	23.88	29.22	37.20	**	21.79	26.39	32.85	**
1.0	1.0	1.1	1.1	1.1	1.1	1.1	1.1	1.1	1.1	1.1	1.1	1.1	1.2	1.2											
67.8	72.8	77.8	82.8	87.8	93.8	99.8	105.8	112.8	120.3	127.8	137.8	145.3	155.3	165.3	7.50	8.00	1.07	10.50	12.36	15.91	22.55	8.36	10.18	12.91	17.68
1.0	1.0	1.1	1.1	1.1	1.1	1.1	1.1	1.1	1.1	1.1	1.1	1.1	1.2	1.2											
70.4	75.4	80.4	85.4	90.4	—	—	—	—	—	—	—	—	—	—	5.90	6.30	1.07	6.95	8.53	10.96	15.53	*	*	*	*
1.0	1.0	1.1	1.1	1.1	—	—	—	—	—	—	—	—	—	—	*	*									
57.2	62.2	67.2	72.2	77.2	83.2	89.2	95.2	102.2	109.7	117.2	127.2	134.7	144.7	154.7	14.00	15.00	1.07	22.08	27.07	34.56	47.31	20.08	24.37	30.47	39.21
1.0	1.0	1.1	1.1	1.1	1.1	1.1	1.1	1.1	1.1	1.1	1.1	1.1	1.2	1.2											
71.0	76.0	81.0	86.0	91.0	—	—	—	—	—	—	—	—	—	—	5.50	5.90	1.07	6.17	7.55	9.69	13.72	*	*	*	*
1.0	1.0	1.1	1.1	1.1	—	—	—	—	—	—	—	—	—	—	*	*									
62.2	67.2	72.2	77.2	82.2	88.2	94.2	100.2	107.2	114.7	122.2	132.2	139.7	149.7	159.7	10.90	11.80	1.08	16.45	20.22	25.96	36.33	14.62	17.82	22.52	30.19
1.0	1.0	1.1	1.1	1.1	1.1	1.1	1.1	1.1	1.1	1.1	1.1	1.1	1.2	1.2											
65.3	70.3	75.3	80.3	85.3	91.3	97.3	103.3	110.3	117.8	125.3	135.3	142.8	152.8	162.8	9.00	9.75	1.08	12.90	15.87	20.42	28.83	11.16	13.61	17.26	23.50
1.0	1.0	1.1	1.1	1.1	1.1	1.1	1.1	1.1	1.1	1.1	1.1	1.1	1.2	1.2											
66.1	71.1	76.1	81.1	86.1	92.1	98.1	104.1	111.1	118.6	126.1	136.1	143.6	153.6	163.6	8.50	9.25	1.09	11.96	14.71	18.93	26.77	10.23	12.47	15.83	21.61
1.0	1.0	1.1	1.1	1.1	1.1	1.1	1.1	1.1	1.1	1.1	1.1	1.1	1.2	1.2											
63.0	68.0	73.0	78.0	83.0	89.0	95.0	101.0	108.0	115.5	123.0	133.0	140.5	150.5	160.5	10.30	11.30	1.10	15.39	18.93	24.33	34.16	13.54	16.50	20.89	28.16
1.0	1.0	1.1	1.1	1.1	1.1	1.1	1.1	1.1	1.1	1.1	1.1	1.1	1.2	1.2											
61.3	66.3	71.3	76.3	81.3	87.3	93.3	99.3	106.3	113.8	121.3	131.3	138.3	148.8	158.8	11.30	12.50	1.11	17.24	21.19	27.20	37.98	15.34	18.69	23.60	31.49
1.0	1.0	1.1	1.1	1.1	1.1	1.1	1.1	1.1	1.1	1.1	1.1	1.1	1.2	1.2											
64.6	69.6	74.6	79.6	84.6	90.6	96.6	102.6	109.6	117.1	124.6	134.6	142.1	152.1	162.1	9.25	10.30	1.11	13.43	16.52	21.26	29.99	11.62	14.17	17.97	24.42
1.0	1.0	1.1	1.1	1.1	1.1	1.1	1.1	1.1	1.1	1.1	1.1	1.1	1.2	1.2											
72.7	77.7	82.7	87.7	92.7	—	—	—	—	—	—	—	—	—	—	4.40	4.90	1.12	4.04	4.92	6.27	8.79	*	*	*	*
1.0	1.0	1.1	1.1	1.1	—	—	—	—	—	—	—	—	—	—	*	*									
63.8	68.8	73.8	78.8	83.8	89.8	95.8	101.8	108.8	116.3	123.8	133.8	141.3	151.3	161.3	9.75	10.90	1.12	14.37	17.67	22.73	32.00	12.67	15.46	19.60	26.57
1.0	1.0	1.1	1.1	1.1	1.1	1.1	1.1	1.1	1.1	1.1	1.1	1.1	1.2	1.2											
60.4	65.4	70.4	75.4	80.4	86.4	92.4	98.4	105.4	112.9	120.4	130.4	137.9	147.9	157.9	11.80	13.20	1.12	18.16	22.31	28.61	39.83	16.37	19.93	25.14	33.40
1.0	1.0	1.1	1.1	1.1	1.1	1.1	1.1	1.1	1.1	1.1	1.1	1.1	1.2	1.2											
72.3	77.3	82.3	87.3	92.3	—	—	—	—	—	—	—	—	—	—	4.65	5.20	1.12	4.54	5.54	7.08	9.96	*	*	*	*
1.0	1.0	1.1	1.1	1.1	—	—	—	—	—	—	—	—	—	—	*	*									
59.2	64.2	69.2	74.2	79.2	85.2	91.2	97.2	104.2	111.7	119.2	129.2	136.7	146.7	156.7	12.50	14.00	1.12	19.43	23.86	30.58	42.34	17.61	21.42	26.96	35.50
1.0	1.0	1.1	1.1	1.1	1.1	1.1	1.1	1.1	1.1	1.1	1.1	1.1	1.2	1.2											
68.8	73.8	78.8	83.8	88.8	—	—	—	—	—	—	—	—	—	—	6.70	7.50	1.12	8.56	10.52	13.54	19.22	*	*	*	*
1.0	1.0	1.1	1.1	1.1	—	—	—	—	—	—	—	—	—	—	*	*									

* = Diameters below RMA minimum for other than Cog-Belt V-belts. Use with Super Power-Wedge V-belts will result in reduced life and loss of efficiency.

⚠ **WARNING** ** = Sheave Rim Speed in excess of 6500 feet per minute - see Page 236

Arc-Length Correction Factors are located beneath Center Distance Values

POWER-WEDGE PRE-ENGINEERED DRIVE SELECTION TABLES

5V/5VX PRE-ENGINEERED TABLES RATIO 1.13 - 1.20

Driven Speed for Motor Speed of				Sheave Outside Diameters		V-Belt Number and Center Distance (other sizes may be available, see page 214)																					
690 RPM	870 RPM	1160 RPM	1750 RPM	Small Sheave	Large Sheave	Speed Ratio	5VX 500	5VX 530	5VX 560	5VX 600	5VX 630	5VX 670	5VX 710	5VX 750	5VX 800	5VX 850	5VX 900	5VX 950	5VX 1000	5VX 1060	5VX 1120	5VX 1180	5VX 1250	5VX 1320	5VX 1400	5VX 1500
613	773	1031	1556	4.90	5.50	1.13	16.8	18.3	19.8	21.8	23.3	25.3	27.3	29.3	31.8	34.3	36.8	39.3	41.8	44.8	47.8	50.8	54.3	57.8	61.8	66.8
			*	*			0.8	0.9	0.9	0.9	0.9	0.9	0.9	0.9	0.9	0.9	0.9	1.0	1.0	1.0	1.0	1.0	1.0	1.0	1.0	1.0
612	772	1030	1553	8.00	9.00	1.13	11.6	13.1	14.6	16.6	18.1	20.1	22.1	24.1	26.6	29.1	31.6	34.1	36.6	39.6	42.6	45.8	49.1	52.6	56.6	61.6
							0.8	0.9	0.9	0.9	0.9	0.9	0.9	0.9	0.9	0.9	0.9	1.0	1.0	1.0	1.0	1.0	1.0	1.0	1.0	1.0
611	771	1028	1551	7.10	8.00	1.13	13.1	14.6	16.1	18.1	19.6	21.6	23.6	25.8	28.1	30.6	33.1	35.6	38.1	41.1	44.1	47.1	50.6	54.1	58.1	63.1
							0.8	0.9	0.9	0.9	0.9	0.9	0.9	0.9	0.9	0.9	0.9	1.0	1.0	1.0	1.0	1.0	1.0	1.0	1.0	1.0
611	771	1027	1550	6.30	7.10	1.13	14.5	16.0	17.5	19.5	21.0	23.0	25.0	27.0	29.5	32.0	34.5	37.0	39.5	42.5	45.5	48.5	52.0	55.5	59.5	64.5
				*	*		0.8	0.9	0.9	0.9	0.9	0.9	0.9	0.9	0.9	0.9	0.9	1.0	1.0	1.0	1.0	1.0	1.0	1.0	1.0	1.0
608	766	1022	1542	7.50	8.50	1.14	12.4	13.9	15.4	17.4	18.9	20.9	22.9	24.9	27.4	29.9	32.4	34.9	37.4	40.4	43.4	46.4	49.9	53.4	57.4	62.4
							0.8	0.9	0.9	0.9	0.9	0.9	0.9	0.9	0.9	0.9	0.9	1.0	1.0	1.0	1.0	1.0	1.0	1.0	1.0	1.0
607	765	1020	1539	5.20	5.90	1.14	16.3	17.8	19.3	21.3	22.8	24.8	26.8	28.8	31.3	33.8	36.3	38.8	41.3	44.3	47.3	50.3	53.8	57.3	61.3	66.3
				*	*		0.8	0.9	0.9	0.9	0.9	0.9	0.9	0.9	0.9	0.9	0.9	1.0	1.0	1.0	1.0	1.0	1.0	1.0	1.0	1.0
607	765	1020	1539	13.20	15.00	1.14	—	—	—	—	—	—	—	—	17.8	20.3	22.8	25.3	27.8	30.8	33.8	36.8	40.3	43.8	47.8	52.8
							—	—	—	—	—	—	—	—	0.9	0.9	0.9	09	1.0	1.0	1.0	1.0	1.0	1.0	1.0	1.0
606	765	1019	1538	5.90	6.70	1.14	15.1	16.6	18.1	20.1	21.6	23.6	25.6	27.6	30.1	32.6	35.1	37.6	40.1	43.1	46.1	49.1	52.6	56.1	60.1	65.1
				*	*		0.8	0.9	0.9	0.9	0.9	0.9	0.9	0.9	0.9	0.9	0.9	1.0	1.0	1.0	1.0	1.0	1.0	1.0	1.0	1.0
603	761	1014	1530	14.00	16.00	1.14	—	—	—	—	—	—	—	—	—	18.9	21.4	23.9	26.4	29.4	32.4	35.4	38.9	42.4	46.4	51.4
							—	—	—	—	—	—	—	—	—	0.9	0.9	0.9	1.0	1.0	1.0	1.0	1.0	1.0	1.0	1.0
602	759	1012	1527	9.00	10.30	1.15	—	11.3	12.8	14.8	16.3	18.3	20.3	22.3	24.8	27.3	29.8	32.3	34.8	37.8	40.8	43.8	47.3	50.8	54.8	59.8
							—	0.8	0.9	0.9	0.9	0.9	0.9	0.9	0.9	0.9	0.9	1.0	1.0	1.0	1.0	1.0	1.0	1.0	1.0	1.0
602	758	1011	1526	10.30	11.80	1.15	—	—	—	12.6	14.1	16.1	18.1	20.1	22.6	25.1	27.6	30.1	32.6	35.6	38.6	41.6	45.1	48.6	52.6	57.6
							—	—	—	0.9	0.9	0.9	0.9	0.9	0.9	0.9	0.9	0.9	1.0	1.0	1.0	1.0	1.0	1.0	1.0	1.0
601	758	1010	1524	5.50	6.30	1.15	15.7	17.2	18.7	20.7	22.2	24.2	26.2	28.2	30.7	33.2	35.7	38.2	40.7	43.7	46.7	49.7	53.2	56.7	60.7	65.7
				*	*		0.8	0.9	0.9	0.9	0.9	0.9	0.9	0.9	0.9	0.9	0.9	1.0	1.0	1.0	1.0	1.0	1.0	1.0	1.0	1.0
601	758	1010	1524	10.90	12.50	1.15	—	—	—	—	—	15.1	17.1	19.1	21.6	24.1	26.6	29.1	31.6	34.6	37.6	40.6	44.1	47.6	51.6	56.6
							—	—	—	—	—	0.9	0.9	0.9	0.9	0.9	0.9	0.9	1.0	1.0	1.0	1.0	1.0	1.0	1.0	1.0
601	757	1010	1523	8.50	9.75	1.15	10.6	12.2	13.7	15.7	17.2	19.2	21.2	23.2	25.7	28.2	307	33.2	35.7	38.7	41.7	44.7	48.2	51.7	55.7	60.7
							0.8	0.8	0.9	0.9	0.9	0.9	0.9	0.9	0.9	0.9	0.9	1.0	1.0	1.0	1.0	1.0	1.0	1.0	1.0	1.0
596	751	1002	1511	8.00	9.25	1.16	11.4	12.9	14.4	16.4	17.9	19.9	21.9	23.9	26.4	28.9	31.4	33.9	36.4	39.4	42.4	45.4	48.9	52.4	56.4	61.4
							0.8	0.8	0.9	0.9	0.9	0.9	0.9	0.9	0.9	0.9	0.9	1.0	1.0	1.0	1.0	1.0	1.0	1.0	1.0	1.0
595	750	999	1508	9.75	11.30	1.16	—	—	—	13.4	14.9	16.9	19.0	21.0	23.5	26.0	28.5	31.0	33.5	36.5	39.5	42.5	46.0	49.5	53.5	58.5
							—	—	—	0.9	0.9	0.9	0.9	0.9	0.9	0.9	0.9	0.9	1.0	1.0	1.0	1.0	1.0	1.0	1.0	1.0
590	744	992	1496	11.30	13.20	1.17	—	—	—	—	—	14.2	16.2	18.2	20.7	23.2	25.7	28.2	30.7	33.7	26.7	39.7	43.2	46.7	50.7	55.7
							—	—	—	—	—	0.9	0.9	0.9	0.9	0.9	0.9	0.9	1.0	1.0	1.0	1.0	1.0	1.0	1.0	1.0
590	744	992	1496	16.00	18.70	1.17	—	—	—	—	—	—	—	—	—	—	—	20.2	22.7	25.7	28.7	31.7	35.2	38.7	42.7	47.7
							—	—	—	—	—	—	—	—	—	—	—	0.9	0.9	1.0	1.0	1.0	1.0	1.0	1.0	1.0
585	737	983	1483	9.25	10.90	1.18	—	—	12.1	14.2	15.7	17.7	19.7	21.7	24.2	26.7	29.2	31.7	34.2	37.2	40.2	43.2	46.7	50.2	54.2	59.2
							—	—	0.9	0.9	0.9	0.9	0.9	0.9	0.9	0.9	0.9	0.9	1.0	1.0	1.0	1.0	1.0	1.0	1.0	1.0
582	734	978	1475	4.40	5.20	1.19	17.5	19.0	20.5	22.5	24.0	26.0	28.0	30.0	32.5	35.0	37.5	40.0	42.5	45.5	48.5	51.5	55.0	58.5	62.5	67.5
				*	*		0.8	0.9	0.9	0.9	0.9	0.9	0.9	0.9	0.9	0.9	0.9	1.0	1.0	1.0	1.0	1.0	1.0	1.0	1.0	1.0
581	733	977	1475	4.65	5.50	1.19	17.0	18.5	20.0	22.0	23.5	25.5	27.5	29.5	32.0	34.5	37.0	39.5	42.0	45.0	48.0	51.0	54.5	58.0	62.0	67.0
				*	*		0.8	0.9	0.9	0.9	0.9	0.9	0.9	0.9	0.9	0.9	0.9	1.0	1.0	1.0	1.0	1.0	1.0	1.0	1.0	1.0
581	732	976	1473	11.80	14.00	1.19	—	—	—	—	—	—	15.2	17.2	19.7	22.2	24.7	27.2	29.7	32.7	35.7	38.7	42.2	45.7	49.7	54.7
							—	—	—	—	—	—	0.9	0.9	0.9	0.9	0.9	0.9	1.0	1.0	1.0	1.0	1.0	1.0	1.0	1.0
578	729	972	1466	6.30	7.50	1.19	14.1	15.7	17.2	19.2	20.7	22.7	24.7	26.7	29.2	31.7	34.2	36.7	39.2	42.2	45.2	48.2	51.7	55.2	59.2	64.2
				*	*		0.8	0.9	0.9	0.9	0.9	0.9	0.9	0.9	0.9	0.9	0.9	1.0	1.0	1.0	1.0	1.0	1.0	1.0	1.0	1.0
576	727	969	1462	6.70	8.00	1.20	13.4	14.9	16.4	18.4	19.9	21.9	23.9	25.9	28.4	30.9	33.4	35.9	38.4	41.4	44.4	47.5	51.0	54.5	58.5	63.5
				*	*		0.8	0.9	0.9	0.9	0.9	0.9	0.9	0.9	0.9	0.9	0.9	1.0	1.0	1.0	1.0	1.0	1.0	1.0	1.0	1.0
575	725	967	1458	7.10	8.50	1.20	12.7	14.2	15.7	17.7	19.2	21.2	23.2	25.2	27.7	30.2	32.7	35.2	37.7	40.7	43.7	46.7	50.2	53.7	57.7	62.7
							0.8	0.8	0.9	0.9	0.9	0.9	0.9	0.9	0.9	0.9	0.9	1.0	1.0	1.0	1.0	1.0	1.0	1.0	1.0	1.0
574	724	965	1456	12.50	15.00	1.20	—	—	—	—	—	—	—	15.9	18.4	20.9	23.4	25.9	28.4	31.4	34.4	37.4	40.9	44.4	48.4	53.4
							—	—	—	—	—	—	—	0.9	0.9	0.9	0.9	0.9	1.0	1.0	1.0	1.0	1.0	1.0	1.0	1.0
574	723	964	1455	7.50	9.00	1.20	12.0	13.5	15.0	17.0	18.5	20.5	22.5	24.5	27.0	29.5	32.0	34.5	37.0	40.0	43.0	46.0	49.5	53.0	57.0	62.0
							0.8	0.8	0.9	0.9	0.9	0.9	0.9	0.9	0.9	0.9	0.9	1.0	1.0	1.0	1.0	1.0	1.0	1.0	1.0	1.0

* = Diameters below RMA minimum for other than Cog-Belt V-belts. Use with Super Power-Wedge V-belts will result in reduced life and loss of efficiency.

⚠ **WARNING** ** = Sheave Rim Speed in excess of 6500 feet per minute - see Page 236

Arc-Length Correction Factors are located beneath Center Distance Values

POWER-WEDGE PRE-ENGINEERED DRIVE SELECTION TABLES

5V/5VX PRE-ENGINEERED TABLES RATIO 1.13 - 1.20

V-Belt Number and Center Distance (Other sizes may be available, see page 214)																		Rated HP per Belt (Includes Added HP for Speed Ratio) Power-Wedge Cog-Belt (5VX) RPM of Small Sheave				Rated HP per Belt (Includes Added HP for Speed Ratio) Super Power-Wedge Belt (5V) RPM of Small Sheave			
5VX 1600	5VX 1700	5VX 1800	5VX 1900	5VX 2000	5V 2120	5V 2240	5V 2360	5V 2500	5V 2650	5V 2800	5V 3000	5V 3150	5V 3350	5V 3550	Small Sheave	Large Sheave	Speed Ratio	690 RPM	870 RPM	1160 RPM	1750 RPM	690 RPM	870 RPM	1160 RPM	1170 RPM
71.8	76.8	81.8	86.8	91.8	—	—	—	—	—	—	—	—	—	—	4.90	5.50	1.13	5.03	6.16	7.88	1.11	*	*	*	*
1.0	1.0	1.1	1.1	1.1	—	—	—	—	—	—	—	—	—	—	*	*									
66.6	71.6	76.6	81.6	86.6	92.6	98.6	104.6	111.6	119.1	126.6	136.6	144.1	154.1	164.1	8.00	9.00	1.13	11.06	13.60	17.52	24.82	9.43	11.50	14.60	20.01
1.0	1.0	1.1	1.1	1.1	1.1	1.1	1.1	1.1	1.1	1.1	1.1	1.1	1.2	1.2											
68.1	73.1	78.1	83.1	88.1	94.1	100.1	106.1	113.1	120.6	128.1	138.1	145.6	155.6	165.6	7.10	8.00	1.13	9.34	11.48	14.78	20.97	7.73	9.42	11.95	16.40
1.0	1.0	1.1	1.1	1.1	1.1	1.1	1.1	1.1	1.1	1.1	1.1	1.1	1.2	1.2											
69.5	74.5	79.5	84.5	89.5	—	—	—	—	—	—	—	—	—	—	6.30	7.10	1.13	7.79	9.56	12.30	17.45	*	*	*	*
1.0	1.0	1.1	1.1	1.1	—	—	—	—	—	—	—	—	—	—	*	*									
67.4	72.4	77.4	82.4	87.4	93.4	99.4	105.4	112.4	119.9	127.4	137.4	144.9	154.9	164.9	7.50	8.50	1.14	10.16	12.49	16.09	22.83	8.49	10.35	13.13	18.02
1.0	1.0	1.1	1.1	1.1	1.1	1.1	1.1	1.1	1.1	1.1	1.1	1.1	1.2	1.2											
71.3	76.3	81.3	86.3	91.3	—	—	—	—	—	—	—	—	—	—	5.20	5.90	1.14	5.68	6.96	8.93	12.63	*	*	*	*
1.0	1.0	1.1	1.1	1.1	—	—	—	—	—	—	—	—	—	—	*	*									
57.8	62.8	67.8	72.8	77.8	83.8	89.8	95.8	102.8	110.3	117.8	127.8	135.3	145.3	155.3	13.20	15.00	1.14	20.76	25.47	32.58	44.92	18.83	22.89	28.73	37.47
1.0	1.0	1.1	1.1	1.1	1.1	1.1	1.1	1.1	1.1	1.1	1.1	1.1	1.2	1.2											
70.1	75.1	80.1	85.1	90.1	—	—	—	—	—	—	—	—	—	—	5.90	6.70	1.14	7.06	8.67	11.14	15.81	*	*	*	*
1.0	1.0	1.1	1.1	1.1	—	—	—	—	—	—	—	—	—	—	*	*									
56.4	61.4	66.4	71.4	76.4	82.4	88.4	94.4	101.4	108.9	116.4	126.4	133.9	143.9	153.9	14.00	16.00	1.14	22.19	27.21	34.74	47.59	20.22	24.54	30.70	39.55
1.0	1.0	1.1	1.1	1.1	1.1	1.1	1.1	1.1	1.1	1.1	1.1	1.1	1.2	1.2											
64.8	69.8	74.8	79.8	84.8	90.8	96.8	102.8	109.8	117.3	124.8	134.8	142.3	152.3	162.3	9.00	10.30	1.15	13.01	16.01	20.61	29.11	11.29	13.78	17.48	23.84
1.0	1.0	1.1	1.1	1.1	1.1	1.1	1.1	1.1	1.1	1.1	1.1	1.1	1.2	1.2											
62.6	67.6	72.6	77.6	82.6	88.6	94.6	100.6	107.6	115.1	122.6	132.6	140.1	150.1	160.1	10.30	11.80	1.15	15.45	19.00	24.42	34.30	13.67	16.67	21.12	28.50
1.0	1.0	1.1	1.1	1.1	1.1	1.1	1.1	1.1	1.1	1.1	1.1	1.1	1.2	1.2											
70.7	75.7	80.7	85.7	90.7	—	—	—	—	—	—	—	—	—	—	5.50	6.30	1.15	6.28	7.69	9.88	14.00	*	*	*	*
1.0	1.0	1.1	1.1	1.1	—	—	—	—	—	—	—	—	—	—	*	*									
61.6	66.6	71.6	76.6	81.6	87.6	93.6	99.6	106.6	114.1	121.6	13.6	139.1	149.1	159.1	10.90	12.50	1.15	16.56	20.36	26.15	36.61	14.76	17.99	22.75	30.53
1.0	1.0	1.1	1.1	1.1	1.1	1.1	1.1	1.1	1.1	1.1	1.1	1.1	1.2	1.2											
65.7	70.7	75.7	80.7	85.7	91.7	97.7	103.7	110.7	118.2	125.7	135.7	143.2	153.2	163.2	8.50	9.75	1.15	12.07	14.84	19.12	27.05	10.37	12.64	16.05	21.95
1.0	1.0	1.1	1.1	1.1	1.1	1.1	1.1	1.1	1.1	1.1	1.1	1.1	1.2	1.2											
66.4	71.4	76.4	81.4	86.4	92.4	98.4	104.5	111.5	119.0	126.5	136.5	144.0	154.0	164.0	8.00	9.25	1.16	11.12	13.67	17.61	24.96	9.43	11.50	14.60	20.01
1.0	1.0	1.1	1.1	1.1	1.1	1.1	1.1	1.1	1.1	1.1	1.1	1.1	1.2	1.2											
63.5	68.5	73.5	78.5	83.5	89.5	95.5	101.5	108.5	116.0	123.5	133.5	141.0	151.0	161.0	9.75	11.30	1.16	14.42	17.74	22.82	32.14	12.67	15.46	19.60	26.57
1.0	1.0	1.1	1.1	1.1	1.1	1.1	1.1	1.1	1.1	1.1	1.1	1.1	1.2	1.2											
60.8	65.8	70.8	75.8	80.8	86.8	92.8	98.8	105.8	113.3	120.8	130.8	138.3	148.3	158.3	11.30	13.20	1.17	17.30	21.26	27.29	38.12	15.48	18.86	23.82	31.83
1.0	1.0	1.1	1.1	1.1	1.1	1.1	1.1	1.1	1.1	1.1	1.1	1.1	1.2	1.2											
52.7	57.7	62.7	67.7	72.7	78.7	84.7	90.7	97.7	105.2	112.7	122.7	130.2	140.2	150.2	16.00	18.70	1.17	25.73	31.48	39.97	*	23.60	28.53	35.36	*
1.0	1.0	1.1	1.1	1.1	1.1	1.1	1.1	1.1	1.1	1.1	1.1	1.1	1.2	1.2											
64.2	69.2	74.2	79.2	84.2	90.2	96.2	102.2	109.2	116.7	124.2	134.2	1417.	151.7	161.7	9.25	10.90	1.18	13.48	16.59	21.35	30.13	11.75	14.34	18.19	24.76
1.0	1.0	1.1	1.1	1.1	1.1	1.1	1.1	1.1	1.1	1.1	1.1	1.1	1.2	1.2											
72.5	77.5	82.5	87.5	92.5	—	—	—	—	—	—	—	—	—	—	4.40	5.20	1.19	4.15	5.06	6.46	9.07	*	*	*	*
1.0	1.0	1.1	1.1	1.1	—	—	—	—	—	—	—	—	—	—	*	*									
72.0	77.0	82.0	87.0	92.0	—	—	—	—	—	—	—	—	—	—	4.65	5.50	1.19	4.65	5.68	7.26	10.24	*	*	*	*
1.0	1.0	1.1	1.1	1.1	—	—	—	—	—	—	—	—	—	—	*	*									
59.7	64.7	69.7	74.7	79.7	85.7	91.7	97.7	104.7	112.2	119.7	129.7	137.2	147.2	157.2	11.80	14.00	1.19	18.27	22.45	28.80	40.11	16.48	20.08	25.34	33.69
1.0	1.0	1.1	1.1	1.1	1.1	1.1	1.1	1.1	1.1	1.1	1.1	1.1	1.2	1.2											
69.2	74.2	79.2	84.2	89.2	—	—	—	—	—	—	—	—	—	—	6.30	7.50	1.19	7.90	9.70	12.49	17.74	*	*	*	*
1.0	1.0	1.1	1.1	1.1	—	—	—	—	—	—	—	—	—	—	*	*									
68.5	73.5	78.5	83.5	88.5	—	—	—	—	—	—	—	—	—	—	6.70	8.00	1.20	8.67	10.66	13.73	19.50	*	*	*	*
1.0	1.0	1.1	1.1	1.1	—	—	—	—	—	—	—	—	—	—	*	*									
67.7	72.7	77.7	82.7	87.7	93.7	99.7	105.7	112.7	120.2	127.7	137.7	145.2	155.2	165.2	7.10	8.50	1.20	9.45	11.62	14.96	21.25	7.85	9.56	12.14	16.69
1.0	1.0	1.1	1.1	1.1	1.1	1.1	1.1	1.1	1.1	1.1	1.1	1.1	1.2	1.2											
58.4	63.4	68.4	73.4	78.4	84.4	90.4	96.4	103.4	110.9	118.4	128.4	135.9	145.9	155.9	12.50	15.00	1.20	19.54	24.00	30.75	42.62	17.72	21.56	27.15	35.79
1.0	1.0	1.1	1.1	1.1	1.1	1.1	1.1	1.1	1.1	1.1	1.1	1.1	1.2	1.2											
67.0	72.0	77.0	82.0	87.0	93.0	99.0	105.0	112.0	119.5	127.0	137.0	144.5	154.5	164.5	7.50	9.00	1.20	10.22	12.56	16.19	22.97	8.61	10.49	13.33	18.31
1.0	1.0	1.1	1.1	1.1	1.1	1.1	1.1	1.1	1.1	1.1	1.1	1.1	1.2	1.2											

* = Diameters below RMA minimum for other than Cog-Belt V-belts. Use with Super Power-Wedge V-belts will result in reduced life and loss of efficiency.

⚠ **WARNING** ** = Sheave Rim Speed in excess of 6500 feet per minute - see Page 236

Arc-Length Correction Factors are located beneath Center Distance Values

POWER-WEDGE PRE-ENGINEERED DRIVE SELECTION TABLES

5V/5VX PRE-ENGINEERED TABLES RATIO 1.21 - 1.28

Driven Speed for Motor Speed of				Sheave Outside Diameters		V-Belt Number and Center Distance (other sizes may be available, see page 214)																					
690 RPM	870 RPM	1160 RPM	1750 RPM	Small Sheave	Large Sheave	Speed Ratio	5VX 500	5VX 530	5VX 560	5VX 600	5VX 630	5VX 670	5VX 710	5VX 750	5VX 800	5VX 850	5VX 900	5VX 950	5VX 1000	5VX 1060	5VX 1120	5VX 1180	5VX 1250	5VX 1320	5VX 1400	5VX 1500
572	721	961	1450	5.90	7.10	1.21	14.8	16.3	17.8	79.8	21.3	23.3	25.3	27.3	29.8	32.3	34.8	37.3	39.8	42.8	45.8	48.8	52.3	55.8	59.8	64.8
				*	*		0.8	0.9	0.9	0.9	0.9	0.9	0.9	0.9	0.9	0.9	0.9	1.0	1.0	1.0	1.0	1.0	1.0	1.0	1.0	1.0
571	720	960	1448	4.90	5.90	1.21	16.5	18.0	19.5	21.5	23.0	25.0	27.0	29.0	31.5	34.0	36.5	39.0	41.5	44.5	47.5	50.5	54.0	57.5	61.5	66.5
				*	*		0.8	0.9	0.9	0.9	0.9	0.9	0.9	0.9	0.9	0.9	0.9	1.0	1.0	1.0	1.0	1.0	1.0	1.0	1.0	1.0
569	718	957	1443	9.75	11.80	1.21	—	—	—	13.0	14.5	16.5	18.5	20.5	23.1	25.6	28.1	30.6	33.1	36.1	39.12	42.1	45.6	49.1	53.1	58.1
							—	—	—	0.9	0.9	0.9	0.9	0.9	0.9	0.9	0.9	0.9	1.0	1.0	1.0	1.0	1.0	1.0	1.0	1.0
569	717	956	1443	10.90	13.20	1.21	—	—	—	—	—	14.5	16.5	18.5	21.0	23.5	26.0	28.5	31.1	34.1	37.1	40.1	43.6	47.1	51.1	56.1
							—	—	—	—	—	0.9	0.9	0.9	0.9	0.9	0.9	0.9	1.0	1.0	1.0	1.0	1.0	1.0	1.0	1.0
569	717	956	1442	9.00	10.90	1.21	—	—	12.3	14.3	15.8	17.8	19.8	21.8	24.4	26.9	29.4	31.9	34.4	37.4	40.4	43.4	46.9	50.4	54.4	59.4
							—	—	0.9	0.9	0.9	0.9	0.9	0.9	0.9	0.9	0.9	0.9	1.0	1.0	1.0	1.0	1.0	1.0	1.0	1.0
568	717	956	1442	13.20	16.00	1.21	—	—	—	—	—	—	—	—	17.0	19.5	22.0	24.5	27.0	30.0	33.0	36.0	39.5	43.0	47.0	52.0
							—	—	—	—	—	—	—	—	0.9	0.9	0.9	0.9	1.0	1.0	1.0	1.0	1.0	1.0	1.0	1.0
568	716	955	1441	8.50	10.30	1.21	—	11.7	13.2	15.2	16.7	18.7	20.7	22.7	25.2	27.7	30.2	32.7	35.2	38.2	41.2	44.2	47.7	51.2	55.2	60.2
							—	0.8	0.9	0.9	0.9	0.9	0.9	0.9	0.9	0.9	0.9	0.9	1.0	1.0	1.0	1.0	1.0	1.0	1.0	1.0
568	716	954	1440	5.20	6.30	1.22	16.0	17.5	19.0	21.0	22.5	24.5	26.5	28.5	31.0	33.5	36.0	38.5	41.0	44.0	47.0	50.0	53.5	57.0	61.0	66.0
				*	*		0.8	0.9	0.9	0.9	0.9	0.9	0.9	0.9	0.9	0.9	0.9	1.0	1.0	1.0	1.0	1.0	1.0	1.0	1.0	1.0
568	716	954	1440	10.30	12.50	1.22	—	—	—	—	13.5	15.6	17.6	19.6	22.1	24.6	27.1	29.6	32.1	35.1	38.1	41.1	44.6	48.1	52.1	57.1
							—	—	—	—	0.9	0.9	0.9	0.9	0.9	0.9	0.9	0.9	1.0	1.0	1.0	1.0	1.0	1.0	1.0	1.0
565	712	950	1433	8.00	9.75	1.22	11.0	12.5	14.0	16.0	17.5	19.5	21.5	23.5	26.0	28.5	31.0	33.5	36.0	39.0	42.1	45.1	48.6	523.1	56.1	61.1
							0.8	0.8	0.9	0.9	0.9	0.9	0.9	0.9	0.9	0.9	0.9	0.9	1.0	1.0	1.0	1.0	1.0	1.0	1.0	1.0
565	712	949	1432	5.50	6.70	1.22	15.4	16.9	18.4	20.4	21.9	23.9	25.9	27.9	30.4	32.9	35.4	37.9	40.4	43.4	46.4	49.4	52.9	56.4	60.4	65.4
				*	*		0.8	0.9	0.9	0.9	0.9	0.9	0.9	0.9	0.9	0.9	0.9	1.0	1.0	1.0	1.0	1.0	1.0	1.0	1.0	1.0
564	711	948	1430	9.25	11.30	1.22	—	—	11.8	13.8	15.3	17.3	19.3	21.3	23.8	26.3	28.8	31.3	33.8	36.8	39.8	42.8	46.3	49.8	53.9	58.9
							—	—	0.8	0.9	0.9	0.9	0.9	0.9	0.9	0.9	0.9	0.9	1.0	1.0	1.0	1.0	1.0	1.0	1.0	1.0
558	704	938	1415	7.50	9.25	1.24	11.8	13.3	14.8	16.8	18.3	20.3	22.3	24.3	26.8	29.3	31.8	34.3	36.8	39.8	42.8	45.8	49.3	52.8	56.8	61.8
							0.8	0.8	0.9	0.9	0.9	0.9	0.9	0.9	0.9	0.9	0.9	0.9	1.0	1.0	1.0	1.0	1.0	1.0	1.0	1.0
556	701	935	1410	11.30	14.00	1.24	—	—	—	—	—	—	15.6	17.6	20.1	22.6	25.1	27.6	30.1	33.1	36.1	39.1	42.6	46.1	50.1	55.1
							—	—	—	—	—	—	0.9	0.9	0.9	0.9	0.9	0.9	1.0	1.0	1.0	1.0	1.0	1.0	1.0	1.0
553	697	929	1402	15.00	18.70	1.25	—	—	—	—	—	—	—	—	—	—	18.4	21.0	23.5	26.5	29.5	32.5	36.0	39.5	43.5	48.5
							—	—	—	—	—	—	—	—	—	—	0.9	0.9	0.9	1.0	1.0	1.0	1.0	1.0	1.0	1.0
549	693	924	1394	4.40	5.50	1.26	17.2	18.7	20.2	22.2	23.7	25.7	27.7	29.7	32.2	34.7	37.2	39.7	42.2	45.2	48.2	51.2	54.7	58.2	62.2	67.2
				*	*		0.8	0.9	0.9	0.9	0.9	0.9	0.9	0.9	0.9	0.9	0.9	1.0	1.0	1.0	1.0	1.0	1.0	1.0	1.0	1.0
548	691	922	1391	9.00	11.30	1.26	—	—	12.0	14.0	15.5	17.5	19.5	21.5	24.0	26.5	29.0	31.5	34.0	37.0	40.0	43.0	46.5	50.0	54.0	59.0
							—	—	0.8	0.9	0.9	0.9	0.9	0.9	0.9	0.9	0.9	0.9	1.0	1.0	1.0	1.0	1.0	1.0	1.0	1.0
543	684	912	1376	7.10	9.00	1.27	12.3	13.8	15.3	17.3	18.8	20.8	22.8	24.8	27.3	29.8	32.3	34.8	37.3	40.3	43.3	46.3	49.8	53.3	57.3	62.3
							0.8	0.8	0.9	0.9	0.9	0.9	0.9	0.9	0.9	0.9	0.9	0.9	1.0	1.0	1.0	1.0	1.0	1.0	1.0	1.0
542	683	911	1374	11.80	15.00	1.27	13.0	14.5	16.0	18.0	19.5	21.5	23.5	25.5	28.0	30.5	33.0	35.6	38.1	41.1	44.1	47.1	50.6	54.1	58.1	63.1
							0.8	0.8	0.9	0.9	0.9	0.9	0.9	0.9	0.9	0.9	0.9	0.9	1.0	1.0	1.0	1.0	1.0	1.0	1.0	1.0
542	683	911	1373	6.30	8.00	1.27	—	—	—	—	—	—	—	16.4	18.9	21.4	23.9	26.4	28.9	31.9	34.9	37.9	41.4	44.9	48.9	53.9
							—	—	—	—	—	—	—	0.9	0.9	0.9	0.9	0.9	0.9	1.0	1.0	1.0	1.0	1.0	1.0	1.0
542	683	910	1373	6.30	8.00	1.27	13.7	15.2	16.7	18.7	20.3	22.3	24.3	26.3	28.8	31.3	33.8	36.3	38.8	41.8	44.8	47.8	51.3	54.8	58.8	63.8
				*	*		0.8	0.8	0.9	0.9	0.9	0.9	0.9	0.9	0.9	0.9	0.9	0.9	1.0	1.0	1.0	1.0	1.0	1.0	1.0	1.0
541	683	910	1373	4.65	5.90	1.27	16.7	18.2	19.7	21.7	23.2	25.2	27.2	29.2	31.7	34.2	36.7	39.2	41.7	44.7	47.7	50.7	54.2	57.7	61.7	66.7
				*	*		0.8	0.9	0.9	0.9	0.9	0.9	0.9	0.9	0.9	0.9	0.9	1.0	1.0	1.0	1.0	1.0	1.0	1.0	1.0	1.0
541	682	909	1372	5.90	7.50	1.28	14.5	16.0	17.5	19.5	21.0	23.0	25.0	27.0	29.5	32.0	34.5	37.0	39.5	42.5	45.5	48.5	52.0	55.5	59.5	64.5
				*	*		0.8	0.8	0.9	0.9	0.9	0.9	0.9	0.9	0.9	0.9	0.9	1.0	1.0	1.0	1.0	1.0	1.0	1.0	1.0	1.0
540	680	907	1369	9.25	11.80	1.28	—	—	—	13.4	14.9	16.9	18.9	20.9	23.4	25.9	28.4	30.9	33.4	36.4	39.4	42.4	45.9	49.5	53.5	58.5
							—	—	—	0.9	0.9	0.9	0.9	0.9	0.9	0.9	0.9	0.9	1.0	1.0	1.0	1.0	1.0	1.0	1.0	1.0
538	678	905	1365	12.50	16.00	1.28	—	—	—	—	—	—	—	—	17.5	20.0	22.5	25.1	27.6	30.6	33.6	36.6	40.1	43.6	47.6	52.6
							—	—	—	—	—	—	—	—	0.9	0.9	0.9	0.9	0.9	1.0	1.0	1.0	1.0	1.0	1.0	1.0
537	677	903	1363	10.30	13.20	1.28	—	—	—	—	—	15.0	17.0	19.0	21.5	24.0	26.5	29.0	31.5	34.5	37.5	40.5	44.0	47.5	51.5	56.5
							—	—	—	—	—	0.9	0.9	0.9	0.9	0.9	0.9	0.9	1.0	1.0	1.0	1.0	1.0	1.0	1.0	1.0
537	677	903	1362	9.75	12.50	1.28	—	—	—	—	14.0	16.0	18.0	20.0	22.5	25.0	27.5	30.0	32.5	35.5	38.5	41.5	45.0	48.5	52.5	57.5
							—	—	—	—	0.9	0.9	0.9	0.9	0.9	0.9	0.9	1.0	1.0	1.0	1.0	1.0	1.0	1.0	1.0	1.0

* = Diameters below RMA minimum for other than Cog-Belt V-belts. Use with Super Power-Wedge V-belts will result in reduced life and loss of efficiency.

⚠ **WARNING** ** = Sheave Rim Speed in excess of 6500 feet per minute - see Page 236

Arc-Length Correction Factors are located beneath Center Distance Values

POWER-WEDGE PRE-ENGINEERED DRIVE SELECTION TABLES

5V/5VX PRE-ENGINEERED TABLES — RATIO 1.21 - 1.28

V-Belt Number and Center Distance (Other sizes may be available, see page 214)																		Rated HP per Belt (Includes Added HP for Speed Ratio) Power-Wedge Cog-Belt (5VX) RPM of Small Sheave				Rated HP per Belt (Includes Added HP for Speed Ratio) Super Power-Wedge Belt (5V) RPM of Small Sheave			
5VX 1600	5VX 1700	5VX 1800	5VX 1900	5VX 2000	5V 2120	5V 2240	5V 2360	5V 2500	5V 2650	5V 2800	5V 3000	5V 3150	5V 3350	5V 3550	Small Sheave	Large Sheave	Speed Ratio	690 RPM	870 RPM	1160 RPM	1750 RPM	690 RPM	870 RPM	1160 RPM	1170 RPM
69.8	74.8	79.8	84.8	89.8	—	—	—	—	—	—	—	—	—	—	5.90	7.10	1.21	7.12	8.74	11.23	15.95	*	*	*	*
1.0	1.0	1.1	1.1	1.1	—	—	—	—	—	—	—	—	—	—	*	*									
71.5	76.5	81.5	86.5	91.5	—	—	—	—	—	—	—	—	—	—	4.90	5.90	1.21	5.14	6.30	8.06	11.39	*	*	*	*
1.0	1.0	1.1	1.1	1.1	—	—	—	—	—	—	—	—	—	—	*	*									
63.1	68.1	73.1	78.1	83.1	89.1	95.1	101.1	108.1	115.6	123.1	133.1	140.6	150.6	160.6	9.75	11.80	1.21	14.48	17.81	22.91	32.28	12.79	15.60	19.79	26.86
1.0	1.0	1.1	1.1	1.1	1.1	1.1	1.1	1.1	1.1	1.1	1.1	1.1	1.2	1.2											
61.1	66.1	71.1	76.1	81.1	87.1	93.1	99.1	106.1	113.6	121.1	131.1	138.6	148.6	158.6	10.90	13.20	1.21	16.61	20.43	26.24	36.75	14.87	18.13	22.94	30.82
1.0	1.0	1.1	1.1	1.1	1.1	1.1	1.1	1.1	1.1	1.1	1.1	1.1	1.2	1.2											
64.4	69.4	74.4	79.4	84.4	90.4	96.4	102.4	109.4	116.9	124.4	134.4	141.9	151.9	161.9	9.00	10.90	1.21	13.07	16.08	20.70	29.25	11.41	13.92	17.68	24.13
1.0	1.0	1.1	1.1	1.1	1.1	1.1	1.1	1.1	1.1	1.1	1.1	1.1	1.2	1.2											
57.0	62.1	67.1	72.1	77.1	83.1	89.1	95.1	102.1	109.6	117.1	127.1	134.6	144.6	154.6	13.20	16.00	1.21	20.81	25.54	32.67	45.06	18.94	23.03	28.92	37.76
1.0	1.0	1.1	1.1	1.1	1.1	1.1	1.1	1.1	1.1	1.1	1.1	1.1	1.2	1.2											
65.2	70.2	75.2	80.2	85.2	91.2	97.2	103.2	110.2	117.7	125.2	135.2	142.7	152.7	162.7	8.50	10.30	1.21	12.12	14.91	19.21	27.20	10.48	12.79	16.24	22.24
1.0	1.0	1.1	1.1	1.1	1.1	1.1	1.1	1.1	1.1	1.1	1.1	1.1	1.2	1.2											
71.0	76.0	81.0	86.0	91.0	—	—	—	—	—	—	—	—	—	—	5.20	6.30	1.22	5.74	7.03	9.02	12.77	*	*	*	*
1.0	1.0	1.1	1.1	1.1	—	—	—	—	—	—	—	—	—	—	*	*									
62.1	67.1	72.1	77.1	82.1	88.1	94.1	100.1	107.1	114.6	122.1	132.1	139.6	149.6	159.6	10.30	12.50	1.22	15.50	19.07	24.52	34.44	13.79	16.82	21.31	28.79
1.0	1.0	1.1	1.1	1.1	1.1	1.1	1.1	1.1	1.1	1.1	1.1	1.1	1.2	1.2											
66.1	71.1	76.1	81.1	86.1	92.1	98.1	104.1	111.1	118.6	126.1	136.1	143.6	153.6	163.6	8.00	9.75	1.22	11.17	13.74	17.71	25.10	9.55	11.64	14.79	20.30
1.0	1.0	1.1	1.1	1.1	1.1	1.1	1.1	1.1	1.1	1.1	1.1	1.1	1.2	1.2											
70.4	75.4	80.4	85.4	90.4	—	—	—	—	—	—	—	—	—	—	5.50	6.70	1.22	6.63	7.76	9.97	14.14	*	*	*	*
1.0	1.0	1.1	1.1	1.1	—	—	—	—	—	—	—	—	—	—	*	*									
63.9	68.9	73.9	78.9	83.9	89.9	95.9	101.9	108.9	116.4	123.9	133.9	141.4	151.4	161.4	9.25	11.30	1.22	13.54	16.66	21.44	30.27	11.87	14.48	18.39	25.05
1.0	1.0	1.1	1.1	1.1	1.1	1.1	1.1	1.1	1.1	1.1	1.1	1.1	1.2	1.2											
66.8	71.8	76.8	81.8	86.8	92.8	98.8	104.8	111.8	119.3	126.8	136.8	144.3	154.3	164.3	7.50	9.25	1.24	10.22	12.56	16.19	22.97	8.61	10.49	13.33	18.31
1.0	1.0	1.1	1.1	1.1	1.1	1.1	1.1	1.1	1.1	1.1	1.1	1.1	1.2	1.2											
60.1	65.1	70.1	75.1	80.1	86.1	92.1	98.1	105.1	112.6	120.1	130.1	137.6	147.6	157.6	11.30	14.00	1.24	17.35	21.33	27.38	38.26	15.59	19.00	24.01	32.12
1.0	1.0	1.1	1.1	1.1	1.1	1.1	1.1	1.1	1.1	1.1	1.1	1.1	1.2	1.2											
53.5	58.5	63.5	68.5	73.5	79.5	85.5	91.5	98.5	106.0	113.5	123.5	131.0	141.0	151.0	15.00	18.70	1.25	24.02	29.43	37.48	**	22.04	26.70	33.27	**
1.0	1.0	1.1	1.1	1.1	1.1	1.1	1.1	1.1	1.1	1.1	1.1	1.1	1.2	1.2											
72.2	77.2	82.2	87.2	92.2	—	—	—	—	—	—	—	—	—	—	4.40	5.50	1.26	4.20	5.13	6.55	9.21	*	*	*	*
1.0	1.0	1.1	1.1	1.1	—	—	—	—	—	—	—	—	—	—	*	*									
64.0	69.0	74.0	79.0	84.0	90.0	96.0	102.0	109.1	116.6	124.1	134.1	141.6	151.6	161.6	9.00	11.30	1.26	13.12	16.15	20.79	29.39	11.41	13.92	17.68	24.13
1.0	1.0	1.1	1.1	1.1	1.1	1.1	1.1	1.1	1.1	1.1	1.1	1.1	1.2	1.2											
67.3	72.3	77.3	82.3	87.3	93.4	99.4	105.4	112.4	119.9	127.4	137.4	144.9	154.9	164.9	7.10	9.00	1.27	9.50	11.68	15.05	21.39	7.94	9.68	12.29	16.92
1.0	1.0	1.1	1.1	1.1	1.1	1.1	1.1	1.1	1.1	1.1	1.1	1.1	1.2	1.2											
68.1	73.1	78.1	83.1	88.1	—	—	—	—	—	—	—	—	—	—	6.70	8.50	1.27	8.73	10.73	13.82	19.64	*	*	*	*
1.0	1.0	1.1	1.1	1.1	—	—	—	—	—	—	—	—	—	—	*	*									
58.9	63.9	68.9	73.9	78.9	84.9	90.9	96.9	103.9	111.4	118.9	128.9	136.4	146.4	156.4	11.80	15.00	1.27	18.32	22.52	28.89	40.25	16.57	20.19	25.49	33.92
1.0	1.0	1.1	1.1	1.1	1.1	1.1	1.1	1.1	1.1	1.1	1.1	1.1	1.2	1.2											
68.8	73.8	78.8	83.8	88.8	—	—	—	—	—	—	—	—	—	—	6.30	8.00	1.27	7.95	9.77	12.58	17.88	*	*	*	*
1.0	1.0	1.1	1.1	1.1	—	—	—	—	—	—	—	—	—	—	*	*									
71.7	76.7	81.7	86.7	91.7	—	—	—	—	—	—	—	—	—	—	4.65	5.90	1.27	4.70	5.75	7.36	10.38	*	*	*	*
1.0	1.0	1.1	1.1	1.1	—	—	—	—	—	—	—	—	—	—	*	*									
69.5	74.5	79.5	84.5	89.5	—	—	—	—	—	—	—	—	—	—	5.90	7.50	1.28	7.17	8.80	11.33	16.09	*	*	*	*
1.0	1.0	1.1	1.1	1.1	—	—	—	—	—	—	—	—	—	—	*	*									
63.5	68.5	73.5	78.5	83.5	89.5	95.5	101.5	108.5	116.0	123.5	133.5	141.0	151.0	161.0	9.25	11.80	1.28	13.59	16.73	21.54	30.41	11.96	14.60	18.54	25.28
1.0	1.0	1.1	1.1	1.1	1.1	1.1	1.1	1.1	1.1	1.1	1.1	1.1	1.2	1.2											
57.6	62.6	67.6	72.6	77.6	83.6	89.6	95.6	102.6	110.1	117.6	127.6	135.1	145.1	155.1	12.50	16.00	1.28	19.60	24.07	30.84	42.76	17.81	21.68	27.30	36.02
1.0	1.0	1.1	1.1	1.1	1.1	1.1	1.1	1.1	1.1	1.1	1.1	1.1	1.2	1.2											
61.5	66.5	71.5	76.5	81.5	87.5	93.5	99.5	106.5	114.0	121.5	131.5	139.0	149.0	159.0	10.30	13.20	1.28	15.56	19.13	24.61	34.58	13.88	16.93	21.46	29.02
1.0	1.0	1.1	1.1	1.1	1.1	1.1	1.1	1.1	1.1	1.1	1.1	1.1	1.2	1.2											
62.5	67.5	72.5	77.5	82.5	88.5	94.5	100.5	107.5	115.0	122.5	132.5	140.0	150.0	160.0	9.75	12.50	1.28	14.53	17.88	23.01	32.42	12.88	15.71	19.94	27.09
1.0	1.0	1.1	1.1	1.1	1.1	1.1	1.1	1.1	1.1	1.1	1.1	1.1	1.2	1.2											

* = Diameters below RMA minimum for other than Cog-Belt V-belts. Use with Super Power-Wedge V-belts will result in reduced life and loss of efficiency.

⚠ **WARNING** ** = Sheave Rim Speed in excess of 6500 feet per minute - see Page 236

Arc-Length Correction Factors are located beneath Center Distance Values

POWER-WEDGE PRE-ENGINEERED DRIVE SELECTION TABLES

5V/5VX PRE-ENGINEERED TABLES RATIO 1.29 - 1.38

Driven Speed for Motor Speed of				Sheave Outside Diameters			V-Belt Number and Center Distance (other sizes may be available, see page 214)																			
							5VX 500	5VX 530	5VX 560	5VX 600	5VX 630	5VX 670	5VX 710	5VX 750	5VX 800	5VX 850	5VX 900	5VX 950	5VX 1000	5VX 1060	5VX 1120	5VX 1180	5VX 1250	5VX 1320	5VX 1400	5VX 1500
690 RPM	870 RPM	1160 RPM	1750 RPM	Small Sheave	Large Sheave	Speed Ratio	—	—	12.7	14.7	16.2	18.2	20.2	22.2	24.7	27.2	29.7	32.2	34.7	37.7	40.7	43.7	47.2	50.7	54.8	59.8
537	677	902	1361	8.50	10.90	1.29	—	—	0.8	0.9	0.9	0.9	0.9	0.9	0.9	0.9	0.9	0.9	1.0	1.0	1.0	1.0	1.0	1.0	1.0	1.0
							—	—	—	—	—	—	15.9	17.9	20.4	22.9	25.4	27.9	30.4	33.4	36.4	39.4	42.9	46.4	50.4	55.4
536	676	901	1360	10.90	14.00	1.29	—	—	—	—	—	—	0.9	0.9	0.9	0.9	0.9	0.9	1.0	1.0	1.0	1.0	1.0	1.0	1.0	1.0
							—	12.1	13.6	15.6	17.1	19.1	21.1	23.1	25.6	28.1	30.6	33.1	35.6	38.6	41.6	44.6	48.1	51.6	55.6	60.6
534	674	898	1355	8.00	10.30	1.29	—	0.8	0.8	0.9	0.9	0.9	0.9	0.9	0.9	0.9	0.9	0.9	1.0	1.0	1.0	1.0	1.0	1.0	1.0	1.0
							16.2	17.7	19.2	21.2	22.7	24.7	26.7	28.7	31.2	33.7	36.2	38.7	41.2	44.2	47.2	50.2	53.7	57.2	61.2	66.2
534	674	898	1355 *	4.90 *	6.30	1.29	0.8	0.9	0.9	0.9	0.9	0.9	0.9	0.9	0.9	0.9	0.9	1.0	1.0	1.0	1.0	1.0	1.0	1.0	1.0	1.0
							15.6	17.1	18.6	20.6	22.1	24.1	26.1	28.1	30.6	33.1	35.6	38.1	40.6	43.6	46.6	49.6	53.1	56.6	60.6	65.6
533	672	896	1352 *	5.20 *	6.70	1.29	0.8	0.9	0.9	0.9	0.9	0.9	0.9	0.9	0.9	0.9	0.9	1.0	1.0	1.0	1.0	1.0	1.0	1.0	1.0	1.0
							15.1	16.6	18.1	20.1	21.6	23.6	25.6	27.6	30.1	32.6	35.1	37.6	40.1	43.1	46.1	49.1	52.6	56.1	60.1	65.1
532	671	895	1350 *	5.50 *	7.10	1.30	0.8	0.8	0.9	0.9	0.9	0.9	0.9	0.9	0.9	0.9	0.9	1.0	1.0	1.0	1.0	1.0	1.0	1.0	1.0	1.0
							11.4	12.9	14.4	16.4	17.9	19.9	21.9	23.9	26.4	28.9	31.4	33.9	36.4	39.4	42.4	45.4	48.9	52.4	56.4	61.4
529	667	890	1342	7.50	9.75	1.30	0.8	0.8	0.9	0.9	0.9	0.9	0.9	0.9	0.9	0.9	0.9	0.9	1.0	1.0	1.0	1.0	1.0	1.0	1.0	1.0
							12.1	13.6	15.1	17.1	18.6	20.6	22.6	24.6	27.1	29.6	32.1	34.6	37.1	40.1	43.1	46.1	49.6	53.1	57.1	62.1
528	666	887	1339	7.10	9.25	1.31	0.8	0.8	0.9	0.9	0.9	0.9	0.9	0.9	0.9	0.9	0.9	0.9	1.0	1.0	1.0	1.0	1.0	1.0	1.0	1.0
							—	—	—	13.6	15.7	17.1	19.1	21.1	23.6	26.1	28.6	31.1	33.6	36.6	39.6	42.6	46.1	49.6	53.6	58.6
525	662	882	1331	9.00	11.80	1.31	—	—	—	0.9	0.9	0.9	0.9	0.9	0.9	0.9	0.9	0.9	1.0	1.0	1.0	1.0	1.0	1.0	1.0	1.0
							—	—	—	—	—	—	—	—	—	—	—	—	20.6	23.6	26.6	29.6	33.2	36.7	40.7	45.7
520	656	874	1319	16.00	21.20	1.33	—	—	—	—	—	—	—	—	—	—	—	—	0.9	0.9	1.0	1.0	1.0	1.0	1.0	1.0
							—	—	—	—	—	—	14.7	16.7	19.3	21.8	24.3	26.8	29.3	32.3	35.3	38.3	41.8	45.3	49.3	54.3
519	654	872	1315	11.30	15.00	1.33	—	—	—	—	—	—	0.9	0.9	0.9	0.9	0.9	0.9	0.9	1.0	1.0	1.0	1.0	1.0	1.0	1.0
							—	—	12.4	14.4	15.9	17.9	19.9	21.9	24.4	26.9	29.4	31.9	34.4	37.4	40.4	43.4	46.9	50.4	54.4	59.4
518	653	870	1313	8.50	11.30	1.33	—	—	0.8	0.9	0.9	0.9	0.9	0.9	0.9	0.9	0.9	0.9	1.0	1.0	1.0	1.0	1.0	1.0	1.0	1.0
							12.6	14.1	15.6	17.6	19.1	21.1	23.1	25.1	27.6	30.1	32.6	35.2	37.7	40.7	43.7	46.7	50.2	53.7	57.7	62.7
512	645	860	1298 *	6.70 *	9.00	1.35	0.8	0.8	0.9	0.9	0.9	0.9	0.9	0.9	0.9	0.9	0.9	0.9	1.0	1.0	1.0	1.0	1.0	1.0	1.0	1.0
							16.9	18.4	19.9	21.9	23.4	25.4	27.4	29.4	31.9	34.4	36.9	39.4	41.9	44.9	47.9	50.9	54.4	57.9	61.9	66.9
512	645	860	1298 *	4.40 *	5.90	1.35	0.8	0.9	0.9	0.9	0.9	0.9	0.9	0.9	0.9	0.9	0.9	1.0	1.0	1.0	1.0	1.0	1.0	1.0	1.0	1.0
							13.3	14.8	16.3	18.3	19.8	21.8	23.9	25.9	28.4	30.9	33.4	35.9	38.4	41.4	44.4	47.4	50.9	54.4	58.4	63.4
509	642	856	1292 *	6.30 *	8.50	1.35	0.8	0.8	0.9	0.9	0.9	0.9	0.9	0.9	0.9	0.9	0.9	0.9	1.0	1.0	1.0	1.0	1.0	1.0	1.0	1.0
							—	—	—	12.8	14.3	16.3	18.3	20.4	22.9	25.4	27.9	30.4	32.9	35.9	38.9	41.9	45.4	48.9	52.9	57.9
509	642	856	1291	9.25	12.50	1.36	—	—	—	0.9	0.9	0.9	0.9	0.9	0.9	0.9	0.9	0.9	1.0	1.0	1.0	1.0	1.0	1.0	1.0	1.0
							—	—	—	-0.0	13.4	15.4	17.4	19.4	21.9	24.4	26.9	29.4	31.9	34.9	37.9	40.9	44.4	47.9	51.9	56.9
508	640	854	1289	9.75	13.20	1.36	—	—	—	—	0.9	0.9	0.9	0.9	0.9	0.9	0.9	0.9	1.0	1.0	1.0	1.0	1.0	1.0	1.0	1.0
							—	—	—	—	—	—	—	15.5	18.0	20.6	23.1	25.6	28.1	31.1	34.1	37.1	40.6	44.1	48.1	53.1
508	640	854	1288	11.80	16.00	1.36	—	—	—	—	—	—	—	0.9	0.9	0.9	0.9	0.9	0.9	1.0	1.0	1.0	1.0	1.0	1.0	1.0
							14.0	15.5	17.1	19.1	20.6	22.6	24.6	26.6	29.1	31.6	34.1	36.6	39.1	42.1	45.1	48.1	51.6	55.1	59.1	64.1
507	639	852	1285 *	5.90 *	8.00	1.36	0.8	0.8	0.9	0.9	0.9	0.9	0.9	0.9	0.9	0.9	0.9	0.9	1.0	1.0	1.0	1.0	1.0	1.0	1.0	1.0
							16.4	17.9	19.4	21.4	22.9	24.9	26.9	28.9	31.4	33.9	36.4	38.9	41.4	44.4	47.4	50.4	53.9	57.4	61.4	55.4
506	638	851	1284 *	4.65 *	6.30	1.36	0.8	0.9	0.9	0.9	0.9	0.9	0.9	0.9	0.9	0.9	0.9	1.0	1.0	1.0	1.0	1.0	1.0	1.0	1.0	1.0
							—	—	—	—	—	14.3	16.3	18.3	20.8	23.3	25.8	28.4	30.9	33.9	36.9	39.9	43.4	46.9	50.9	55.9
506	638	851	1284	10.30	14.00	1.36	—	—	—	—	—	0.9	0.9	0.9	0.9	0.9	0.9	0.9	0.9	1.0	1.0	1.0	1.0	1.0	1.0	1.0
							—	—	—	—	—	14.3	16.3	18.3	20.8	23.3	25.8	28.4	30.9	33.9	36.9	39.9	43.4	46.9	50.9	55.9
506	638	851	1284	10.30	14.00	1.36	—	—	—	—	—	0.9	0.9	0.9	0.9	0.9	0.9	0.9	0.9	1.0	1.0	1.0	1.0	1.0	1.0	1.0
							—	11.6	13.1	15.1	16.6	18.6	20.6	22.6	25.1	27.6	30.1	32.6	35.1	38.1	41.1	44.1	47.6	51.1	55.1	60.1
505	636	849	1280	8.00	10.90	1.37	—	0.8	0.8	0.9	0.9	0.9	0.9	0.9	0.9	0.9	0.9	0.9	1.0	1.0	1.0	1.0	1.0	1.0	1.0	1.0
							14.8	16.3	17.8	19.8	21.3	23.3	25.3	27.3	29.8	32.3	34.8	37.3	39.8	42.8	45.8	48.8	52.3	55.8	59.8	64.8
504	635	846	1277 *	5.50 *	7.50	1.37	0.8	0.8	0.9	0.9	0.9	0.9	0.9	0.9	0.9	0.9	0.9	0.9	1.0	1.0	1.0	1.0	1.0	1.0	1.0	1.0
							15.3	16.8	18.3	20.3	21.8	23.8	25.8	27.8	30.3	32.8	35.3	37.8	40.3	43.3	46.3	49.3	52.8	56.3	60.3	65.3
503	634	845	1275 *	5.20 *	7.10	1.37	0.8	0.8	0.9	0.9	0.9	0.9	0.9	0.9	0.9	0.9	0.9	0.9	1.0	1.0	1.0	1.0	1.0	1.0	1.0	1.0
							15.9	17.4	18.9	20.9	22.4	24.4	26.4	28.4	30.9	33.4	35.9	38.4	40.9	43.9	46.9	49.9	53.4	56.9	60.9	65.9
502	633	844	1273 *	4.90 *	6.70	1.38	0.8	0.8	0.9	0.9	0.9	0.9	0.9	0.9	0.9	0.9	0.9	0.9	1.0	1.0	1.0	1.0	1.0	1.0	1.0	1.0
							10.9	12.4	13.9	16.0	17.5	19.5	21.5	23.5	26.0	28.5	31.0	33.5	36.0	39.0	42.0	45.0	48.5	52.0	56.0	61.0
501	631	842	1270	7.50	10.30	1.38	0.8	0.8	0.8	0.9	0.9	0.9	0.9	0.9	0.9	0.9	0.9	0.9	1.0	1.0	1.0	1.0	1.0	1.0	1.0	1.0
							11.7	13.2	14.7	16.7	18.2	20.2	22.2	24.2	26.7	29.2	31.7	34.2	36.7	39.7	42.7	45.7	49.2	52.7	56.8	61.8
501	631	841	1269	7.10	9.75	1.38	0.8	0.8	0.8	0.9	0.9	0.9	0.9	0.9	0.9	0.9	0.9	0.9	1.0	1.0	1.0	1.0	1.0	1.0	1.0	1.0
							—	—	—	—	—	—	15.0	17.0	19.6	22.1	24.6	27.1	29.6	32.6	35.6	38.6	42.1	45.6	49.6	54.6
500	631	841	1268	10.90	15.00	1.38	—	—	—	—	—	—	0.9	0.9	0.9	0.9	0.9	0.9	0.9	1.0	1.0	1.0	1.0	1.0	1.0	1.0

* = Diameters below RMA minimum for other than Cog-Belt V-belts. Use with Super Power-Wedge V-belts will result in reduced life and loss of efficiency.

⚠ **WARNING** ** = Sheave Rim Speed in excess of 6500 feet per minute - see Page 236

Arc-Length Correction Factors are located beneath Center Distance Values

POWER-WEDGE PRE-ENGINEERED DRIVE SELECTION TABLES

5V/5VX PRE-ENGINEERED TABLES RATIO 1.29 - 1.38

V-Belt Number and Center Distance (Other sizes may be available, see page 214)																		Rated HP per Belt (Includes Added HP for Speed Ratio) Power-Wedge Cog-Belt (5VX) RPM of Small Sheave				Rated HP per Belt (Includes Added HP for Speed Ratio) Super Power-Wedge Belt (5V) RPM of Small Sheave			
5VX 1600	5VX 1700	5VX 1800	5VX 1900	5VX 2000	5V 2120	5V 2240	5V 2360	5V 2500	5V 2650	5V 2800	5V 3000	5V 3150	5V 3350	5V 3550	Small Sheave	Large Sheave	Speed Ratio	690 RPM	870 RPM	1160 RPM	1750 RPM	690 RPM	870 RPM	1160 RPM	1170 RPM
64.8	69.8	74.8	79.8	84.8	90.8	96.8	102.8	109.8	117.3	124.8	134.8	142.3	152.3	162.3	8.50	10.90	1.29	12.18	14.98	19.30	27.33	10.57	12.90	16.40	22.47
1.0	1.0	1.1	1.1	1.1	1.1	1.1	1.1	1.1	1.1	1.1	1.1	1.1	1.2	1.2											
60.4	65.4	70.4	75.4	80.4	86.4	92.4	98.4	105.4	112.9	120.4	130.4	137.9	147.9	157.9	10.90	14.00	1.29	16.67	20.50	26.34	36.89	14.96	18.25	23.10	31.05
1.0	1.0	1.1	1.1	1.1	1.1	1.1	1.1	1.1	1.1	1.1	1.1	1.1	1.2	1.2											
65.6	70.6	75.6	80.6	85.6	91.6	97.6	103.6	110.6	118.1	125.6	135.6	143.1	153.1	163.1	8.00	10.30	1.29	11.23	13.81	17.80	25.24	9.64	11.76	14.95	20.53
1.0	1.0	1.1	1.1	1.1	1.1	1.1	1.1	1.1	1.1	1.1	1.1	1.1	1.2	1.2											
71.2	76.2	81.2	86.2	91.2	—	—	—	—	—	—	—	—	—	—	4.90	6.30	1.29	5.20	6.36	8.16	11.53	*	*	*	*
1.0	1.0	1.1	1.1	1.1	—	—	—	—	—	—	—	—	—	—	*	*									
70.6	75.7	80.7	75.7	90.7	—	—	—	—	—	—	—	—	—	—	5.20	6.70	1.29	5.79	7.10	9.11	12.91	*	*	*	*
1.0	1.0	1.1	1.1	1.1	—	—	—	—	—	—	—	—	—	—	*	*									
70.1	75.1	80.1	85.1	90.1	—	—	—	—	—	—	—	—	—	—	5.50	7.10	1.30	6.39	7.83	10.07	14.28	*	*	*	*
1.0	1.0	1.1	1.1	1.1	—	—	—	—	—	—	—	—	—	—	*	*									
66.4	71.4	76.4	81.4	86.4	92.4	98.4	104.4	111.4	118.9	126.4	136.4	143.9	153.9	163.9	7.50	9.75	1.30	10.27	12.63	16.28	23.11	8.70	10.61	13.48	18.54
1.0	1.0	1.1	1.1	1.1	1.1	1.1	1.1	1.1	1.1	1.1	1.1	1.1	1.2	1.2											
67.2	72.2	77.2	82.2	87.2	93.2	99.2	105.2	112.2	119.7	127.2	137.2	144.7	154.7	164.7	7.10	9.25	1.31	9.50	11.68	15.05	21.39	7.94	9.68	12.29	16.92
1.0	1.0	1.1	1.1	1.1	1.1	1.1	1.1	1.1	1.1	1.1	1.1	1.1	1.2	1.2											
63.6	68.6	73.7	78.7	83.7	89.7	95.7	101.7	108.7	116.2	123.7	133.7	141.2	151.2	161.2	9.00	11.80	1.31	13.12	16.15	20.79	29.39	11.50	14.03	17.83	24.36
1.0	1.0	1.1	1.1	1.1	1.1	1.1	1.1	1.1	1.1	1.1	1.1	1.1	1.2	1.2											
50.7	55.7	60.7	65.7	70.7	76.7	82.7	88.7	95.7	103.3	110.8	120.8	128.3	138.3	148.3	16.00	21.20	1.33	25.84	31.61	40.15	**	23.81	28.79	35.71	**
1.0	1.0	1.1	1.1	1.1	1.1	1.1	1.1	1.1	1.1	1.1	1.1	1.1	1.2	1.2											
59.3	64.3	69.3	74.3	79.3	85.3	91.3	97.3	104.3	111.8	119.3	129.3	136.8	146.8	156.8	11.30	15.00	1.33	17.41	21.40	27.48	38.40	15.68	19.11	24.17	32.35
1.0	1.0	1.1	1.1	1.1	1.1	1.1	1.1	1.1	1.1	1.1	1.1	1.1	1.2	1.2											
64.4	69.4	74.4	79.4	84.4	90.4	96.4	102.4	109.4	116.9	124.4	134.4	141.9	151.9	161.9	8.50	11.30	1.33	12.18	14.98	19.30	27.33	10.57	12.90	16.40	22.47
1.0	1.0	1.1	1.1	1.1	1.1	1.1	1.1	1.1	1.1	1.1	1.1	1.1	1.2	1.2											
67.7	72.7	77.7	82.7	87.7	—	—	—	—	—	—	—	—	—	-0.0	6.70	9.00	1.35	8.73	10.73	13.82	19.64	*	*	*	*
1.0	1.0	1.1	1.1	1.1	—	—	—	—	—	—	—	—	—		*	*									
71.9	76.9	81.9	86.9	91.9	—	—	—	—	—	—	—	—	—	-0.0	4.40	5.90	1.35	4.20	5.13	6.55	9.21	*	*	*	*
1.0	1.0	1.1	1.1	1.1	—	—	—	—	—	—	—	—	—		*	*									
68.4	73.4	78.4	83.4	88.4	—	—	—	—	—	—	—	—	—	-0.0	6.30	8.50	1.35	7.95	9.77	12.58	17.88	*	*	*	*
1.0	1.0	1.1	1.1	1.1	—	—	—	—	—	—	—	—	—		*	*									
62.9	67.9	72.9	77.9	82.9	88.9	94.9	100.9	107.9	115.4	122.9	132.9	140.4	150.4	160.4	9.25	12.50	1.36	13.65	16.80	21.63	30.55	11.96	14.60	18.54	25.28
1.0	1.0	1.1	1.1	1.1	1.1	1.1	1.1	1.1	1.1	1.1	1.1	1.1	1.2	1.2											
62.0	67.0	72.0	77.0	82.0	88.0	94.0	100.0	107.0	114.5	122.0	132.0	139.5	149.5	159.5	9.75	13.20	1.36	14.59	17.95	23.10	32.56	12.88	15.71	19.94	27.09
1.0	1.0	1.1	1.1	1.1	1.1	1.1	1.1	1.1	1.1	1.1	1.1	1.1	1.2	1.2											
58.1	63.1	68.1	73.1	78.1	84.1	90.1	96.1	103.1	110.6	118.1	128.1	135.6	145.7	155.7	11.80	16.00	1.36	18.38	22.59	28.98	40.39	16.57	20.19	25.49	33.92
1.0	1.0	1.1	1.1	1.1	1.1	1.1	1.1	1.1	1.1	1.1	1.1	1.1	1.2	1.2											
69.1	74.1	79.1	84.1	89.1	—	—	—	—	—	—	—	—	—	—	5.90	8.00	1.36	7.23	8.87	11.42	16.23	*	*	*	*
1.0	1.0	1.1	1.1	1.1	—	—	—	—	—	—	—	—	—	—	*	*									
71.4	76.4	81.4	86.4	91.4	—	—	—	—	—	—	—	—	—	—	4.65	6.30	1.36	4.76	5.82	7.45	10.52	*	*	*	*
1.0	1.0	1.1	1.1	1.1	—	—	—	—	—	—	—	—	—	—	*	*									
60.9	65.9	70.9	75.9	80.9	86.9	92.9	98.9	105.9	113.4	120.9	130.9	138.4	148.4	158.4	10.30	14.00	1.36	15.61	19.20	24.70	34.72	13.88	16.93	21.46	29.02
1.0	1.0	1.1	1.1	1.1	1.1	1.1	1.1	1.1	1.1	1.1	1.1	1.1	1.2	1.2											
60.9	65.9	70.9	75.9	80.9	86.9	92.9	98.9	105.9	113.4	120.9	130.9	138.4	148.4	158.4	10.30	14.00	1.36	15.61	19.20	24.70	34.72	13.88	16.93	21.46	29.02
1.0	1.0	1.1	1.1	1.1	1.1	1.1	1.1	1.1	1.1	1.1	1.1	1.1	1.2	1.2											
65.1	70.1	75.1	80.1	85.1	91.1	97.1	103.1	110.1	117.6	125.1	135.1	142.6	152.6	162.6	8.00	10.90	1.37	11.28	13.88	17.89	25.38	9.64	11.76	14.95	20.53
1.0	1.0	1.1	1.1	1.1	1.1	1.1	1.1	1.1	1.1	1.1	1.1	1.1	1.2	1.2											
69.8	74.8	79.8	84.8	89.8	—	—	—	—	—	—	—	—	—	—	5.50	7.50	1.37	6.44	7.90	10.16	14.42	*	*	*	*
1.0	1.0	1.1	1.1	1.1	—	—	—	—	—	—	—	—	—	—	*	*									
70.3	75.3	80.3	85.3	90.3	—	—	—	—	—	—	—	—	—	—	5.20	7.10	1.37	5.85	7.17	9.21	13.05	*	*	*	*
1.0	1.0	1.1	1.1	1.1	—	—	—	—	—	—	—	—	—	—	*	*									
70.9	75.9	80.9	85.9	90.9	—	—	—	—	—	—	—	—	—	—	4.90	6.70	1.38	5.26	6.43	8.25	11.67	*	*	*	*
1.0	1.0	1.1	1.1	1.1	—	—	—	—	—	—	—	—	—	—	*	*									
66.0	71.0	76.0	81.0	86.0	92.0	98.0	104.0	111.0	118.5	126.0	136.0	143.5	153.5	163.5	7.50	10.30	1.38	10.33	12.70	16.37	23.25	8.70	10.61	13.48	18.54
1.0	1.0	1.1	1.1	1.1	1.1	1.1	1.1	1.1	1.1	1.1	1.1	1.1	1.2	1.2											
66.8	71.8	76.8	81.8	86.8	92.8	98.8	104.8	111.8	119.3	126.8	136.8	144.3	154.3	164.3	7.10	9.75	1.38	9.56	11.75	15.15	21.53	7.94	9.68	12.29	16.92
1.0	1.0	1.1	1.1	1.1	1.1	1.1	1.1	1.1	1.1	1.1	1.1	1.1	1.2	1.2											
59.6	64.6	69.6	74.6	79.6	85.6	91.6	97.6	104.6	112.1	119.6	129.6	137.1	147.1	157.1	10.90	15.00	1.38	16.72	20.57	26.43	37.03	14.96	18.25	23.10	31.05
1.0	1.0	1.1	1.1	1.1	1.1	1.1	1.1	1.1	1.1	1.1	1.1	1.1	1.2	1.2											

* = Diameters below RMA minimum for other than Cog-Belt V-belts. Use with Super Power-Wedge V-belts will result in reduced life and loss of efficiency.

⚠ **WARNING**** = Sheave Rim Speed in excess of 6500 feet per minute - see Page 236

Arc-Length Correction Factors are located beneath Center Distance Values

POWER-WEDGE PRE-ENGINEERED DRIVE SELECTION TABLES

5V/5VX PRE-ENGINEERED TABLES RATIO 1.39 - 1.50

Driven Speed for Motor Speed of				Sheave Outside Diameters		V-Belt Number and Center Distance (other sizes may be available, see page 214)																					
690 RPM	870 RPM	1160 RPM	1750 RPM	Small Sheave	Large Sheave	Speed Ratio	5VX 500	5VX 530	5VX 560	5VX 600	5VX 630	5VX 670	5VX 710	5VX 750	5VX 800	5VX 850	5VX 900	5VX 950	5VX 1000	5VX 1060	5VX 1120	5VX 1180	5VX 1250	5VX 1320	5VX 1400	5VX 1500
498	628	837	1262	6.70	9.25	1.39	12.4	13.9	15.4	17.4	18.9	20.9	22.9	24.9	27.4	29.9	32.4	34.9	37.5	40.5	43.5	56.5	50.0	53.5	57.5	62.5
			*	*			0.8	0.8	0.9	0.9	0.9	0.9	0.9	0.9	0.9	0.9	0.9	0.9	1.0	1.0	1.0	1.0	1.0	1.0	1.0	1.0
495	625	833	1256	8.50	11.80	1.39	—	—	11.9	14.0	15.5	17.5	19.5	21.5	24.0	26.5	29.0	31.5	34.0	37.0	40.0	43.0	46.5	50.0	54.0	59.0
							—	—		0.8	0.9	0.9	0.9	0.9	0.9	0.9	0.9	0.9	1.0	1.0	1.0	1.0	1.0	1.0	1.0	1.0
495	624	833	1256	9.00	12.50	1.39	—	—	—	13.0	14.5	16.5	18.5	20.5	23.0	25.6	28.1	30.6	33.1	36.1	39.1	42.1	45.6	49.1	53.1	58.1
							—	—	—	0.8	0.9	0.9	0.9	0.9	0.9	0.9	0.9	0.9	1.0	1.0	1.0	1.0	1.0	1.0	1.0	1.0
487	614	819	1236	15.00	21.20	1.42	—	—	—	—	—	—	—	—	—	—	—	—	21.3	24.4	27.4	30.4	33.9	37.4	41.5	46.5
							—	—	—	—	—	—	——	—	—	—	—	—	0.9	0.9	1.0	1.0	1.0	1.0	1.0	1.0
487	614	818	1234	8.00	11.30	1.42	—	11.2	12.7	14.7	16.3	18.3	20.3	22.3	24.8	27.3	29.8	32.3	34.8	37.8	40.8	43.8	47.3	50.8	54.8	59.8
							—	0.8	0.8	0.9	0.9	0.9	0.9	0.9	0.9	0.9	0.9	0.9	1.0	1.0	1.0	1.0	1.0	1.0	1.0	1.0
486	613	817	1233	11.30	16.00	1.42	—	—	—	—	—	—	—	15.9	18.4	20.9	23.4	26.0	28.5	31.5	34.5	37.5	41.0	44.5	48.5	53.5
							—	—	—	—	—	—	—	0.9	0.9	0.9	0.9	0.9	0.9	1.0	1.0	1.0	1.0	1.0	1.0	1.0
486	613	817	1233	13.20	18.70	1.42	—	—	—	—	—	—	—	—	—	—	19.8	22.3	24.8	27.8	30.8	33.8	37.3	40.9	44.9	49.9
							—	—	—	—	—	—	—	—	—	—	0.9	0.9	0.9	0.9	1.0	1.0	1.0	1.0	1.0	1.0
482	608	810	1222	9.25	13.20	1.43	—	—	—	—	13.7	15.7	17.8	19.8	22.3	24.8	27.3	29.8	32.3	35.3	38.3	41.3	44.8	48.3	52.3	57.3
							—	—	—	—	0.9	0.9	0.9	0.9	0.9	0.9	0.9	0.9	0.9	1.0	1.0	1.0	1.0	1.0	1.0	1.0
481	606	808	1219	6.30	9.00	1.44	12.9	14.4	15.9	17.9	19.4	21.4	23.4	25.4	28.0	30.5	33.0	35.5	38.0	41.0	44.0	47.0	50.5	54.0	58.0	63.0
			*	*			0.8	0.8	0.8	0.9	0.9	0.9	0.9	0.9	0.9	0.9	0.9	0.9	1.0	1.0	1.0	1.0	1.0	1.0	1.0	1.0
479	604	805	1215	9.75	14.00	1.44	—	—	—	—	—	14.7	16.7	18.7	21.2	23.8	26.3	28.8	31.3	34.3	37.3	40.3	43.8	47.3	51.3	56.3
							—	—	—	—	—	0.9	0.9	0.9	0.9	0.9	0.9	0.9	0.9	1.0	1.0	1.0	1.0	1.0	1.0	1.0
479	603	805	1214	4.40	6.30	1.44	16.6	18.1	19.6	21.6	23.1	25.1	27.1	29.1	31.6	34.1	36.6	39.1	41.6	44.6	47.6	50.6	54.1	57.6	61.6	66.6
			*	*			0.8	0.8	0.9	0.9	0.9	0.9	0.9	0.9	0.9	0.9	0.9	0.9	1.0	1.0	1.0	1.0	1.0	1.0	1.0	1.0
476	601	801	1208	5.90	8.50	1.45	13.6	15.1	16.6	18.6	20.1	232.2	24.2	26.2	28.7	31.2	33.7	36.2	38.7	41.7	44.7	47.7	51.2	54.7	58.7	63.7
			*	*			0.8	0.8	0.9	0.9	0.9	0.9	0.9	0.9	0.9	0.9	0.9	0.9	1.0	1.0	1.0	1.0	1.0	1.0	1.0	1.0
476	600	800	1206	4.65	6.70	1.45	16.1	17.6	19.1	21.1	22.6	24.6	26.6	28.6	31.1	33.6	38.1	38.6	41.1	44.4	47.1	50.1	53.6	57.1	61.1	66.1
			*	*			0.8	0.8	0.9	0.9	0.9	0.9	0.9	0.9	0.9	0.9	0.9	0.9	1.0	1.0	1.0	1.0	1.0	1.0	1.0	1.0
476	600	799	1206	5.20	7.50	1.45	15.0	16.5	18.0	20.0	21.5	23.5	25.5	27.5	30.0	32.5	35.0	37.5	40.0	43.0	46.0	49.0	52.5	56.0	60.0	65.0
			*	*			0.8	0.8	0.9	0.9	0.9	0.9	0.9	0.9	0.9	0.9	0.9	0.9	1.0	1.0	1.0	1.0	1.0	1.0	1.0	1.0
474	597	796	1201	7.10	10.30	1.46	11.2	12.7	14.2	16.3	17.8	19.8	21.8	23.8	26.3	28.8	31.3	33.8	36.3	39.3	42.3	45.3	48.8	52.3	56.3	61.3
							0.8	0.8	0.9	0.9	0.9	0.9	0.9	0.9	0.9	0.9	0.9	0.9	1.0	1.0	1.0	1.0	1.0	1.0	1.0	1.0
473	597	795	1200	4.90	7.10	1.46	15.5	17.0	18.5	20.5	22.0	24.1	26.1	28.1	30.6	33.1	35.6	38.1	40.6	43.6	46.6	49.6	53.1	56.6	60.6	65.6
			*	*			0.8	0.8	0.9	0.9	0.9	0.9	0.9	0.9	0.9	0.9	0.9	0.9	1.0	1.0	1.0	1.0	1.0	1.0	1.0	1.0
473	596	795	1199	7.50	10.90	1.46	—	11.9	13.4	15.5	17.0	19.0	21.0	23.0	25.5	28.0	30.5	33.0	35.5	38.5	41.5	44.5	48.0	51.5	55.5	60.5
							—	0.8	0.9	0.9	0.9	0.9	0.9	0.9	0.9	0.9	0.9	0.9	1.0	1.0	1.0	1.0	1.0	1.0	1.0	1.0
472	596	794	1198	10.30	15.00	1.46	—	—	—	—	—	—	15.5	17.5	20.0	22.5	25.0	27.5	30.0	33.0	36.1	39.1	42.6	46.1	50.1	55.1
							—	—	—	—	—	—	0.9	0.9	0.9	0.9	0.9	0.9	0.9	1.0	1.0	1.0	1.0	1.0	1.0	1.0
472	595	793	1197	6.70	9.75	1.46	12.0	13.5	15.0	17.0	18.5	20.5	22.5	24.5	27.0	29.5	32.0	34.5	37.0	40.1	43.1	46.1	49.6	53.1	57.1	62.1
			*	*			0.8	0.8	0.9	0.9	0.9	0.9	0.9	0.9	0.9	0.9	0.9	0.9	1.0	1.0	1.0	1.0	1.0	1.0	1.0	1.0
472	595	793	1196	5.50	8.00	1.46	14.3	15.8	17.4	19.4	20.9	22.9	24.9	26.9	29.4	31.9	34.4	36.9	39.4	42.4	45.4	48.4	51.9	55.4	59.4	64.4
			*	*			0.8	0.8	0.9	0.9	0.9	0.9	0.9	0.9	0.9	0.9	0.9	0.9	1.0	1.0	1.0	1.0	1.0	1.0	1.0	1.0
469	591	788	1189	9.00	13.20	1.47	—	—	—	—	13.9	15.9	17.9	20.0	22.5	25.0	27.5	30.0	32.5	35.5	38.5	41.5	45.0	48.5	52.5	57.5
							—	—	—	—	0.9	0.9	0.9	0.9	0.9	0.9	0.9	0.9	0.9	1.0	1.0	1.0	1.0	1.0	1.0	1.0
469	591	788	1189	10.90	16.00	1.47	—	—	—	—	—	—	—	16.2	18.7	21.2	23.7	26.2	28.8	31.8	34.8	37.8	41.3	44.8	48.8	53.8
							—	—	—	—	—	—	—	0.9	0.9	0.9	0.9	0.9	0.9	1.0	1.0	1.0	1.0	1.0	1.0	1.0
468	590	786	1186	6.30	9.25	1.48	12.7	14.2	15.7	17.7	19.2	21.2	23.2	25.2	27.7	30.3	32.8	35.3	37.8	40.8	43.8	46.8	50.3	53.8	57.8	62.8
			*	*			0.8	0.8	0.9	0.9	0.9	0.9	0.9	0.9	0.9	0.9	0.9	0.9	1.0	1.0	1.0	1.0	1.0	1.0	1.0	1.0
467	589	786	1185	8.50	12.50	1.48	—	—	—	13.4	14.9	16.9	18.9	20.9	23.4	25.9	28.4	30.9	33.4	36.5	39.5	42.5	46.0	49.5	53.5	58.5
							—	—	—	0.8	0.9	0.9	0.9	0.9	0.9	0.9	0.9	0.9	0.9	1.0	1.0	1.0	1.0	1.0	1.0	1.0
467	589	785	1184	16.00	23.60	1.48	—	—	—	—	—	—	—	—	—	—	—	—	—	21.6	24.6	27.6	31.2	34.7	38.7	43.7
							—	—	—	—	—	—	—	—	—	—	—	—	—	0.9	0.9	1.0	1.0	1.0	1.0	1.0
466	587	783	1182	8.00	11.80	1.48	—	—	12.3	14.3	15.8	17.8	19.9	21.9	24.4	26.9	29.4	31.9	34.4	37.4	40.4	43.4	46.9	50.4	54.4	59.4
							—	—	0.8	0.8	0.9	0.9	0.9	0.9	0.9	0.9	0.9	0.9	0.9	1.0	1.0	1.0	1.0	1.0	1.0	1.0
460	580	773	1167	12.50	18.70	1.50	—	—	—	—	—	—	—	—	—	17.7	20.3	22.8	25.3	28.3	31.3	34.4	37.9	41.4	45.4	50.4
							—	—	—	—	—	—	—	—	—	0.9	0.9	0.9	0.9	0.9	1.0	1.0	1.0	1.0	1.0	1.0

* = Diameters below RMA minimum for other than Cog-Belt V-belts. Use with Super Power-Wedge V-belts will result in reduced life and loss of efficiency.

⚠ **WARNING**** = Sheave Rim Speed in excess of 6500 feet per minute - see Page 236

Arc-Length Correction Factors are located beneath Center Distance Values

POWER-WEDGE PRE-ENGINEERED DRIVE SELECTION TABLES

5V/5VX PRE-ENGINEERED TABLES — RATIO 1.39 - 1.50

V-Belt Number and Center Distance (Other sizes may be available, see page 214)																		Rated HP per Belt (Includes Added HP for Speed Ratio) Power-Wedge Cog-Belt (5VX) RPM of Small Sheave				Rated HP per Belt (Includes Added HP for Speed Ratio) Super Power-Wedge Belt (5V) RPM of Small Sheave			
5VX 1600	5VX 1700	5VX 1800	5VX 1900	5VX 2000	5V 2120	5V 2240	5V 2360	5V 2500	5V 2650	5V 2800	5V 3000	5V 3150	5V 3350	5V 3550	Small Sheave	Large Sheave	Speed Ratio	690 RPM	870 RPM	1160 RPM	1750 RPM	690 RPM	870 RPM	1160 RPM	1170 RPM
67.5	72.5	77.5	82.5	87.5	—	—	—	—	—	—	—	—	—	—	6.70	9.25	1.39	8.78	10.80	13.91	19.78	*	*	*	*
1.0	1.0	1.1	1.1	1.1	—	—	—	—	—	—	—	—	—	—	*	*									
64.0	69.0	74.0	79.0	84.0	90.0	96.0	102.0	109.0	116.5	124.0	134.0	141.5	151.5	161.5	8.50	11.80	1.39	12.23	15.05	19.40	27.48	10.66	13.01	16.55	22.70
1.0	1.0	1.1	1.1	1.1	1.1	1.1	1.1	1.1	1.1	1.1	1.1	1.1	1.2	1.2											
63.1	68.1	73.1	78.1	83.1	89.1	95.1	101.1	108.1	115.6	123.1	133.1	140.6	150.6	160.6	9.00	12.50	1.39	13.18	16.22	20.89	29.53	11.59	14.15	17.98	24.59
1.0	1.0	1.1	1.1	1.1	1.1	1.1	1.1	1.1	1.1	1.1	1.1	1.1	1.2	1.2											
51.5	56.5	61.5	66.5	71.5	77.5	83.5	89.5	96.5	104.0	111.5	121.5	129.0	139.0	149.0	15.00	21.20	1.42	24.13	29.57	37.67	**	22.22	26.93	33.57	*
1.0	1.0	1.1	1.1	1.1	1.1	1.1	1.1	1.1	1.1	1.1	1.1	1.1	1.2	1.2											
64.8	69.8	74.8	79.8	84.8	90.8	96.8	102.8	109.8	117.3	124.8	134.8	142.3	152.3	162.3	8.00	11.30	1.42	11.28	13.88	17.89	25.38	9.73	11.87	15.10	20.76
1.0	1.0	1.1	1.1	1.1	1.1	1.1	1.1	1.1	1.1	1.1	1.1	1.1	1.2	1.2											
58.5	63.5	68.5	73.5	78.5	84.5	90.5	96.5	103.5	111.0	118.5	128.5	136.0	146.0	156.0	11.30	16.00	1.42	17.46	21.47	27.57	38.54	15.77	19.23	24.32	32.58
1.0	1.0	1.1	1.1	1.1	1.1	1.1	1.1	1.1	1.1	1.1	1.1	1.1	1.2	1.2											
54.9	59.9	64.9	69.9	74.9	80.9	86.9	92.9	99.9	107.4	114.9	124.9	132.4	142.4	152.4	13.20	18.70	1.42	20.92	25.68	32.86	45.34	19.12	23.26	29.22	38.22
1.0	1.0	1.1	1.1	1.1	1.1	1.1	1.1	1.1	1.1	1.1	1.1	1.1	1.2	1.2											
62.3	67.3	72.3	77.3	82.3	88.3	94.3	100.3	107.3	114.9	122.4	132.4	139.9	149.9	159.9	9.25	13.20	1.43	13.65	16.80	21.63	30.55	12.05	14.71	18.69	25.51
1.0	1.0	1.1	1.1	1.1	1.1	1.1	1.1	1.1	1.1	1.1	1.1	1.1	1.2	1.2											
68.0	73.0	78.0	83.0	88.0	—	—	—	—	—	—	—	—	—	—	6.30	9.00	1.44	8.01	9.84	12.67	18.02	*	*	*	*
1.0	1.0	1.1	1.1	1.1	—	—	—	—	—	—	—	—	—	—											
61.3	66.3	71.3	76.3	81.3	87.3	93.3	99.3	106.3	113.8	121.3	131.3	138.8	148.8	158.8	9.75	14.00	1.44	14.59	17.95	23.10	32.56	12.97	15.83	20.09	27.32
1.0	1.0	1.1	1.1	1.1	1.1	1.1	1.1	1.1	1.1	1.1	1.1	1.1	1.2	1.2											
71.6	76.6	81.6	86.6	91.6	—	—	—	—	—	—	—	—	—	—	4.0	6.30	1.44	4.26	5.20	6.64	9.35	*	*	*	*
1.0	1.0	1.1	1.1	1.1	—	—	—	—	—	—	—	—	—	—	*	*									
68.7	73.7	78.7	83.7	88.7	—	—	—	—	—	—	—	—	—	—	5.90	8.50	1.45	7.23	8.87	11.42	16.23	*	*	*	*
1.0	1.0	1.1	1.1	1.1	—	—	—	—	—	—	—	—	—	—	*	*									
71.1	76.1	81.1	86.1	91.1	—	—	—	—	—	—	—	—	—	—	4.65	6.70	1.45	4.76	5.82	7.45	10.52	*	*	*	*
1.0	1.0	1.1	1.1	1.1	—	—	—	—	—	—	—	—	—	—	*	*									
70.0	75.0	80.0	85.0	90.0	—	—	—	—	—	—	—	—	—	—	5.20	7.50	1.45	5.85	7.17	9.21	13.05	*	*	*	*
1.0	1.0	1.1	1.1	1.1	—	—	—	—	—	—	—	—	—	—	*	*									
66.3	71.3	76.3	81.3	86.3	92.3	98.3	104.3	111.3	118.8	126.3	136.3	143.8	153.8	163.8	7.10	10.30	1.46	9.56	11.75	15.15	21.53	8.03	9.79	12.44	17.15
1.0	1.0	1.1	1.1	1.1	1.1	1.1	1.1	1.1	1.1	1.1	1.1	1.1	1.2	1.2											
70.6	75.6	80.6	85.6	90.6	—	—	—	—	—	—	—	—	—	—	4.90	7.10	1.46	5.26	6.43	8.25	11.67	*	*	*	*
1.0	1.0	1.1	1.1	1.1	—	—	—	—	—	—	—	—	—	—	*	*									
65.5	70.5	75.5	80.5	85.5	91.5	97.5	103.5	110.5	118.0	125.5	135.5	143.0	153.0	163.0	7.50	10.90	1.46	10.33	12.70	16.37	23.25	8.79	10.72	13.63	18.77
1.0	1.0	1.1	1.1	1.1	1.1	1.1	1.1	1.1	1.1	1.1	1.1	1.1	1.2	1.2											
60.1	65.1	70.1	75.1	80.1	86.1	92.1	98.1	105.1	112.6	120.1	130.1	137.6	147.6	157.6	10.30	15.00	1.46	15.61	19.20	24.70	34.72	13.97	17.04	21.61	29.25
1.0	1.0	1.0	1.1	1.1	1.1	1.1	1.1	1.1	1.1	1.1	1.1	1.1	1.2	1.2											
67.1	72.1	77.1	82.1	87.1	—	—	—	—	—	—	—	—	—	—	6.70	9.75	1.46	8.78	10.80	13.91	19.78	*	*	*	*
1.0	1.0	1.1	1.1	1.1	—	—	—	—	—	—	—	—	—	—	*	*									
69.4	74.4	79.4	84.4	89.4	—	—	—	—	—	—	—	—	—	—	5.50	8.00	1.46	6.44	7.90	10.16	14.42	*	*	*	*
1.0	1.0	1.1	1.1	1.1	—	—	—	—	—	—	—	—	—	—	*	*									
62.5	67.5	72.5	77.5	82.5	88.5	94.5	100.5	107.5	115.0	122.5	132.5	140.0	150.0	160.1	9.00	13.20	1.47	13.18	16.22	20.89	29.53	11.59	14.15	17.98	24.59
1.0	1.0	1.0	1.1	1.1	1.1	1.1	1.1	1.1	1.1	1.1	1.1	1.1	1.2	1.2											
58.8	63.8	68.8	73.8	78.8	84.8	90.8	96.8	103.8	111.3	118.8	128.8	136.3	146.4	156.4	10.90	16.00	1.47	16.72	20.57	26.43	37.03	15.05	18.36	23.24	31.27
1.0	1.0	1.0	1.1	1.1	1.1	1.1	1.1	1.1	1.1	1.1	1.1	1.1	1.2	1.2											
67.8	72.8	77.8	82.8	87.8	—	—	—	—	—	—	—	—	—	—	6.30	9.25	1.48	8.01	9.84	12.67	18.02	*	*	*	*
1.0	1.0	1.1	1.1	1.1	—	—	—	—	—	—	—	—	—	—	*	*									
63.5	68.5	73.5	78.5	83.5	89.5	95.5	101.5	108.5	116.0	123.5	133.5	141.0	151.0	161.0	8.50	12.50	1.48	12.23	15.05	19.40	27.48	10.66	13.01	16.55	22.70
1.0	1.0	1.0	1.1	1.1	1.1	1.1	1.1	1.1	1.1	1.1	1.1	1.1	1.2	1.2											
48.8	53.8	58.8	63.8	68.8	74.8	80.8	86.8	93.8	101.3	108.8	118.8	126.3	136.3	146.3	16.00	23.60	1.48	25.89	31.68	40.25	**	23.90	28.91	35.86	**
1.0	1.0	1.0	1.1	1.1	1.1	1.1	1.1	1.1	1.1	1.1	1.1	1.1	1.2	1.2											
64.4	69.4	74.4	79.4	84.4	90.4	96.4	102.4	109.4	116.9	124.4	134.4	141.9	151.9	161.9	8.00	11.80	1.48	11.28	13.88	17.89	25.38	9.73	11.87	15.10	20.76
1.0	1.0	1.0	1.1	1.1	1.1	1.1	1.1	1.1	1.1	1.1	1.1	1.1	1.2	1.2											
55.4	60.4	65.4	70.4	75.4	81.4	87.4	93.4	100.4	108.0	115.5	125.5	133.0	143.0	153.0	12.50	18.70	1.50	19.65	24.14	30.94	42.90	17.90	21.79	27.45	36.25
1.0	1.0	1.0	1.1	1.1	1.1	1.1	1.1	1.1	1.1	1.1	1.1	1.1	1.2	1.2											

* = Diameters below RMA minimum for other than Cog-Belt V-belts. Use with Super Power-Wedge V-belts will result in reduced life and loss of efficiency.

⚠ **WARNING**** = Sheave Rim Speed in excess of 6500 feet per minute - see Page 236

Arc-Length Correction Factors are located beneath Center Distance Values

POWER-WEDGE PRE-ENGINEERED DRIVE SELECTION TABLES

5V/5VX PRE-ENGINEERED TABLES RATIO 1.51 - 1.64

Driven Speed for Motor Speed of				Sheave Outside Diameters		V-Belt Number and Center Distance (other sizes may be available, see page 214)																					
690 RPM	870 RPM	1160 RPM	1750 RPM	Small Sheave	Large Sheave	Speed Ratio	5VX 500	5VX 530	5VX 560	5VX 600	5VX 630	5VX 670	5VX 710	5VX 750	5VX 800	5VX 850	5VX 900	5VX 950	5VX 1000	5VX 1060	5VX 1120	5VX 1180	5VX 1250	5VX 1320	5VX 1400	5VX 1500
456	575	766	1156	7.50	11.30	1.51	—	11.6	13.1	15.1	16.6	18.6	20.6	22.7	25.2	27.7	30.2	32.7	35.2	38.2	41.2	44.2	47.7	51.2	55.2	60.2
							—	0.8	0.8	0.9	0.9	0.9	0.9	0.9	0.9	0.9	0.9	0.9	1.0	1.0	1.0	1.0	1.0	1.0	1.0	1.0
455	573	764	1153	14.00	21.20	1.52	—	—	—	—	—	—	—	—	—	—	—	19.5	22.1	25.1	28.1	31.1	34.7	38.2	42.2	47.2
							—	—	—	—	—	—	—	—	—	—	—	0.9	0.9	0.9	0.9	1.0	1.0	1.0	1.0	1.0
454	573	764	1152	9.25	14.00	1.52	—	—	—	—	—	15.1	17.1	19.1	21.6	24.1	26.6	29.1	31.7	34.7	37.7	40.7	44.2	47.7	51.7	56.7
				*	*		—	—	—	—	—	0.9	0.9	0.9	0.9	0.9	0.9	0.9	0.9	1.0	1.0	1.0	1.0	1.0	1.0	1.0
450	567	756	1140	5.90	9.00	1.53	13.2	14.7	16.2	18.2	19.7	21.7	23.7	25.8	28.3	30.8	33.3	35.8	38.5	41.3	44.3	47.3	50.8	54.3	58.3	63.3
				*	*		0.8	0.8	0.8	0.9	0.9	0.9	0.9	0.9	0.9	0.9	0.9	0.9	1.0	1.0	1.0	1.0	1.0	1.0	1.0	1.0
450	567	756	1140	4.40	6.70	1.53	16.2	17.7	19.2	21.3	22.8	24.8	26.8	28.8	31.3	33.8	36.3	38.8	41.3	44.3	47.3	50.3	53.8	57.3	61.3	66.3
				*	*		0.8	0.8	0.9	0.9	0.9	0.9	0.9	0.9	0.9	0.9	0.9	0.9	1.0	1.0	1.0	1.0	1.0	1.0	1.0	1.0
449	566	754	1138	4.65	7.10	1.54	15.7	17.2	18.7	20.7	22.2	24.2	26.2	28.2	30.7	33.2	35.8	38.3	40.8	43.8	46.8	49.8	53.3	56.8	60.8	65.8
				*	*		0.8	0.8	0.9	0.9	0.9	0.9	0.9	0.9	0.9	0.9	0.9	0.9	1.0	1.0	1.0	1.0	1.0	1.0	1.0	1.0
448	564	752	1135	4.90	7.50	1.54	15.2	16.7	18.2	20.2	21.7	23.7	25.7	27.7	30.2	32.7	35.2	37.7	40.2	43.2	46.2	49.2	52.7	56.2	60.2	65.2
				*	*		0.8	0.8	0.9	0.9	0.9	0.9	0.9	0.9	0.9	0.9	0.9	0.9	1.0	1.0	1.0	1.0	1.0	1.0	1.0	1.0
447	564	752	1134	7.10	10.90	1.54	10.7	12.2	13.7	15.7	17.3	19.3	21.3	23.3	25.8	28.3	30.8	33.3	35.8	38.8	41.8	44.8	48.3	51.8	55.8	60.8
							0.8	0.8	0.8	0.9	0.9	0.9	0.9	0.9	0.9	0.9	0.9	0.9	1.0	1.0	1.0	1.0	1.0	1.0	1.0	1.0
447	563	751	1133	9.75	15.00	1.54	—	—	—	—	—	—	15.8	17.9	20.4	22.9	25.4	27.9	30.4	33.5	36.5	39.5	43.0	46.5	50.5	55.5
							—	—	—	—	—	—	0.9	0.9	0.9	0.9	0.9	0.9	0.9	1.0	1.0	1.0	1.0	1.0	1.0	1.0
446	563	751	1132	6.70	10.30	1.55	11.5	13.0	14.5	16.6	18.1	20.1	22.1	24.1	26.6	29.1	31.6	34.1	36.6	39.6	42.6	45.6	49.1	52.6	56.6	61.6
				*	*		0.8	0.8	0.8	0.9	0.9	0.9	0.9	0.9	0.9	0.9	0.9	0.9	1.0	1.0	1.0	1.0	1.0	1.0	1.0	1.0
445	562	749	1130	5.20	8.00	1.55	14.6	16.1	17.6	19.6	21.1	23.1	25.1	27.1	29.6	32.1	34.6	37.1	39.6	42.6	45.6	48.6	52.1	55.6	59.6	64.6
				*	*		0.8	0.8	0.9	0.9	0.9	0.9	0.9	0.9	0.9	0.9	0.9	0.9	1.0	1.0	1.0	1.0	1.0	1.0	1.0	1.0
444	559	746	1125	5.50	8.50	1.56	13.9	15.4	16.9	18.9	20.4	22.5	24.5	26.5	29.0	31.5	34.0	36.5	39.0	42.0	45.0	48.0	51.5	55.0	59.0	64.0
				*	*		0.8	0.8	0.8	0.9	0.9	0.9	0.9	0.9	0.9	0.9	0.9	0.9	1.0	1.0	1.0	1.0	1.0	1.0	1.0	1.0
443	559	745	1124	6.30	9.75	1.56	12.3	13.8	15.3	17.3	18.8	20.8	22.8	24.8	27.3	29.8	32.3	34.9	37.4	40.4	43.4	46.4	49.9	54.4	57.4	62.4
				*	*		0.8	0.8	0.8	0.9	0.9	0.9	0.9	0.9	0.9	0.9	0.9	0.9	1.0	1.0	1.0	1.0	1.0	1.0	1.0	1.0
443	558	744	1123	10.30	16.00	1.56	—	—	—	—	—	—	—	16.6	19.1	21.7	24.2	26.7	29.2	32.2	35.2	38.2	41.7	45.3	49.3	54.3
							—	—	—	—	—	—	—	0.9	0.9	0.9	0.9	0.9	0.9	1.0	1.0	1.0	1.0	1.0	1.0	1.0
442	558	744	1122	8.50	13.20	1.56	—	—	—	12.7	14.3	16.3	18.3	20.3	22.8	25.3	27.9	30.4	32.9	35.9	38.9	41.9	45.4	48.9	52.9	57.9
							—	—	—	0.8	0.8	0.9	0.9	0.9	0.9	0.9	0.9	0.9	0.9	1.0	1.0	1.0	1.0	1.0	1.0	1.0
442	557	743	1121	9.00	14.00	1.56	—	—	—	—	13.2	15.2	17.3	19.3	21.8	24.3	26.8	29.3	31.8	34.8	37.9	40.9	44.4	47.9	51.9	56.9
							—	—	—	—	0.8	0.9	0.9	0.9	0.9	0.9	0.9	0.9	0.9	1.0	1.0	1.0	1.0	1.0	1.0	1.0
440	554	739	1115	8.00	12.50	1.57	—	—	—	13.7	15.2	17.3	19.3	21.3	23.8	26.3	28.8	31.3	33.8	36.8	39.8	42.8	46.3	49.8	53.9	58.9
							—	—	—	0.8	0.9	0.9	0.9	0.9	0.9	0.9	0.9	0.9	0.9	1.0	1.0	1.0	1.0	1.0	1.0	1.0
437	552	735	1110	15.00	23.60	1.58	—	—	—	—	—	—	—	—	—	—	—	—	—	22.3	25.3	28.4	31.9	35.4	39.4	44.5
							—	—	—	—	—	—	—	—	—	—	—	—	—	0.9	0.9	0.9	1.0	1.0	1.0	1.0
437	551	735	1109	5.90	9.25	1.58	13.0	14.5	16.0	18.0	19.5	21.5	23.5	25.5	28.1	30.6	33.1	35.6	38.1	41.1	44.1	47.1	50.6	54.1	58.1	63.1
				*	*		0.8	0.8	0.8	0.9	0.9	0.9	0.9	0.9	0.9	0.9	0.9	0.9	1.0	1.0	1.0	1.0	1.0	1.0	1.0	1.0
436	550	734	1107	7.50	11.80	1.58	—	—	12.7	14.7	16.2	18.2	20.2	22.2	24.7	27.3	29.8	32.3	34.8	37.8	40.8	43.8	47.3	50.8	54.8	59.8
							—	—	0.8	0.8	0.9	0.9	0.9	0.9	0.9	0.9	0.9	0.9	0.9	1.0	1.0	1.0	1.0	1.0	1.0	1.0
434	547	730	1101	11.80	18.70	1.59	—	—	—	—	—	—	—	—	—	18.2	20.8	23.3	25.8	28.8	31.9	34.9	38.4	41.9	45.9	50.9
							—	—	—	—	—	—	—	—	—	0.9	0.9	0.9	0.9	0.9	1.0	1.0	1.0	1.0	1.0	1.0
431	544	725	1094	7.10	11.30	1.60	—	11.9	13.4	15.4	16.9	18.9	20.9	23.0	25.5	28.0	30.5	33.0	35.5	38.5	41.5	44.5	48.0	51.5	55.5	60.5
							—	0.8	0.8	0.8	0.9	0.9	0.9	0.9	0.9	0.9	0.9	0.9	0.9	1.0	1.0	1.0	1.0	1.0	1.0	1.0
428	540	720	1086	13.20	21.20	1.61	—	—	—	—	—	—	—	—	—	—	—	20.1	22.6	25.7	28.7	31.7	35.3	38.8	42.8	47.8
							—	—	—	—	—	—	—	—	—	—	—	0.9	0.9	0.9	0.9	1.0	1.0	1.0	1.0	1.0
424	535	713	1076	4.65	7.50	1.63	15.4	16.9	18.4	20.4	21.9	23.9	25.9	27.9	30.4	32.9	35.4	37.9	40.4	43.4	46.4	49.4	52.9	56.4	60.4	65.4
				*	*		0.8	0.8	0.9	0.9	0.9	0.9	0.9	0.9	0.9	0.9	0.9	0.9	1.0	1.0	1.0	1.0	1.0	1.0	1.0	1.0
424	534	713	1075	4.40	7.10	1.63	15.9	17.4	18.9	20.9	22.4	24.4	26.4	28.4	30.9	33.4	35.9	38.4	40.9	43.9	46.9	49.9	53.5	57.0	61.0	66.0
				*	*		0.8	0.8	0.9	0.9	0.9	0.9	0.9	0.9	0.9	0.9	0.9	0.9	1.0	1.0	1.0	1.0	1.0	1.0	1.0	1.0
424	534	712	1075	9.25	15.00	1.63	—	—	—	—	—	14.2	16.2	18.2	20.8	23.3	25.8	28.3	30.8	33.8	36.8	39.9	43.4	46.9	50.9	55.9
							—	—	—	—	—	0.8	0.9	0.9	0.9	0.9	0.9	0.9	0.9	1.0	1.0	1.0	1.0	1.0	1.0	1.0
422	532	709	1069	6.70	10.90	1.64	11.0	12.5	14.0	16.0	17.6	19.6	21.6	23.6	26.1	28.6	31.1	33.6	36.1	39.1	42.1	45.1	48.6	52.1	56.1	61.1
				*	*		0.8	0.8	0.8	0.8	0.9	0.9	0.9	0.9	0.9	0.9	0.9	0.9	0.9	1.0	1.0	1.0	1.0	1.0	1.0	1.0

* = Diameters below RMA minimum for other than Cog-Belt V-belts. Use with Super Power-Wedge V-belts will result in reduced life and loss of efficiency.

⚠ **WARNING**** = Sheave Rim Speed in excess of 6500 feet per minute - see Page 236

Arc-Length Correction Factors are located beneath Center Distance Values

POWER-WEDGE PRE-ENGINEERED DRIVE SELECTION TABLES

5V/5VX PRE-ENGINEERED TABLES RATIO 1.51 - 1.64

V-Belt Number and Center Distance (Other sizes may be available, see page 214)																		Rated HP per Belt (Includes Added HP for Speed Ratio) Power-Wedge Cog-Belt (5VX) RPM of Small Sheave				Rated HP per Belt (Includes Added HP for Speed Ratio) Super Power-Wedge Belt (5V) RPM of Small Sheave			
5VX 1600	5VX 1700	5VX 1800	5VX 1900	5VX 2000	5V 2120	5V 2240	5V 2360	5V 2500	5V 2650	5V 2800	5V 3000	5V 3150	5V 3350	5V 3550	Small Sheave	Large Sheave	Speed Ratio	690 RPM	870 RPM	1160 RPM	1750 RPM	690 RPM	870 RPM	1160 RPM	1170 RPM
65.2	70.2	75.2	80.2	85.2	91.2	97.2	103.2	110.2	117.7	125.2	135.2	142.7	152.7	162.7	7.50	11.30	1.51	10.33	12.70	16.37	23.25	8.79	10.72	13.63	18.77
1.0	1.0	1.1	1.1	1.1	1.1	1.1	1.1	1.1	1.1	1.1	1.1	1.1	1.2	1.2											
52.2	57.2	62.2	67.3	72.3	78.3	84.3	90.3	97.3	104.8	112.3	122.3	129.8	139.8	149.8	14.00	21.20	1.52	22.36	27.42	35.02	48.01	20.51	24.91	31.20	40.30
1.0	1.0	1.0	1.1	1.1	1.1	1.1	1.1	1.1	1.1	1.1	1.1	1.1	1.2	1.2											
61.7	66.7	71.7	76.7	81.7	87.7	93.7	99.7	106.7	114.2	121.7	131.7	139.2	149.2	159.2	9.25	14.00	1.52	13.65	16.80	21.63	30.55	12.05	14.71	18.69	25.51
1.0	1.0	1.1	1.1	1.1	1.1	1.1	1.1	1.1	1.1	1.1	1.1	1.1	1.2	1.2											
68.3	73.3	78.3	83.3	88.3	—	—	—	—	—	—	—	—	—	—	5.90	9.00	1.53	7.23	8.87	11.42	16.23	*	*	*	*
1.0	1.0	1.1	1.1	1.1	—	—	—	—	—	—	—	—	—	—	*	*									
71.3	76.3	81.3	86.3	91.3	—	—	—	—	—	—	—	—	—	—	4.40	6.70	1.53	4.26	5.20	6.64	9.35	*	*	*	*
1.0	1.0	1.1	1.1	1.1	—	—	—	—	—	—	—	—	—	—	*	*									
70.8	75.8	80.8	85.8	90.8	—	—	—	—	—	—	—	—	—	—	4.65	7.10	1.54	4.76	5.82	7.45	10.52	*	*	*	*
1.0	1.0	1.1	1.1	1.1	—	—	—	—	—	—	—	—	—	—	*	*									
70.2	75.2	80.3	85.3	90.3	—	—	—	—	—	—	—	—	—	—	4.90	7.50	1.54	5.26	6.43	8.25	11.67	*	*	*	*
1.0	1.0	1.1	1.1	1.1	—	—	—	—	—	—	—	—	—	—	*	*									
65.8	70.8	75.8	80.8	85.8	91.8	97.8	103.8	110.8	118.3	125.8	135.8	143.4	153.4	163.4	7.10	10.90	1.54	9.56	11.75	15.15	21.53	8.03	9.79	12.44	17.15
1.0	1.0	1.1	1.1	1.1	1.1	1.1	1.1	1.1	1.1	1.1	1.1	1.1	1.2	1.2											
60.5	65.5	70.5	75.5	80.5	86.5	92.5	98.5	105.5	113.0	120.5	130.5	138.0	148.0	158.0	9.75	15.00	1.54	14.59	17.95	23.10	32.56	12.97	15.83	20.09	27.32
1.0	1.0	1.0	1.1	1.1	1.1	1.1	1.1	1.1	1.1	1.1	1.1	1.1	1.2	1.2											
66.6	71.6	76.6	81.6	86.6	—	—	—	—	—	—	—	—	—	—	6.70	10.30	8.78	8.78	10.80	13.91	19.78	*	*	*	*
1.0	1.0	1.1	1.1	1.1	—	—	—	—	—	—	—	—	—	—	*	*									
69.6	74.6	79.6	84.6	89.6	—	—	—	—	—	—	—	—	—	—	5.20	8.00	1.55	5.85	7.17	9.21	13.05	*	*	*	*
1.0	1.0	1.1	1.1	1.1	—	—	—	—	—	—	—	—	—	—	*	*									
69.0	74.0	79.0	84.0	89.0	—	—	—	—	—	—	—	—	—	—	5.50	8.50	1.56	6.44	7.90	10.16	14.42	*	*	*	*
1.0	1.0	1.1	1.1	1.1	—	—	—	—	—	—	—	—	—	—	*	*									
67.4	72.4	77.4	82.4	87.4	—	—	—	—	—	—	—	—	—	—	6.30	9.75	1.56	8.01	9.84	12.67	18.02	*	*	*	*
1.0	1.0	1.1	1.1	1.1	—	—	—	—	—	—	—	—	—	—	*	*									
59.3	64.3	69.3	74.3	79.3	85.3	91.3	97.3	104.3	111.8	119.3	129.3	136.8	146.8	156.8	10.30	16.00	1.56	15.61	19.20	24.70	34.72	13.97	17.04	21.61	29.25
1.0	1.0	1.1	1.1	1.1	1.1	1.1	1.1	1.1	1.1	1.1	1.1	1.1	1.2	1.2											
62.9	67.9	72.9	77.9	82.9	88.9	94.9	100.9	107.9	115.4	122.9	132.9	140.4	150.4	160.4	8.50	13.20	1.56	12.23	15.05	19.40	27.48	10.66	13.01	16.55	22.70
1.0	1.0	1.1	1.1	1.1	1.1	1.1	1.1	1.1	1.1	1.1	1.1	1.1	1.2	1.2											
61.9	66.9	71.9	76.9	81.9	87.9	93.9	99.9	106.9	114.4	121.9	131.9	139.4	149.4	159.4	9.00	14.00	1.56	13.18	16.22	20.89	29.53	11.59	14.15	17.98	24.59
1.0	1.0	1.0	1.1	1.1	1.1	1.1	1.1	1.1	1.1	1.1	1.1	1.1	1.2	1.2											
63.9	68.9	73.9	78.9	83.9	89.9	95.9	101.9	108.9	116.4	123.9	133.9	141.4	151.4	161.4	8.00	12.50	1.57	11.28	13.88	17.89	25.38	9.73	11.87	15.10	20.76
1.0	1.0	1.1	1.1	1.1	1.1	1.1	1.1	1.1	1.1	1.1	1.1	1.1	1.2	1.2											
49.5	54.5	59.5	64.5	69.6	75.6	81.6	87.6	94.6	102.1	109.6	119.6	127.1	137.1	147.1	15.00	23.60	1.58	24.19	29.64	37.76	**	22.29	27.03	33.70	**
1.0	1.0	1.0	1.0	1.1	1.1	1.1	1.1	1.1	1.1	1.1	1.1	1.1	1.2	1.2											
68.1	73.1	78.1	83.1	88.1	—	—	—	—	—	—	—	—	—	—	5.90	9.25	1.58	7.28	8.94	11.51	16.37	*	*	*	*
1.0	1.0	1.1	1.1	1.1	—	—	—	—	—	—	—	—	—	—	*	*									
64.8	69.8	74.8	79.8	84.8	90.8	96.8	102.8	109.8	117.3	124.8	134.8	142.3	152.3	162.3	7.50	11.80	1.58	10.38	12.77	16.47	23.39	8.86	10.81	13.76	18.96
1.0	1.0	1.1	1.1	1.1	1.1	1.1	1.1	1.1	1.1	1.1	1.1	1.1	1.2	1.2											
55.9	60.9	66.0	71.0	76.0	82.0	88.0	94.0	101.0	108.5	116.0	126.0	133.5	143.5	153.5	11.80	18.70	1.59	18.43	22.66	29.08	40.53	16.74	20.40	25.77	34.34
1.0	1.0	1.0	1.1	1.1	1.1	1.1	1.1	1.1	1.1	1.1	1.1	1.1	1.2	1.2											
65.5	70.5	75.5	80.5	85.5	91.5	97.5	103.5	110.5	118.0	125.5	135.5	143.0	153.0	163.0	7.10	11.30	1.60	9.61	11.82	15.24	21.67	8.10	9.88	12.57	17.34
1.0	1.0	1.1	1.1	1.1	1.1	1.1	1.1	1.1	1.1	1.1	1.1	1.1	1.2	1.2											
52.8	57.8	62.9	67.9	72.9	78.9	84.9	90.9	97.9	105.4	112.9	122.9	130.4	140.4	150.4	13.20	21.20	1.61	20.98	25.75	32.95	45.48	19.20	23.35	29.35	38.41
1.0	1.0	1.0	1.1	1.1	1.1	1.1	1.1	1.1	1.1	1.1	1.1	1.1	1.2	1.2											
70.4	75.4	80.4	85.4	90.4	—	—	—	—	—	—	—	—	—	—	4.65	7.50	1.63	4.81	5.89	7.54	10.66	*	*	*	*
1.0	1.0	1.1	1.1	1.1	—	—	—	—	—	—	—	—	—	—	*	*									
71.0	76.0	81.0	86.0	91.0	—	—	—	—	—	—	—	—	—	—	4.40	7.10	1.63	4.31	5.27	6.73	9.49	*	*	*	*
1.0	1.0	1.1	1.1	1.1	—	—	—	—	—	—	—	—	—	—	*	*									
60.9	65.9	70.9	75.9	80.9	86.9	92.9	98.9	105.9	113.4	120.9	130.9	138.4	148.4	158.4	9.25	15.00	1.63	13.70	16.86	21.72	30.69	12.13	14.81	18.82	25.70
1.0	1.0	1.0	1.1	1.1	1.1	1.1	1.1	1.1	1.1	1.1	1.1	1.1	1.2	1.2											
66.1	71.1	76.1	81.1	86.2	—	—	—	—	—	—	—	—	—	—				8.84	10.87	14.01	19.92	*	*	*	*
1.0	1.0	1.1	1.1	1.1	—	—	—	—	—	—	—	—	—	—	*	*									

* = Diameters below RMA minimum for other than Cog-Belt V-belts. Use with Super Power-Wedge V-belts will result in reduced life and loss of efficiency.

⚠ **WARNING**** = Sheave Rim Speed in excess of 6500 feet per minute - see Page 236

Arc-Length Correction Factors are located beneath Center Distance Values

POWER-WEDGE PRE-ENGINEERED DRIVE SELECTION TABLES

5V/5VX PRE-ENGINEERED TABLES RATIO 1.65 - 1.77

Driven Speed for Motor Speed of				Sheave Outside Diameters		V-Belt Number and Center Distance (other sizes may be available, see page 214)																					
690 RPM	870 RPM	1160 RPM	1750 RPM	Small Sheave	Large Sheave	Speed Ratio	5VX 500	5VX 530	5VX 560	5VX 600	5VX 630	5VX 670	5VX 710	5VX 750	5VX 800	5VX 850	5VX 900	5VX 950	5VX 1000	5VX 1060	5VX 1120	5VX 1180	5VX 1250	5VX 1320	5VX 1400	5VX 1500
419	529	705	1064	6.30	10.30	1.65	11.8	13.3	14.8	16.8	18.4	20.4	22.4	24.4	26.9	29.4	31.9	34.4	36.9	39.9	42.9	45.9	49.4	52.9	56.9	61.9
			*	*			0.8	0.8	0.8	0.9	0.9	0.9	0.9	0.9	0.9	0.9	0.9	0.9	1.0	1.0	1.0	1.0	1.0	1.0	1.0	1.0
419	529	705	1063	4.90	8.00	1.65	14.8	16.3	17.8	19.8	21.3	23.3	25.3	27.3	29.8	32.3	34.8	37.3	39.8	42.8	45.8	48.8	52.3	55.8	59.8	64.8
			*	*			0.8	0.8	0.8	0.9	0.9	0.9	0.9	0.9	0.9	0.9	0.9	0.9	1.0	1.0	1.0	1.0	1.0	1.0	1.0	1.0
419	528	704	1063	5.20	8.50	1.65	14.1	15.7	17.2	19.2	20.7	22.7	24.7	26.7	29.2	31.7	34.2	36.7	39.2	42.2	45.2	48.2	51.7	55.2	59.2	64.2
			*	*			0.8	0.8	0.8	0.9	0.9	0.9	0.9	0.9	0.9	0.9	0.9	0.9	1.0	1.0	1.0	1.0	1.0	1.0	1.0	1.0
419	528	704	1062	9.75	16.00	165	—	—	—	—	—	—	14.9	17.0	19.5	22.1	24.6	27.1	29.6	32.6	35.6	38.6	42.2	45.7	49.7	54.7
							—	—	—	—	—	—	0.9	0.9	0.9	0.9	0.9	0.9	0.9	0.9	1.0	1.0	1.0	1.0	1.0	1.0
419	528	704	1062	5.50	9.00	1.65	13.5	15.0	16.5	18.5	20.0	22.0	24.0	26.1	28.6	31.1	33.6	36.1	38.6	41.6	44.6	47.6	51.1	54.6	58.6	63.6
			*	*			0.8	0.8	0.8	0.9	0.9	0.9	0.9	0.9	0.9	0.9	0.9	0.9	1.0	1.0	1.0	1.0	1.0	1.0	1.0	1.0
417	526	701	1058	8.50	14.00	1.65	—	—	—	—	13.5	15.6	17.6	19.6	22.2	24.7	27.2	29.7	32.2	35.2	38.2	41.2	44.7	48.3	52.3	57.3
							—	—	—	—	0.8	0.9	0.9	0.9	0.9	0.9	0.9	0.9	0.9	1.0	1.0	1.0	1.0	1.0	1.0	1.0
416	525	700	1055	8.00	13.20	1.66	—	—	—	13.1	14.6	16.6	18.7	20.7	23.2	25.7	28.2	30.7	33.2	36.3	39.3	42.3	45.8	49.3	53.3	58.3
							—	—	—	0.8	0.8	0.9	0.9	0.9	0.9	0.9	0.9	0.9	0.9	1.0	1.0	1.0	1.0	1.0	1.0	1.0
415	524	698	1054	11.30	18.70	1.66	—	—	—	—	—	—	—	—	—	18.6	21.1	23.6	26.2	29.2	32.2	35.2	38.8	42.3	46.3	51.3
							—	—	—	—	—	—	—	—	—	0.9	0.9	0.9	0.9	0.9	1.0	1.0	1.0	1.0	1.0	1.0
415	523	697	1052	5.90	9.75	1.66	12.6	14.1	15.6	17.6	19.1	21.1	23.1	25.1	27.6	30.1	32.7	35.2	37.7	40.7	43.7	46.7	50.2	53.7	57.7	62.7
			*	*			0.8	0.8	0.8	0.9	0.9	0.9	0.9	0.9	0.9	0.9	0.9	0.9	1.0	1.0	1.0	1.0	1.0	1.0	1.0	1.0
413	521	694	1047	7.10	11.80	1.67	—	11.4	12.9	15.0	16.5	18.5	20.5	22.5	25.0	27.6	30.1	32.6	35.1	38.1	41.1	44.1	47.6	51.1	55.1	60.1
							—	0.8	0.8	0.8	0.9	0.9	0.9	0.9	0.9	0.9	0.9	0.9	0.9	1.0	1.0	1.0	1.0	1.0	1.0	1.0
412	520	693	1045	9.00	15.00	1.67	—	—	—	—	—	14.3	16.4	18.4	20.9	23.5	26.0	28.5	31.0	34.0	37.0	40.0	43.5	47.1	51.1	56.1
							—	—	—	—	—	0.8	0.9	0.9	0.9	0.9	0.9	0.9	0.9	1.0	1.0	1.0	1.0	1.0	1.0	1.0
412	519	692	1044	7.50	12.50	1.68	—	—	12.0	14.1	15.6	17.6	19.6	21.6	24.2	26.7	29.2	31.7	34.2	37.2	40.2	43.2	46.7	50.2	54.2	59.2
							—	—	0.8	0.8	0.8	0.9	0.9	0.9	0.9	0.9	0.9	1.0	1.0	1.0	1.0	1.0	1.0	1.0	1.0	1.0
408	515	686	1035	14.00	23.60	1.69	—	—	—	—	—	—	—	—	—	—	—	—	—	23.0	26.0	29.1	32.6	36.2	40.2	45.2
							—	—	—	—	—	—	—	—	—	—	—	—	—	0.9	0.9	0.9	1.0	1.0	1.0	1.0
407	513	685	1033	5.50	9.25	1.69	13.3	14.8	16.3	18.3	19.8	21.8	23.8	25.8	28.4	30.9	33.4	35.9	38.4	41.4	44.4	47.4	50.9	54.4	58.4	63.4
			*	*			0.8	0.8	0.8	0.9	0.9	0.9	0.9	0.9	0.9	0.9	0.9	0.9	1.0	1.0	1.0	1.0	1.0	1.0	1.0	1.0
407	513	684	1031	6.70	11.30	1.70	10.6	12.1	13.7	15.7	17.2	19.2	21.2	23.2	25.8	28.3	30.8	33.3	35.8	38.8	41.8	44.8	48.3	51.8	55.8	60.8
			*	*			0.8	0.8	0.8	0.8	0.9	0.9	0.9	0.9	0.9	0.9	0.9	0.9	0.9	1.0	1.0	1.0	1.0	1.0	1.0	1.0
405	511	682	1028	12.50	21.20	1.70	—	—	—	—	—	—	—	—	—	—	—	20.6	23.1	26.2	29.2	32.2	35.8	39.3	43.3	48.3
							—	—	—	—	—	—	—	—	—	—	—	0.9	0.9	0.9	0.9	1.0	1.0	1.0	1.0	1.0
401	506	674	1017	4.40	7.50	1.72	15.6	17.1	18.6	20.6	22.1	24.1	26.1	28.1	30.6	33.1	35.6	38.1	40.6	43.6	46.6	49.6	53.1	56.6	60.6	65.6
			*	*			0.8	0.8	0.9	0.9	0.9	0.9	0.9	0.9	0.9	0.9	0.9	0.9	1.0	1.0	1.0	1.0	1.0	1.0	1.0	1.0
401	505	674	1016	10.90	18.70	1.72	—	—	—	—	—	—	—	—	—	18.8	21.4	23.9	26.5	29.5	32.5	35.5	39.1	42.6	46.6	51.6
							—	—	—	—	—	—	—	—	—	0.9	0.9	0.9	0.9	0.9	0.9	1.0	1.0	1.0	1.0	1.0
397	501	668	1008	4.65	8.00	1.74	15.0	16.5	18.0	20.0	21.5	23.5	25.5	27.5	30.0	32.5	35.0	37.5	40.0	43.0	46.0	49.0	52.5	56.0	60.0	65.0
			*	*			0.8	0.8	0.8	0.9	0.9	0.9	0.9	0.9	0.9	0.9	0.9	0.9	1.0	1.0	1.0	1.0	1.0	1.0	1.0	1.0
397	501	668	1007	9.25	16.00	1.74	—	—	—	—	—	—	15.3	17.3	19.9	22.4	24.9	27.5	30.0	33.0	36.0	39.0	42.5	46.0	50.1	55.1
							—	—	—	—	—	—	0.9	0.9	0.9	0.9	0.9	0.9	0.9	0.9	1.0	1.0	1.0	1.0	1.0	1.0
396	499	666	1005	6.30	10.90	1.74	11.3	12.8	14.3	16.3	17.8	19.9	21.9	23.9	26.4	28.9	31.4	33.9	36.4	39.4	42.4	45.4	48.9	52.4	56.4	61.4
			*	*			0.8	0.8	0.8	0.8	0.9	0.9	0.9	0.9	0.9	0.9	0.9	0.9	0.9	1.0	1.0	1.0	1.0	1.0	1.0	1.0
395	499	665	1003	5.20	9.00	1.75	13.7	15.2	16.7	18.8	20.3	22.3	24.3	26.3	28.8	31.3	33.8	36.3	38.8	41.8	44.8	47.8	51.3	54.8	58.8	63.8
			*	*			0.8	0.8	0.8	0.9	0.9	0.9	0.9	0.9	0.9	0.9	0.9	0.9	1.0	1.0	1.0	1.0	1.0	1.0	1.0	1.0
394	497	663	1000	4.90	8.50	1.75	14.4	15.9	17.4	19.4	20.9	22.9	24.9	26.9	29.4	31.9	34.4	36.9	39.4	42.4	45.4	48.4	51.9	55.4	59.4	64.5
			*	*			0.8	0.8	0.8	0.9	0.9	0.9	0.9	0.9	0.9	0.9	0.9	0.9	1.0	1.0	1.0	1.0	1.0	1.0	1.0	1.0
393	496	661	997	16.00	28.00	1.75	—	—	—	—	—	—	—	—	—	—	—	—	—	—	—	23.7	27.3	30.9	34.9	40.0
							—	—	—	—	—	—	—	—	—	—	—	—	—	—	—	0.9	0.9	1.0	1.0	1.0
392	495	660	995	5.90	10.30	1.76	12.1	13.6	15.1	17.1	18.6	20.7	22.7	24.7	27.2	29.7	32.2	34.7	37.2	40.2	43.2	46.2	49.7	53.2	57.2	62.2
			*	*			0.8	0.8	0.8	0.8	0.9	0.9	0.9	0.9	0.9	0.9	0.9	0.9	0.9	1.0	1.0	1.0	1.0	1.0	1.0	1.0
392	494	659	995	8.00	14.00	176	—	—	—	—	13.9	15.9	18.0	20.0	22.5	25.0	27.6	30.1	32.6	35.6	38.6	41.6	45.1	48.6	52.6	57.6
							—	—	—	—	0.8	0.9	0.9	0.9	0.9	0.9	0.9	0.9	0.9	1.0	1.0	1.0	1.0	1.0	1.0	1.0
390	491	655	989	7.50	13.20	1.77	—	—	—	13.4	15.0	17.0	19.0	21.0	23.6	26.1	28.6	31.1	33.6	36.6	39.6	42.6	46.2	49.7	53.7	58.7
							—	—	—	0.8	0.8	0.9	0.9	0.9	0.9	0.9	0.9	0.9	0.9	1.0	1.0	1.0	1.0	1.0	1.0	1.0
390	491	655	988	7.10	12.50	1.77	—	—	12.3	14.4	15.9	17.9	19.9	21.9	24.5	27.0	29.5	32.0	34.5	37.5	40.5	43.5	47.0	50.5	54.5	59.5
							—	—	0.8	0.8	0.8	0.9	0.9	0.9	0.9	0.9	0.9	0.9	0.9	1.0	1.0	1.0	1.0	1.0	1.0	1.0
389	491	654	987	6.70	11.80	1.77	—	11.7	13.2	15.3	16.8	18.8	20.8	22.8	25.3	27.9	30.4	32.9	35.4	38.4	41.4	44.4	47.9	51.4	55.4	60.4
			*	*			—	0.8	0.8	0.8	0.9	0.9	0.9	0.9	0.9	0.9	0.9	0.9	0.9	1.0	1.0	1.0	1.0	1.0	1.0	1.0
389	490	654	987	8.50	15.00	1.77	—	—	—	—	—	14.7	16.7	18.8	21.3	23.8	26.3	28.9	31.4	34.4	37.4	40.4	43.9	47.4	51.4	56.4
							—	—	—	—	—	0.8	0.9	0.9	0.9	0.9	0.9	0.9	0.9	0.9	1.0	1.0	1.0	1.0	1.0	1.0

* = Diameters below RMA minimum for other than Cog-Belt V-belts. Use with Super Power-Wedge V-belts will result in reduced life and loss of efficiency.

⚠ **WARNING**** = Sheave Rim Speed in excess of 6500 feet per minute - see Page 236._Arc-Length Correction Factors are located beneath Center Distance Values

POWER-WEDGE PRE-ENGINEERED DRIVE SELECTION TABLES

5V/5VX PRE-ENGINEERED TABLES — RATIO 1.65 - 1.77

V-Belt Number and Center Distance (Other sizes may be available, see page 214)																		Rated HP per Belt (Includes Added HP for Speed Ratio) Power-Wedge Cog-Belt (5VX) RPM of Small Sheave				Rated HP per Belt (Includes Added HP for Speed Ratio) Super Power-Wedge Belt (5V) RPM of Small Sheave			
5VX 1600	5VX 1700	5VX 1800	5VX 1900	5VX 2000	5V 2120	5V 2240	5V 2360	5V 2500	5V 2650	5V 2800	5V 3000	5V 3150	5V 3350	5V 3550	Small Sheave	Large Sheave	Speed Ratio	690 RPM	870 RPM	1160 RPM	1750 RPM	690 RPM	870 RPM	1160 RPM	1170 RPM
66.9	71.9	76.9	81.9	86.9	—	—	—	—	—	—	—	—	—	—	6.30	10.30	1.65	8.06	9.91	12.76	18.16	*	*	*	*
1.0	1.0	1.1	1.1	1.1	—	—	—	—	—	—	—	—	—	—	*	*									
69.9	74.9	79.9	84.9	89.9	—	—	—	—	—	—	—	—	—	—	4.90	8.00	1.65	5.31	6.50	8.34	11.81	*	*	*	*
1.0	1.0	1.1	1.1	1.1	—	—	—	—	—	—	—	—	—	—	*	*									
69.2	74.2	79.2	84.2	89.2	—	—	—	—	—	—	—	—	—	—	5.20	8.50	1.65	5.90	7.24	9.30	13.19	*	*	*	*
1.0	1.0	1.1	1.1	1.1	—	—	—	—	—	—	—	—	—	—	*	*									
59.7	64.7	69.7	74.7	79.7	85.7	91.7	97.7	104.7	112.2	119.7	129.7	137.2	147.2	157.2	9.75	16.00	1.65	14.64	18.02	23.19	32.70	13.04	15.92	20.22	27.51
1.0	1.0	1.0	1.1	1.1	1.1	1.1	1.1	1.1	1.1	1.1	1.1	1.1	1.2	1.2											
68.6	73.6	78.6	83.6	88.6	—	—	—	—	—	—	—	—	—	—	5.50	9.00	1.65	6.50	7.97	10.25	14.56	*	*	*	*
1.0	1.0	1.1	1.1	1.1	—	—	—	—	—	—	—	—	—	—	*	*									
62.3	67.3	72.3	77.3	82.3	88.3	94.3	100.3	107.3	114.8	122.3	132.3	139.8	149.8	159.8	8.50	14.00	1.65	12.29	15.12	19.49	27.61	10.74	13.11	16.68	22.89
1.0	1.0	1.0	1.1	1.1	1.1	1.1	1.1	1.1	1.1	1.1	1.1	1.1	1.2	1.2											
63.3	68.3	73.3	78.3	83.3	89.3	95.3	101.3	108.3	115.8	123.3	133.3	140.8	150.8	160.8	8.00	13.20	1.66	1134	13.95	17.98	25.52	9.80	11.97	15.23	20.95
1.0	1.0	1.0	1.1	1.1	1.1	1.1	1.1	1.1	1.1	1.1	1.1	1.1	1.2	1.2											
56.3	61.3	66.3	71.3	76.3	82.4	88.4	94.4	101.4	108.9	116.4	126.4	133.9	143.9	153.9	11.30	18.70	1.66	17.52	21.54	27.66	38.68	15.85	19.32	24.45	32.77
1.0	1.0	1.0	1.1	1.1	1.1	1.1	1.1	1.1	1.1	1.1	1.1	1.1	1.2	1.2											
67.7	72.7	77.7	82.7	87.7	—	—	—	—	—	—	—	—	—	—	5.90	9.75	1.66	7.28	8.94	11.51	16.37	*	*	*	*
1.0	1.0	1.1	1.1	1.1	—	—	—	—	—	—	—	—	—	—	*	*									
65.1	70.1	75.1	80.1	85.1	91.1	97.1	103.1	110.1	117.6	125.1	135.1	142.6	152.6	162.6	7.10	11.80	1.67	9.61	11.82	15.24	21.67	8.10	9.88	12.57	17.34
1.0	1.0	1.1	1.1	1.1	1.1	1.1	1.1	1.1	1.1	1.1	1.1	1.1	1.2	1.2											
61.1	66.1	71.1	76.1	81.1	87.1	93.1	99.1	106.1	113.6	121.1	131.1	138.6	148.6	158.6	9.00	15.00	1.67	13.23	16.29	20.98	29.67	11.66	14.24	18.11	24.78
1.0	1.0	1.0	1.1	1.1	1.1	1.1	1.1	1.1	1.1	1.1	1.1	1.1	1.2	1.2											
64.2	69.2	74.2	79.3	84.3	90.3	96.3	102.3	109.3	116.8	124.3	134.3	141.8	151.8	161.8	7.50	12.50	1.68	10.38	12.77	16.47	23.39	8.86	10.81	13.76	18.96
1.0	1.0	1.0	1.1	1.1	1.1	1.1	1.1	1.1	1.1	1.1	1.1	1.1	1.2	1.2											
50.2	55.3	60.3	65.3	70.3	76.3	82.3	88.3	95.3	102.9	110.4	120.4	127.9	137.9	147.9	14.00	23.60	1.69	22.41	27.49	35.11	48.15	20.59	25.00	31.32	40.49
1.0	1.0	1.0	1.0	1.1	1.1	1.1	1.1	1.1	1.1	1.1	1.1	1.1	1.1	1.2											
68.4	73.4	78.4	83.4	88.4	—	—	—	—	—	—	—	—	—	—	5.50	9.25	1.69	6.50	7.97	10.25	14.56	*	*	*	*
1.0	1.0	1.1	1.1	1.1	—	—	—	—	—	—	—	—	—	—	*	*									
65.8	70.8	75.8	80.8	85.8	—	—	—	—	—	—	—	—	—	—	6.70	11.30	1.70	8.84	10.87	14.01	19.92	*	*	*	*
1.0	1.0	1.1	1.1	1.1	—	—	—	—	—	—	—	—	—	—	*	*									
53.4	58.4	63.4	68.4	73.4	79.4	85.4	91.4	98.4	105.9	113.4	123.5	131.0	141.0	151.0	12.50	21.20	1.70	19.71	24.21	31.03	43.04	17.98	21.89	27.58	36.44
1.0	1.0	1.0	1.0	1.1	1.1	1.1	1.1	1.1	1.1	1.1	1.1	1.1	1.2	1.2											
70.6	75.6	80.6	85.6	90.6	—	—	—	—	—	—	—	—	—	—	4.40	7.50	1.72	4.31	5.27	6.73	9.49	*	*	*	*
1.0	1.0	1.1	1.1	1.1	1.1	—	—	—	—	—	—	—	—	—	*	*									
56.6	61.6	66.6	71.6	76.7	82.7	88.7	94.7	101.7	109.2	116.7	126.7	134.2	144.2	154.2	10.90	18.70	1.72	16.78	20.64	26.52	37.17	15.13	18.46	23.37	31.47
1.0	1.0	1.0	1.1	1.1	1.1	1.1	1.1	1.1	1.1	1.1	1.1	1.1	1.2	1.2	*	*									
70.0	75.0	80.0	85.0	90.0	—	—	—	—	—	—	—	—	—	—	4.65	8.00	1.74	4.81	5.89	7.54	10.66	*	*	*	*
1.0	1.0	1.1	1.1	1.1	—	—	—	—	—	—	—	—	—	—	*	*									
60.1	65.1	70.1	75.1	80.1	86.1	92.1	98.1	105.1	112.6	120.1	130.1	137.6	147.6	157.6	9.25	16.00	1.74	13.70	16.86	21.72	30.69	12.13	14.81	18.82	25.70
1.0	1.0	1.0	1.1	1.1	1.1	1.1	1.1	1.1	1.1	1.1	1.1	1.1	1.2	1.2	*	*									
66.5	71.5	76.5	81.5	86.5	—	—	—	—	—	—	—	—	—	—	6.30	10.90	1.74	8.06	9.91	12.76	18.16	*	*	*	*
1.0	1.0	1.1	1.1	1.1	—	—	—	—	—	—	—	—	—	—	*	*									
68.8	73.8	78.8	83.8	88.8	—	—	—	—	—	—	—	—	—	—	5.20	9.00	1.75	5.90	7.24	9.30	13.19	*	*	*	*
1.0	1.0	1.1	1.1	1.1	—	—	—	—	—	—	—	—	—	—	*	*									
69.5	74.5	79.5	84.5	89.5	—	—	—	—	—	—	—	—	—	—	4.90	8.50	1.75	5.31	6.50	8.34	11.81	*	*	*	*
1.0	1.0	1.1	1.1	1.1	—	—	—	—	—	—	—	—	—	—	*	*									
45.0	50.1	55.1	60.1	65.2	71.2	77.2	83.2	90.2	97.8	105.3	115.3	122.8	132.8	142.8	16.00	28.00	1.75	25.95	31.75	40.34	**	23.97	29.00	35.98	**
1.0	1.0	1.0	1.0	1.0	1.1	1.1	1.1	1.1	1.1	1.1	1.1	1.1	1.1	1.2	*	*									
67.2	72.2	77.2	82.2	87.2	—	—	—	—	—	—	—	—	—	—	5.90	10.30	1.76	7.28	8.94	11.51	16.37	*	*	*	*
1.0	1.0	1.1	1.1	1.1	—	—	—	—	—	—	—	—	—	—	*	*									
62.6	67.7	72.7	77.7	82.7	88.7	94.7	100.7	107.7	115.2	122.7	132.7	140.2	150.2	160.2	8.00	14.00	1.76	11.34	13.95	17.98	25.52	9.80	11.97	15.23	20.95
1.0	1.0	1.0	1.1	1.1	1.1	1.1	1.1	1.1	1.1	1.1	1.1	1.1	1.2	1.2											
63.7	68.7	73.7	78.7	83.7	89.7	95.7	101.7	108.7	116.2	123.7	133.7	141.2	151.2	161.2	7.50	13.20	1.77	10.38	12.77	16.47	23.39	8.86	10.81	13.76	18.96
1.0	1.0	1.0	1.1	1.1	1.1	1.1	1.1	1.1	1.1	1.1	1.1	1.1	1.2	1.2											
64.5	69.6	74.6	79.6	84.6	90.6	96.6	102.6	109.6	117.1	124.6	134.6	142.1	152.1	162.1	7.10	12.50	1.77	9.61	11.82	15.24	21.67	8.10	9.88	12.57	17.34
1.0	1.0	1.0	1.1	1.1	1.1	1.1	1.1	1.1	1.1	1.1	1.1	1.1	1.2	1.2											
65.4	70.4	75.4	80.4	85.4	—	—	—	—	—	—	—	—	—	—	6.70	11.80	1.77	8.84	10.87	14.01	19.92	*	*	*	*
1.0	1.0	1.0	1.1	1.1	—	—	—	—	—	—	—	—	—	—	*	*									
61.5	66.5	71.5	76.5	81.5	87.5	93.5	99.5	106.5	114.0	121.5	131.5	139.0	149.0	159.0	8.50	15.00	1.77	12.29	15.12	19.49	27.61	19.74	13.11	16.68	22.89
1.0	1.0	1.0	1.1	1.1	1.1	1.1	1.1	1.1	1.1	1.1	1.1	1.1	1.2	1.2											

* = Diameters below RMA minimum for other than Cog-Belt V-belts. Use with Super Power-Wedge V-belts will result in reduced life and loss of efficiency.

⚠ **WARNING**** = Sheave Rim Speed in excess of 6500 feet per minute - see Page 236. Arc-Length Correction Factors are located beneath Center Distance Values

POWER-WEDGE PRE-ENGINEERED DRIVE SELECTION TABLES

5V/5VX PRE-ENGINEERED TABLES RATIO 1.79 - 1.96

Driven Speed for Motor Speed of				Sheave Outside Diameters		V-Belt Number and Center Distance (other sizes may be available, see page 214)																					
690 RPM	870 RPM	1160 RPM	1750 RPM	Small Sheave	Large Sheave	Speed Ratio	5VX 500	5VX 530	5VX 560	5VX 600	5VX 630	5VX 670	5VX 710	5VX 750	5VX 800	5VX 850	5VX 900	5VX 950	5VX 1000	5VX 1060	5VX 1120	5VX 1180	5VX 1250	5VX 1320	5VX 1400	5VX 1500
386	487	649	980	9.00	16.00	1.79	—	—	—	—	—	—	15.5	17.5	20.1	22.6	25.1	27.6	30.2	33.2	36.2	39.2	42.7	46.2	50.2	55.3
							—	—	—	—	—	—	0.8	0.9	0.9	0.9	0.9	0.9	0.9	0.9	1.0	1.0	1.0	1.0	1.0	1.0
386	487	649	979	5.50	9.75	1.79	12.8	14.4	15.9	17.9	19.4	21.4	23.4	25.4	27.9	30.4	33.0	35.5	38.0	41.0	44.0	47.0	50.5	54.0	58.0	63.0
							0.8	0.8	0.8	0.9	0.9	0.9	0.9	0.9	0.9	0.9	0.9	0.9	0.9	1.0	1.0	1.0	1.0	1.0	1.0	1.0
385	485	647	976	13.20	23.60	1.79	—	—	—	—	—	—	—	—	—	—	—	—	20.4	23.5	26.6	29.6	33.2	36.7	40.8	45.8
							—	—	—	—	—	—	—	—	—	—	—	—	0.9	0.9	0.9	0.9	1.0	1.0	1.0	1.0
385	485	647	975	5.20	9.25	1.79	13.5	15.0	16.5	18.5	20.0	22.1	24.1	26.1	28.6	31.1	33.6	36.1	38.6	41.6	44.6	47.6	51.1	54.6	58.6	63.6
			*	*			0.8	0.8	0.8	0.9	0.9	0.9	0.9	0.9	0.9	0.9	0.9	0.9	0.9	1.0	1.0	1.0	1.0	1.0	1.0	1.0
383	482	643	970	11.80	21.20	1.80	—	—	—	—	—	—	—	—	—	—	18.5	21.1	23.6	26.7	29.7	32.7	36.3	39.8	43.8	48.9
							—	—	—	—	—	—	—	—	—	—	0.9	0.9	0.9	0.9	0.9	1.0	1.0	1.0	1.0	1.0
382	482	642	969	6.30	11.30	1.81	10.9	12.4	14.0	16.0	17.5	19.5	21.5	23.5	26.1	28.6	31.1	33.6	36.1	39.1	42.1	45.1	48.6	52.1	56.1	61.1
			*	*			0.8	0.8	0.8	0.9	0.9	0.9	0.9	0.9	0.9	0.9	0.9	0.9	0.9	1.0	1.0	1.0	1.0	1.0	1.0	1.0
378	477	636	960	10.30	18.70	1.82	—	—	—	—	—	—	—	—	16.7	19.3	21.8	24.4	26.9	29.9	33.0	36.0	39.5	43.0	47.0	52.1
							—	—	—	—	—	—	—	—	0.9	0.9	0.9	0.9	0.9	0.9	0.9	1.0	1.0	1.0	1.0	1.0
376	474	631	953	4.40	8.00	1.84	15.2	16.7	18.2	20.2	21.7	23.7	25.7	27.7	30.2	32.7	35.2	37.7	40.2	43.2	46.2	49.2	52.7	56.2	60.2	65.2
			*	*			0.8	0.8	0.8	0.9	0.9	0.9	0.9	0.9	0.9	0.9	0.9	0.9	0.9	1.0	1.0	1.0	1.0	1.0	1.0	1.0
374	471	628	948	4.65	8.50	1.85	14.5	16.1	17.6	19.6	21.1	23.1	25.1	27.1	29.6	32.1	34.6	37.1	39.6	42.6	45.6	48.6	52.1	55.6	59.6	64.6
			*	*			0.8	0.8	0.8	0.9	0.9	0.9	0.9	0.9	0.9	0.9	0.9	0.9	0.9	1.0	1.0	1.0	1.0	1.0	1.0	1.0
372	469	626	944	4.90	9.00	1.85	13.9	15.4	17.0	19.0	20.5	22.5	24.5	26.5	29.0	31.5	34.0	36.5	39.0	42.0	45.0	48.0	51.5	55.0	59.0	64.1
			*	*			0.8	0.8	0.8	0.9	0.9	0.9	0.9	0.9	0.9	0.9	0.9	0.9	0.9	1.0	1.0	1.0	1.0	1.0	1.0	1.0
371	467	623	940	5.90	10.90	1.86	11.5	13.1	14.6	16.6	18.1	20.2	22.2	24.2	26.7	29.2	31.7	34.2	36.7	39.7	42.7	45.7	49.2	52.7	56.8	61.8
			*	*			0.8	0.8	0.8	0.8	0.9	0.9	0.9	0.9	0.9	0.9	0.9	0.9	0.9	1.0	1.0	1.0	1.0	1.0	1.0	1.0
369	465	620	935	7.10	13.20	1.87	—	—	11.7	13.7	15.3	17.3	19.3	21.3	23.9	26.4	28.9	31.4	33.9	36.9	39.9	42.9	46.5	50.0	54.0	59.0
							—	—	0.8	0.8	0.9	0.9	0.9	0.9	0.9	0.9	0.9	0.9	0.9	1.0	1.0	1.0	1.0	1.0	1.0	1.0
368	465	619	935	15.00	28.00	1.87	—	—	—	—	—	—	—	—	—	—	—	—	—	—	—	24.4	28.0	31.6	35.6	40.7
							—	—	—	—	—	—	—	—	—	—	—	—	—	—	—	0.9	0.9	0.9	0.9	1.0
367	463	618	932	7.50	14.00	1.88	—	—	—	12.7	14.2	16.3	18.3	20.4	22.9	25.4	27.9	30.4	33.0	36.0	39.0	42.0	45.5	49.0	53.0	58.0
							—	—	—	0.8	0.8	0.8	0.9	0.9	0.9	0.9	0.9	0.9	0.9	0.9	1.0	1.0	1.0	1.0	1.0	1.0
367	463	617	931	6.70	12.50	1.88	—	—	12.6	14.6	16.2	18.2	20.2	22.2	24.8	27.3	29.8	32.3	34.8	37.8	40.8	43.8	47.3	50.8	54.8	59.9
			*	*			—	—	0.8	0.8	0.8	0.9	0.9	0.9	0.9	0.9	0.9	0.9	0.9	1.0	1.0	1.0	1.0	1.0	1.0	1.0
366	462	616	929	11.30	21.20	1.88	—	—	—	—	—	—	—	—	—	—	18.8	21.4	24.0	27.0	30.1	33.1	36.6	40.2	44.2	49.2
							—	—	—	—	—	—	—	—	—	—	0.9	0.9	0.9	0.9	0.9	0.9	1.0	1.0	1.0	1.0
366	461	615	928	8.00	15.00	1.89	—	—	—	—	—	15.0	17.1	19.1	21.7	24.2	26.7	29.2	31.7	34.8	37.8	40.8	44.3	47.8	51.8	56.8
							—	—	—	—	—	0.8	0.9	0.9	0.9	0.9	0.9	0.9	0.9	0.9	1.0	1.0	1.0	1.0	1.0	1.0
366	461	615	927	6.30	11.80	1.89	—	12.0	13.5	15.5	17.1	19.1	21.1	23.1	25.6	28.1	30.7	33.2	35.7	38.7	41.7	44.7	48.2	51.7	55.7	60.7
			*	*			—	0.8	0.8	0.8	0.8	0.9	0.9	0.9	0.9	0.9	0.9	0.9	0.9	1.0	1.0	1.0	1.0	1.0	1.0	1.0
365	461	614	926	5.50	10.30	1.89	12.4	13.9	15.4	17.4	18.9	21.0	23.0	25.0	27.5	30.0	32.5	35.0	37.5	40.5	43.5	46.5	50.0	53.5	57.5	62.5
			*	*			0.8	0.8	0.8	0.8	0.9	0.9	0.9	0.9	0.9	0.9	0.9	0.9	0.9	1.0	1.0	1.0	1.0	1.0	1.0	1.0
365	460	613	925	5.20	9.75	1.89	13.1	14.6	16.1	18.1	19.6	21.6	23.6	25.7	28.2	30.7	33.2	35.7	38.2	41.2	44.2	47.2	50.7	54.2	58.2	63.2
			*	*			0.8	0.8	0.8	0.8	0.9	0.9	0.9	0.9	0.9	0.9	0.9	0.9	0.9	1.0	1.0	1.0	1.0	1.0	1.0	1.0
365	460	613	925	8.50	16.00	1.89	—	—	—	—	—	—	15.8	17.9	20.4	23.0	25.5	28.0	30.5	33.5	36.6	39.6	43.1	46.6	50.6	55.6
							—	—	—	—	—	—	0.8	0.9	0.9	0.9	0.9	0.9	0.9	0.9	1.0	1.0	1.0	1.0	1.0	1.0
364	459	612	923	12.50	23.60	1.90	—	—	—	—	—	—	—	—	—	—	—	—	20.9	24.0	27.1	30.1	33.7	37.2	41.3	46.3
							—	—	—	—	—	—	—	—	—	—	—	—	0.9	0.9	0.9	0.9	1.0	1.0	1.0	1.0
362	456	609	918	4.90	9.25	1.91	13.7	15.2	16.7	18.8	20.3	22.3	24.3	26.3	28.8	31.3	33.8	36.3	38.8	41.8	44.8	47.8	51.3	54.8	58.8	63.8
			*	*			0.8	0.8	0.8	0.8	0.9	0.9	0.9	0.9	0.9	0.9	0.9	0.9	0.9	1.0	1.0	1.0	1.0	1.0	1.0	1.0
358	451	602	908	9.75	18.70	1.93	—	—	—	—	—	—	—	—	17.1	19.6	22.2	24.8	27.3	30.3	33.4	36.4	39.9	43.4	47.4	52.5
							—	—	—	—	—	—	—	—	0.9	0.9	0.9	0.9	0.9	0.9	0.9	1.0	1.0	1.0	1.0	1.0
357	451	601	906	5.90	11.30	1.93	11.2	12.7	14.2	16.3	17.8	19.8	21.8	23.8	26.4	28.9	31.4	33.9	36.4	39.4	42.4	45.4	48.9	52.4	56.4	61.4
			*	*			0.8	0.8	0.8	0.8	0.9	0.9	0.9	0.9	0.9	0.9	0.9	0.9	0.9	1.0	1.0	1.0	1.0	1.0	1.0	1.0
353	445	594	896	4.40	8.50	1.95	14.7	16.2	17.7	19.8	21.3	23.3	25.3	27.3	29.8	32.3	34.8	37.3	39.8	42.8	45.8	48.8	52.3	55.8	59.8	64.8
			*	*			0.8	0.8	0.8	0.9	0.9	0.9	0.9	0.9	0.9	0.9	0.9	0.9	1.0	1.0	1.0	1.0	1.0	1.0	1.0	1.0
353	445	594	896	10.90	21.20	1.95	—	—	—	—	—	—	—	—	—	—	19.1	21.7	24.2	27.3	30.4	33.4	36.9	40.5	44.5	49.5
							—	—	—	—	—	—	—	—	—	—	0.9	0.9	0.9	0.9	0.9	0.9	1.0	1.0	1.0	1.0
353	445	593	895	4.65	9.00	1.96	14.1	15.6	17.1	19.2	20.7	22.7	24.7	26.7	29.2	31.7	34.2	36.7	39.2	42.2	45.2	48.2	51.7	55.2	59.2	64.2
			*	*			0.8	0.8	0.8	0.9	0.9	0.9	0.9	0.9	0.9	0.9	0.9	0.9	0.9	1.0	1.0	1.0	1.0	1.0	1.0	1.0

* = Diameters below RMA minimum for other than Cog-Belt V-belts. Use with Super Power-Wedge V-belts will result in reduced life and loss of efficiency.

⚠ **WARNING**** = Sheave Rim Speed in excess of 6500 feet per minute - see Page 236

Arc-Length Correction Factors are located beneath Center Distance Values

POWER-WEDGE PRE-ENGINEERED DRIVE SELECTION TABLES

5V/5VX PRE-ENGINEERED TABLES RATIO 1.79 - 1.96

V-Belt Number and Center Distance (Other sizes may be available, see page 214)																		Rated HP per Belt (Includes Added HP for Speed Ratio) Power-Wedge Cog-Belt (5VX) RPM of Small Sheave				Rated HP per Belt (Includes Added HP for Speed Ratio) Super Power-Wedge Belt (5V) RPM of Small Sheave			
5VX 1600	5VX 1700	5VX 1800	5VX 1900	5VX 2000	5V 2120	5V 2240	5V 2360	5V 2500	5V 2650	5V 2800	5V 3000	5V 3150	5V 3350	5V 3550	Small Sheave	Large Sheave	Speed Ratio	690 RPM	870 RPM	1160 RPM	1750 RPM	690 RPM	870 RPM	1160 RPM	1170 RPM
60.3	65.3	70.3	75.3	80.3	86.3	92.3	98.3	105.3	112.8	120.3	130.3	137.8	147.8	157.8	9.00	16.00	1.79	13.23	16.29	20.98	29.67	11.66	14.24	18.11	24.78
1.0	1.0	1.0	1.1	1.1	1.1	1.1	1.1	1.1	1.1	1.1	1.1	1.1	1.2	1.2											
68.0	73.0	78.0	83.0	88.0	—	—	—	—	—	—	—	—	—	—	5.50	9.75	1.79	6.50	7.97	10.25	14.56	*	*	*	*
1.0	1.0	1.1	1.1	1.1	—	—	—	—	—	—	—	—	—	—	*	*									
50.8	55.9	60.9	65.9	70.9	76.9	82.9	88.9	96.0	103.5	111.0	121.0	128.5	138.5	148.5	13.20	23.60	1.79	20.98	25.75	32.95	45.48	19.20	23.35	29.35	38.41
1.0	1.0	1.0	1.0	1.1	1.1	1.1	1.1	1.1	1.1	1.1	1.1	1.1	1.1	1.2											
68.6	73.6	78.6	83.6	88.6	—	—	—	—	—	—	—	—	—	—	5.20	9.25	1.79	5.90	7.24	9.30	13.19	*	*	*	*
1.0	1.0	1.1	1.1	1.1	—	—	—	—	—	—	—	—	—	—	*	*									
53.9	58.9	63.9	68.9	73.9	79.9	86.0	92.0	99.0	106.5	114.0	124.0	131.5	141.5	151.5	11.80	21.20	1.80	18.43	22.66	29.08	40.53	16.74	20.40	25.77	34.34
1.0	1.0	1.0	1.0	1.1	1.1	1.1	1.1	1.1	1.1	1.1	1.1	1.1	1.1	1.2											
66.1	71.1	76.1	81.1	86.1	—	—	—	—	—	—	—	—	—	—	6.30	11.30	1.81	8.06	9.91	12.76	18.16	*	*	*	*
1.0	1.0	1.1	1.1	1.1	—	—	—	—	—	—	—	—	—	—	*	*									
57.1	62.1	67.1	72.1	77.1	83.1	89.1	95.1	102.1	109.6	117.1	127.2	134.7	144.7	154.7	10.30	18.70	1.82	15.67	19.27	24.79	34.86	14.05	17.14	21.74	29.44
1.0	1.0	1.0	1.1	1.1	1.1	1.1	1.1	1.1	1.1	1.1	1.1	1.1	1.2	1.2											
70.2	75.2	80.2	85.2	90.2	—	—	—	—	—	—	—	—	—	—	4.40	8.00	1.84	4.31	5.27	6.73	9.49	*	*	*	*
1.0	1.0	1.1	1.1	1.1	—	—	—	—	—	—	—	—	—	—	*	*									
69.6	74.6	79.6	84.7	89.7	—	—	—	—	—	—	—	—	—	—	4.65	8.50	1.85	4.81	5.89	7.54	10.66	*	*	*	*
1.0	1.0	1.1	1.1	1.1	—	—	—	—	—	—	—	—	—	—	*	*									
69.1	74.1	79.1	84.1	89.1	—	—	—	—	—	—	—	—	—	—	4.90	9.00	1.85	5.31	6.50	8.34	11.81	*	*	*	*
1.0	1.0	1.1	1.1	1.1	—	—	—	—	—	—	—	—	—	—	*	*									
66.8	71.8	76.8	81.8	86.8	—	—	—	—	—	—	—	—	—	—	5.90	10.90	1.86	7.28	8.94	11.51	16.37	*	*	*	*
1.0	1.0	1.1	1.1	1.1	—	—	—	—	—	—	—	—	—	—	*	*									
64.0	69.0	74.0	79.0	84.0	90.0	96.0	102.0	109.0	116.5	124.0	134.0	141.5	151.5	161.5	7.10	13.20	1.87	9.61	11.82	15.24	21.67	8.10	9.88	12.57	17.34
1.0	1.0	1.0	1.1	1.1	1.1	1.1	1.1	1.1	1.1	1.1	1.1	1.1	1.2	1.2											
45.8	50.8	55.8	60.9	65.9	71.9	78.0	84.0	91.0	98.5	106.0	116.0	123.6	133.6	143.6	15.00	28.00	1.87	24.19	29.64	37.76	**	22.29	27.03	33.70	**
1.0	1.0	1.0	1.0	1.0	1.1	1.1	1.1	1.1	1.1	1.1	1.1	1.1	1.1	1.2											
63.0	68.0	73.0	78.0	83.1	89.1	95.1	101.1	108.1	115.6	123.1	133.1	140.6	150.6	160.6	7.50	14.00	1.88	10.38	12.77	16.47	23.39	8.86	10.81	13.76	18.96
1.0	1.0	1.0	1.1	1.1	1.1	1.1	1.1	1.1	1.1	1.1	1.1	1.1	1.2	1.2											
64.9	69.9	74.9	79.9	84.9	—	—	—	—	—	—	—	—	—	—	6.70	12.50	1.88	8.84	10.87	14.01	19.92	*	*	*	*
1.0	1.0	1.0	1.1	1.1	—	—	—	—	—	—	—	—	—	—	*	*									
54.2	59.3	64.3	69.3	74.3	80.3	86.3	92.3	99.4	106.9	114.4	124.4	131.9	141.9	151.9	11.30	21.20	1.88	17.52	21.54	27.66	38.68	15.85	19.32	24.45	32.77
1.0	1.0	1.0	1.0	1.1	1.1	1.1	1.1	1.1	1.1	1.1	1.1	1.1	1.1	1.2											
61.8	66.8	71.9	76.9	81.9	87.9	93.9	99.9	106.9	114.4	121.9	131.9	139.4	149.4	159.4	8.00	15.00	1.89	11.34	13.95	17.98	25.52	9.80	11.97	15.23	20.95
1.0	1.0	1.0	1.1	1.1	1.1	1.1	1.1	1.1	1.1	1.1	1.1	1.1	1.2	1.2											
65.7	70.7	75.7	80.7	85.7	—	—	—	—	—	—	—	—	—	—	6.30	11.80	1.89	8.06	9.91	12.76	18.16	*	*	*	*
1.0	1.0	1.0	1.1	1.1	—	—	—	—	—	—	—	—	—	—	*	*									
67.5	72.6	77.6	82.6	87.6	—	—	—	—	—	—	—	—	—	—	5.50	10.30	1.89	6.50	7.97	10.25	14.56	*	*	*	*
1.0	1.0	1.1	1.1	1.1	—	—	—	—	—	—	—	—	—	—	*	*									
68.2	73.2	78.2	83.2	88.2	—	—	—	—	—	—	—	—	—	—	5.20	9.75	1.89	5.90	7.24	9.30	13.19	*	*	*	*
1.0	1.0	1.1	1.1	1.1	—	—	—	—	—	—	—	—	—	—	*	*									
60.6	65.7	70.7	75.7	80.7	86.7	92.7	98.7	105.7	113.2	120.7	130.7	138.2	148.2	158.2	8.50	16.00	1.89	12.29	15.12	19.49	27.61	10.74	13.11	16.68	22.89
1.0	1.0	1.0	1.1	1.1	1.1	1.1	1.1	1.1	1.1	1.1	1.1	1.1	1.2	1.2											
51.3	56.4	61.4	66.4	71.4	77.4	83.5	89.5	96.5	104.0	111.5	121.5	129.0	139.0	149.0	12.50	23.60	1.90	19.71	24.21	31.03	43.04	17.98	21.89	27.58	36.44
1.0	1.0	1.0	1.0	1.1	1.1	1.1	1.1	1.1	1.1	1.1	1.1	1.1	1.1	1.2											
68.9	73.9	78.9	83.9	88.9	—	—	—	—	—	—	—	—	—	—	4.90	9.25	1.91	5.31	6.50	8.34	11.81	*	*	*	*
1.0	1.0	1.1	1.1	1.1	—	—	—	—	—	—	—	—	—	—	*	*									
57.5	62.5	67.5	72.5	77.5	83.5	89.5	95.9	102.6	110.1	117.6	127.6	135.1	145.1	155.1	9.75	18.70	1.93	14.64	18.02	23.19	32.70	13.04	15.92	20.22	27.51
1.0	1.0	1.0	1.1	1.1	1.1	1.1	1.1	1.1	1.1	1.1	1.1	1.1	1.2	1.2											
66.4	71.4	76.4	81.4	86.4	—	—	—	—	—	—	—	—	—	—	5.90	11.30	1.93	7.28	8.94	11.51	16.37	*	*	*	*
1.0	1.0	1.0	1.1	1.1	—	—	—	—	—	—	—	—	—	—	*	*									
69.8	74.8	79.8	84.8	89.8	—	—	—	—	—	—	—	—	—	—	4.40	8.50	1.95	4.31	5.27	6.73	9.49	*	*	*	*
1.0	1.0	1.0	1.1	1.1	—	—	—	—	—	—	—	—	—	—	*	*									
54.5	59.6	64.6	69.6	74.6	80.6	86.6	92.6	99.7	107.2	114.7	124.7	132.2	142.2	152.2	10.90	21.20	1.95	16.78	20.64	26.52	37.17	15.19	18.53	23.48	31.62
1.0	1.0	1.0	1.1	1.1	1.1	1.1	1.1	1.1	1.1	1.1	1.1	1.1	1.2	1.2											
69.2	74.2	79.2	84.3	89.3	—	—	—	—	—	—	—	—	—	—	4.65	9.00	1.96	4.81	5.89	7.54	10.66	*	*	*	*
1.0	1.0	1.0	1.1	1.1	—	—	—	—	—	—	—	—	—	—	*	*									

* = Diameters below RMA minimum for other than Cog-Belt V-belts. Use with Super Power-Wedge V-belts will result in reduced life and loss of efficiency.

⚠ **WARNING**** = Sheave Rim Speed in excess of 6500 feet per minute - see Page 236

Arc-Length Correction Factors are located beneath Center Distance Values

POWER-WEDGE PRE-ENGINEERED DRIVE SELECTION TABLES

5V/5VX PRE-ENGINEERED TABLES RATIO 1.97 - 2.13

Driven Speed for Motor Speed of				Sheave Outside Diameters		V-Belt Number and Center Distance (other sizes may be available, see page 214)																				
690 RPM	870 RPM	1160 RPM	1750 RPM	Small Sheave	Large Sheave	Speed Ratio	5VX 500	5VX 530	5VX 560	5VX 600	5VX 630	5VX 670	5VX 710	5VX 750	5VX 800	5VX 850	5VX 900	5VX 950	5VX 1000	5VX 1060	5VX 1120	5VX 1180	5VX 1250	5VX 1320	5VX 1400	5VX 1500
349	441	587	886	16.00	31.50	1.97	—	—	—	—	—	—	—	—	—	—	—	—	—	—	—	—	—	27.6	31.7	36.9
							—	—	—	—	—	—	—	—	—	—	—	—	—	—	—	—	—	0.9	0.9	1.0
348	438	584	882	6.70	13.20	1.98	—	—	11.9	14.0	15.5	17.6	19.6	21.6	24.3	26.7	29.2	31.7	34.2	37.2	40.2	43.2	46.8	50.3	54.3	59.3
			*	*			—	—	0.8	0.8	0.8	0.9	0.9	0.9	0.9	0.9	0.9	0.9	0.9	1.0	1.0	1.0	1.0	1.0	1.0	1.0
347	438	584	881	7.10	14.00	1.99	—	—	—	13.0	14.5	16.6	18.6	20.6	23.2	25.7	28.2	30.7	33.2	36.3	39.3	42.3	45.8	49.3	53.3	58.3
							—	—	—	0.8	0.8	0.8	0.9	0.9	0.9	0.9	0.9	0.9	0.9	0.9	1.0	1.0	1.0	1.0	1.0	1.0
345	435	580	875	5.20	10.30	2.00	12.6	14.1	15.6	17.6	19.2	21.2	23.2	25.2	27.7	30.2	32.7	35.2	37.7	40.7	43.8	46.8	50.3	53.8	57.8	62.8
			*	*			0.8	0.8	0.8	0.8	0.9	0.9	0.9	0.9	0.9	0.9	0.9	0.9	0.9	1.0	1.0	1.0	1.0	1.0	1.0	1.0
345	435	580	875	5.50	10.90	2.00	11.8	13.3	14.9	16.9	18.4	20.4	22.5	24.5	27.0	29.5	32.0	34.5	37.0	40.0	43.0	46.0	49.5	53.1	47.1	62.1
			*	*			0.8	0.8	0.8	0.8	0.9	0.9	0.9	0.9	0.9	0.9	0.9	0.9	0.9	1.0	1.0	1.0	1.0	1.0	1.0	1.0
345	435	580	875	6.30	12.50	2.00	—	11.3	12.9	14.9	16.4	18.5	20.5	22.5	25.0	27.6	30.1	32.6	35.1	38.1	41.1	44.1	47.6	51.1	55.1	60.2
			*	*			—	0.8	0.8	0.8	0.9	0.9	0.9	0.9	0.9	0.9	0.9	0.9	0.9	1.0	1.0	1.0	1.0	1.0	1.0	1.0
344	433	578	872	14.00	28.00	2.01	—	—	—	—	—	—	—	—	—	—	—	—	—	—	—	25.0	28.7	32.3	36.3	41.4
							—	—	—	—	—	—	—	—	—	—	—	—	—	—	—	0.9	0.9	1.0	1.0	1.0
344	433	578	871	11.80	23.60	2.01	—	—	—	—	—	—	—	—	—	—	—	—	21.4	24.5	27.6	30.6	34.2	37.7	41.8	46.8
							—	—	—	—	—	—	—	—	—	—	—	—	0.9	0.9	0.9	0.9	1.0	1.0	1.0	1.0
343	433	577	870	4.90	9.75	2.01	13.3	14.8	16.3	18.3	19.8	21.9	23.9	25.9	28.4	30.9	33.4	35.9	38.4	41.4	44.4	47.4	50.9	54.4	58.4	63.4
			*	*			0.8	0.8	0.8	0.8	0.9	0.9	0.9	0.9	0.9	0.9	0.9	0.9	0.9	1.0	1.0	1.0	1.0	1.0	1.0	1.0
343	433	577	870	4.65	9.25	2.01	13.9	15.4	16.9	18.9	20.5	22.5	24.5	26.5	29.0	31.5	34.0	36.5	39.0	42.0	45.0	48.0	51.5	55.0	59.0	64.0
			*	*			0.8	0.8	0.8	0.9	0.9	0.9	0.9	0.9	0.9	0.9	0.9	0.9	0.9	1.0	1.0	1.0	1.0	1.0	1.0	1.0
343	432	576	869	8.00	16.00	2.01	—	—	—	—	—	14.1	16.2	18.2	20.8	23.3	25.8	28.4	30.9	33.9	36.9	40.0	43.5	47.0	51.0	56.0
							—	—	—	—	—	0.8	0.8	0.9	0.9	0.9	0.9	0.9	0.9	0.9	1.0	1.0	1.0	1.0	1.0	1.0
343	432	576	869	7.50	15.00	2.01	—	—	—	—	13.3	15.4	17.4	19.5	22.0	24.5	27.1	29.6	32.1	35.1	38.1	41.2	44.7	48.2	52.2	57.2
							—	—	—	—	0.8	0.8	0.9	0.9	0.9	0.9	0.9	0.9	0.9	0.9	1.0	1.0	1.0	1.0	1.0	1.0
342	431	575	868	5.90	11.80	2.02	10.7	12.2	13.8	15.8	17.3	19.4	21.4	23.4	25.9	28.4	31.0	33.5	36.0	39.0	42.0	45.0	48.5	52.0	56.0	61.0
			*	*			0.8	0.8	0.8	0.8	0.8	0.9	0.9	0.9	0.9	0.9	0.9	0.9	0.9	1.0	1.0	1.0	1.0	1.0	1.0	1.0
339	428	571	861	9.25	18.70	2.03	—	—	—	—	—	—	—	—	17.4	20.2	22.6	25.1	27.6	30.7	33.7	36.7	40.3	43.8	47.8	52.8
							—	—	—	—	—	—	—	—	0.9	0.9	0.9	0.9	0.9	0.9	0.9	1.0	1.0	1.0	1.0	1.0
334	421	561	846	10.30	21.20	2.07	—	—	—	—	—	—	—	—	—	—	19.5	22.1	24.7	27.7	30.8	33.8	37.4	40.9	44.9	50.0
							—	—	—	—	—	—	—	—	—	—	0.9	0.9	0.9	0.9	0.9	0.9	1.0	1.0	1.0	1.0
333	420	560	486	4.40	9.00	2.07	14.3	15.8	17.3	19.3	20.8	22.9	24.9	26.9	29.4	31.9	34.4	36.9	39.4	42.4	45.4	48.4	51.9	55.4	59.4	64.4
			*	*			0.8	0.8	0.8	0.9	0.9	0.9	0.9	0.9	0.9	0.9	0.9	0.9	0.9	1.0	1.0	1.0	1.0	1.0	1.0	1.0
333	419	559	844	5.50	11.30	2.07	11.4	13.0	14.5	16.6	18.1	20.1	22.1	24.1	26.6	29.2	31.7	34.2	36.7	39.7	42.7	45.7	49.2	52.7	56.7	61.7
			*	*			0.8	0.8	0.8	0.8	0.8	0.9	0.9	0.9	0.9	0.9	0.9	0.9	0.9	1.0	1.0	1.0	1.0	1.0	1.0	1.0
330	416	555	837	9.00	18.70	2.09	—	—	—	—	—	—	—	—	17.6	20.2	22.7	25.3	27.8	30.9	33.9	36.9	40.5	44.0	48.0	53.0
							—	—	—	—	—	—	—	—	0.9	0.9	0.9	0.9	0.9	0.9	0.9	1.0	1.0	1.0	1.0	1.0
329	415	553	834	11.30	23.60	2.10	—	—	—	—	—	—	—	—	—	—	—	19.1	21.7	24.8	27.9	31.0	34.5	38.1	42.1	47.2
							—	—	—	—	—	—	—	—	—	—	—	0.9	0.9	0.9	0.9	0.9	0.9	1.0	1.0	1.0
328	413	551	831	6.70	14.00	2.11	—	—	—	13.2	14.8	16.8	18.9	20.9	23.5	26.0	28.5	31.0	33.5	36.6	39.6	42.6	46.1	49.6	53.6	58.6
			*	*			—	—	—	0.8	0.8	0.8	0.9	0.9	0.9	0.9	0.9	0.9	0.9	0.9	1.0	1.0	1.0	1.0	1.0	1.0
327	413	550	830	15.00	31.50	2.11	—	—	—	—	—	—	—	—	—	—	—	—	—	—	—	—	—	28.3	32.4	37.6
							—	—	—	—	—	—	—	—	—	—	—	—	—	—	—	—	—	0.9	0.9	1.0
327	412	549	828	6.30	13.20	2.11	—	—	12.2	14.3	15.8	17.9	19.9	21.9	24.4	27.0	29.5	32.0	34.5	37.5	40.5	43.5	47.1	50.6	54.6	59.6
			*	*			—	—	0.8	0.8	0.8	0.8	0.9	0.9	0.9	0.9	0.9	0.9	0.9	0.9	1.0	1.0	1.0	1.0	1.0	1.0
326	411	548	826	5.20	10.90	2.12	12.0	13.6	15.1	17.1	18.6	20.7	22.7	24.7	27.2	29.7	32.2	34.7	37.2	40.3	43.3	46.3	49.8	53.3	57.3	62.3
			*	*			0.8	0.8	0.8	0.8	0.9	0.9	0.9	0.9	0.9	0.9	0.9	0.9	0.9	1.0	1.0	1.0	1.0	1.0	1.0	1.0
325	410	547	825	4.65	9.75	2.12	13.4	15.0	16.5	18.5	20.0	22.0	24.1	26.1	28.6	31.1	33.6	36.1	38.6	41.6	44.6	47.6	51.1	54.6	58.6	63.6
			*	*			0.8	0.8	0.8	0.8	0.9	0.9	0.9	0.9	0.9	0.9	0.9	0.9	0.9	1.0	1.0	1.0	1.0	1.0	1.0	1.0
325	409	546	824	4.90	10.30	2.13	12.8	14.3	15.8	17.9	19.4	21.4	23.4	25.4	27.9	30.4	33.0	35.5	38.0	41.0	44.0	47.0	50.5	54.0	58.0	63.0
			*	*			0.8	0.8	0.8	0.8	0.9	0.9	0.9	0.9	0.9	0.9	0.9	0.9	0.9	1.0	1.0	1.0	1.0	1.0	1.0	1.0
324	409	545	822	4.40	9.25	2.13	14.1	15.6	17.1	19.1	20.6	22.6	24.7	26.7	29.2	31.7	34.2	36.7	39.2	42.2	45.2	48.2	51.7	55.2	59.2	64.2
			*	*			0.8	0.8	0.8	0.9	0.9	0.9	0.9	0.9	0.9	0.9	0.9	0.9	0.9	1.0	1.0	1.0	1.0	1.0	1.0	1.0
324	409	545	822	7.10	15.00	2.13	—	—	—	—	13.6	15.6	17.7	19.7	22.3	24.8	27.4	29.9	32.4	35.4	38.4	41.5	45.0	48.5	52.5	57.5
							—	—	—	—	0.8	0.8	0.8	0.9	0.9	0.9	0.9	0.9	0.9	0.9	1.0	1.0	1.0	1.0	1.0	1.0
324	408	545	822	13.20	28.00	2.13	—	—	—	—	—	—	—	—	—	—	—	—	—	—	22.4	25.6	29.2	32.8	36.9	42.0
							—	—	—	—	—	—	—	—	—	—	—	—	—	—	0.9	0.9	0.9	0.9	1.0	1.0

* = Diameters below RMA minimum for other than Cog-Belt V-belts. Use with Super Power-Wedge V-belts will result in reduced life and loss of efficiency.

⚠ **WARNING**** = Sheave Rim Speed in excess of 6500 feet per minute - see Page 236

Arc-Length Correction Factors are located beneath Center Distance Values

POWER-WEDGE PRE-ENGINEERED DRIVE SELECTION TABLES

5V/5VX PRE-ENGINEERED TABLES — RATIO 1.97 - 2.13

V-Belt Number and Center Distance (Other sizes may be available, see page 214)																		Rated HP per Belt (Includes Added HP for Speed Ratio) Power-Wedge Cog-Belt (5VX) RPM of Small Sheave				Rated HP per Belt (Includes Added HP for Speed Ratio) Super Power-Wedge Belt (5V) RPM of Small Sheave			
5VX 1600	5VX 1700	5VX 1800	5VX 1900	5VX 2000	5V 2120	5V 2240	5V 2360	5V 2500	5V 2650	5V 2800	5V 3000	5V 3150	5V 3350	5V 3550	Small Sheave	Large Sheave	Speed Ratio	690 RPM	870 RPM	1160 RPM	1750 RPM	690 RPM	870 RPM	1160 RPM	1170 RPM
42.0	47.1	52.1	57.2	62.2	68.3	74.3	70.3	87.3	94.9	103.4	112.4	119.9	130.0	140.0	16.00	31.50	1.97	25.95	31.75	40.34	**	24.03	29.08	36.09	**
1.0	1.0	1.0	1.0	1.0	1.1	1.1	1.1	1.1	1.1	1.1	1.1	1.1	1.1	1.2											
64.3	69.3	74.3	79.3	84.3	—	—	—	—	—	—	—	—	—	—	6.70	13.20	1.98	8.84	10.87	14.01	19.92	*	*	*	*
1.0	1.0	1.0	1.1	1.1	—	—	—	—	—	—	—	—	—	—	*	*									
63.3	68.3	73.3	78.4	83.4	89.4	95.4	101.4	108.4	115.9	123.4	133.4	140.9	150.9	160.9	7.10	14.00	1.99	9.61	11.82	15.24	21.67	8.17	9.96	12.67	17.49
1.0	1.0	1.0	1.0	1.0	1.1	1.1	1.1	1.1	1.1	1.1	1.1	1.1	1.2	1.2											
67.8	72.8	77.8	82.8	87.8	—	—	—	—	—	—	—	—	—	—	5.20	10.30	2.00	5.90	7.24	9.30	13.19	*	*	*	*
1.0	1.0	1.1	1.1	1.1	—	—	—	—	—	—	—	—	—	—	*	*									
67.1	72.1	77.1	82.1	87.1	—	—	—	—	—	—	—	—	—	—	5.50	10.90	2.00	6.50	7.97	10.25	14.56	*	*	*	*
1.0	1.0	1.0	1.1	1.1	—	—	—	—	—	—	—	—	—	—	*	*									
65.2	70.2	75.2	80.2	85.2	—	—	—	—	—	—	—	—	—	—	6.30	12.50	2.00	8.06	9.91	12.76	18.16	*	*	*	*
1.0	1.0	1.0	1.1	1.1	—	—	—	—	—	—	—	—	—	—	*	*									
46.5	51.5	56.6	61.6	66.6	72.7	78.7	84.7	91.7	99.3	106.8	116.8	124.3	134.3	144.3	14.00	28.00	2.01	22.41	27.49	35.11	48.15	20.65	25.08	31.43	40.65
1.0	1.0	1.0	1.0	1.0	1.1	1.1	1.1	1.1	1.1	1.1	1.1	1.1	1.1	1.2											
51.9	56.9	61.9	66.9	72.0	78.0	84.0	90.0	97.0	104.5	112.0	122.1	129.6	139.6	149.6	11.80	23.60	2.01	18.43	22.66	29.08	40.53	16.80	20.48	25.87	34.50
1.0	1.0	1.0	1.1	1.1	1.1	1.1	1.1	1.1	1.1	1.1	1.1	1.1	1.2	1.2											
68.5	73.5	78.5	83.5	88.5	—	—	—	—	—	—	—	—	—	—	4.90	9.75	2.01	5.31	6.50	8.34	11.81	*	*	*	*
1.0	1.0	1.1	1.1	1.1	—	—	—	—	—	—	—	—	—	—	*	*									
69.0	74.0	79.0	84.1	89.1	—	—	—	—	—	—	—	—	—	—	4.65	9.25	2.01	4.81	5.89	7.54	10.66	*	*	*	*
1.0	1.0	1.1	1.1	1.1	—	—	—	—	—	—	—	—	—	—	*	*									
61.0	66.0	71.0	76.0	81.1	87.1	93.1	99.1	106.1	113.6	121.1	131.1	138.6	148.6	158.6	8.00	16.00	2.01	11.34	13.95	17.98	25.52	9.86	12.04	15.33	21.11
1.0	1.0	1.0	1.1	1.1	1.1	1.1	1.1	1.1	1.1	1.1	1.1	1.1	1.2	1.2											
62.2	67.2	72.2	77.2	82.2	88.2	94.3	100.3	107.3	114.8	122.3	132.3	139.8	149.8	159.8	7.50	15.00	2.01	10.38	12.77	16.47	23.39	8.92	10.89	13.86	19.12
1.0	1.0	1.1	1.1	1.1	1.1	1.1	1.1	1.1	1.1	1.1	1.1	1.1	1.2	1.2											
66.0	71.0	76.0	81.0	86.0	—	—	—	—	—	—	—	—	—	—	5.90	11.80	2.02	7.28	8.94	11.51	16.37	*	*	*	*
1.0	1.0	1.0	1.1	1.1	—	—	—	—	—	—	—	—	—	—	*	*									
57.9	62.9	67.9	72.9	77.9	83.9	89.9	95.9	102.9	110.4	118.0	128.0	135.5	145.5	155.5	9.25	18.70	2.03	13.70	16.86	21.72	30.69	12.19	14.88	18.92	25.86
1.0	1.0	1.0	1.0	1.1	1.1	1.1	1.1	1.1	1.1	1.1	1.1	1.1	1.2	1.2											
55.0	60.0	65.0	70.0	75.1	81.1	87.1	93.1	100.1	107.6	115.1	125.1	132.6	142.7	152.7	10.30	21.20	2.07	15.67	19.27	24.79	34.86	14.11	17.22	21.84	29.60
1.0	1.0	1.0	1.0	1.1	1.1	1.1	1.1	1.1	1.1	1.1	1.1	1.1	1.1	1.2											
69.4	74.4	79.4	84.4	89.4	—	—	—	—	—	—	—	—	—	—	4.40	9.00	2.07	4.30	5.27	6.73	9.49	*	*	*	*
1.0	1.0	1.1	1.1	1.1	—	—	—	—	—	—	—	—	—	—	*	*									
66.7	71.7	76.8	81.8	86.8	—	—	—	—	—	—	—	—	—	—	5.50	11.30	2.07	6.50	7.97	10.25	14.56	*	*	*	*
1.0	1.0	1.0	1.1	1.1	—	—	—	—	—	—	—	—	—	—	*	*									
58.0	63.1	68.1	73.1	78.1	84.1	90.1	96.1	103.1	110.6	118.1	128.2	135.7	145.7	155.7	9.00	18.70	2.09	13.23	16.29	20.98	29.67	11.73	14.32	18.21	24.93
1.0	1.0	1.0	1.0	1.1	1.1	1.1	1.1	1.1	1.1	1.1	1.1	1.1	1.1	1.2											
52.2	57.3	62.3	67.3	72.3	78.3	84.4	90.4	104.9	112.4	122.4	129.9	140.0	150.0	160.0	11.30	23.60	2.10	17.52	21.54	27.66	38.68	15.91	19.40	24.55	32.93
1.0	1.0	1.0	1.0	1.1	1.1	1.1	1.1	1.1	1.1	1.1	1.1	1.1	1.1	1.2											
63.6	68.6	73.7	78.7	83.7	—	—	—	—	—	—	—	—	—	—	6.70	14.00	2.11	8.84	10.87	14.01	19.92	*	*	*	*
1.0	1.0	1.0	1.1	1.1	—	—	—	—	—	—	—	—	—	—	*	*									
42.7	47.8	52.8	57.9	62.9	69.0	75.0	81.1	88.1	85.6	103.1	113.2	120.7	130.7	140.7	15.00	31.50	2.11	24.19	29.64	37.76	**	22.35	27.10	33.81	**
1.0	1.0	1.0	1.0	1.0	1.1	1.1	1.1	1.1	1.1	1.1	1.1	1.1	1.1	1.2											
64.6	69.6	74.6	79.6	84.6	—	—	—	—	—	—	—	—	—	—	6.30	13.20	2.11	8.06	9.91	12.76	18.16	*	*	*	*
1.0	1.0	1.0	1.1	1.1	—	—	—	—	—	—	—	—	—	—	*	*									
67.3	72.3	77.3	82.3	87.3	—	—	—	—	—	—	—	—	—	—	5.20	10.90	2.12	5.90	7.24	9.30	13.19	*	*	*	*
1.0	1.0	1.0	1.1	1.1	—	—	—	—	—	—	—	—	—	—	*	*									
68.6	73.6	78.6	83.7	88.7	—	—	—	—	—	—	—	—	—	—	4.65	9.75	2.12	4.81	5.89	7.54	10.68	*	*	*	*
1.0	1.0	1.1	1.1	1.1	—	—	—	—	—	—	—	—	—	—	*	*									
68.0	73.0	78.0	83.0	88.0	—	—	—	—	—	—	—	—	—	—	4.90	10.30	2.13	5.31	6.50	8.34	11.81	*	*	*	*
1.0	1.0	1.0	1.1	1.1	—	—	—	—	—	—	—	—	—	—	*	*									
69.2	74.2	79.2	84.2	89.2	—	—	—	—	—	—	—	—	—	—	4.40	9.25	2.13	4.31	5.27	6.73	9.49	*	*	*	*
1.0	1.0	1.1	1.1	1.1	—	—	—	—	—	—	—	—	—	—	*	*									
62.5	67.5	72.5	77.5	82.5	88.6	94.6	100.6	107.6	115.1	122.8	132.6	140.1	150.1	160.1	7.10	15.00	2.13	9.61	11.82	15.24	21.67	8.17	9.96	12.67	17.49
1.0	1.0	1.0	1.1	1.1	1.1	1.1	1.1	1.1	1.1	1.1	1.1	1.1	1.2	1.2											
47.1	52.1	57.2	62.2	67.2	73.3	79.3	85.3	92.3	99.9	107.4	117.4	124.9	134.9	145.0	13.20	28.00	2.13	20.98	25.75	32.95	45.48	19.26	23.43	29.46	38.56
1.0	1.0	1.0	1.0	1.0	1.1	1.1	1.1	1.1	1.1	1.1	1.1	1.1	1.1	1.2											

* = Diameters below RMA minimum for other than Cog-Belt V-belts. Use with Super Power-Wedge V-belts will result in reduced life and loss of efficiency.

⚠ **WARNING**** = Sheave Rim Speed in excess of 6500 feet per minute - see Page 236

Arc-Length Correction Factors are located beneath Center Distance Values

POWER-WEDGE PRE-ENGINEERED DRIVE SELECTION TABLES

5V/5VX PRE-ENGINEERED TABLES RATIO 2.14 - 2.38

Driven Speed for Motor Speed of				Sheave Outside Diameters		V-Belt Number and Center Distance (other sizes may be available, see page 214)																					
690 RPM	870 RPM	1160 RPM	1750 RPM	Small Sheave	Large Sheave	Speed Ratio	5VX 500	5VX 530	5VX 560	5VX 600	5VX 630	5VX 670	5VX 710	5VX 750	5VX 800	5VX 850	5VX 900	5VX 950	5VX 1000	5VX 1060	5VX 1120	5VX 1180	5VX 1250	5VX 1320	5VX 1400	5VX 1500
323	407	543	819	5.90	12.50	2.14	—	11.6	13.1	15.2	16.7	18.8	20.8	22.8	25.3	27.9	30.4	32.9	35.4	38.4	41.4	44.4	47.9	51.4	55.5	60.5
			*	*			—	0.8	0.8	0.8	0.8	0.9	0.9	0.9	0.9	0.9	0.9	0.9	0.9	1.0	1.0	1.0	1.0	1.0	1.0	1.0
321	405	540	814	7.50	16.00	2.15	—	—	—	—	—	14.4	16.5	18.6	21.1	23.7	26.2	28.7	31.3	34.3	37.3	40.3	43.8	47.4	51.4	56.4
							—	—	—	—	—	0.8	0.8	0.9	0.9	0.9	0.9	0.9	0.9	0.9	1.0	1.0	1.0	1.0	1.0	1.0
318	402	535	808	5.50	11.80	2.17	11.0	12.5	14.1	16.1	17.6	19.7	21.7	23.7	26.2	28.7	31.3	33.8	36.3	39.3	42.3	45.3	48.8	52.3	56.3	61.3
			*	*			0.8	0.8	0.8	0.8	0.8	0.9	0.9	0.9	0.9	0.9	0.9	0.9	0.9	1.0	1.0	1.0	1.0	1.0	1.0	1.0
317	400	533	804	10.90	23.60	2.18	—	—	—	—	—	—	—	—	—	—	—	19.4	22.0	25.1	28.2	31.3	34.8	38.4	42.4	47.5
							—	—	—	—	—	—	—	—	—	—	—	0.9	0.9	0.9	0.9	0.9	0.9	1.0	1.0	1.0
316	398	531	800	9.75	21.20	2.19	—	—	—	—	—	—	—	—	—	17.2	19.9	22.5	25.0	28.1	31.2	34.2	37.8	41.3	45.3	50.4
							—	—	—	—	—	—	—	—	—	0.8	0.9	0.9	0.9	0.9	0.9	0.9	1.0	1.0	1.0	1.0
314	396	528	797	5.20	11.30	2.20	11.6	13.2	14.7	16.8	18.3	20.3	22.3	24.3	26.9	29.4	31.9	34.4	36.9	39.9	42.9	45.9	49.4	53.0	57.0	62.0
			*	*			0.8	0.8	0.8	0.8	0.8	0.9	0.9	0.9	0.9	0.9	0.9	0.9	0.9	1.0	1.0	1.0	1.0	1.0	1.0	1.0
393	524	790	8.50	18.70	2.21		—	—	—	—	—	—	—	15.3	17.9	20.5	23.1	25.6	28.2	31.2	34.3	37.3	40.8	44.3	48.4	53.4
							—	—	—	—	—	—	—	0.8	0.8	0.9	0.9	0.9	0.9	0.9	0.9	1.0	1.0	1.0	1.0	1.0
308	388	517	781	4.65	10.30	2.24	13.0	14.5	16.0	18.0	19.6	21.6	23.6	25.6	28.1	30.6	33.1	35.6	38.2	41.2	44.2	47.2	50.7	54.2	58.2	63.2
			*	*			0.8	0.8	0.8	0.8	0.9	0.9	0.9	0.9	0.9	0.9	0.9	0.9	0.9	1.0	1.0	1.0	1.0	1.0	1.0	1.0
308	388	517	781	6.30	14.00	2.24	—	—	—	13.5	15.1	17.1	19.2	21.2	23.7	26.3	28.8	31.3	33.8	36.9	39.9	42.9	46.4	49.9	53.9	58.9
			*	*			—	—	—	0.8	0.8	0.8	0.9	0.9	0.9	0.9	0.9	0.9	0.9	0.9	1.0	1.0	1.0	1.0	1.0	1.0
307	388	517	780	4.40	9.75	2.24	13.6	15.2	16.7	18.7	20.2	22.2	24.2	26.3	28.8	31.3	33.8	36.3	38.8	41.8	44.8	47.8	51.3	54.8	58.8	63.8
			*	*			0.8	0.8	0.8	0.8	0.9	0.9	0.9	0.9	0.9	0.9	0.9	0.9	0.9	1.0	1.0	1.0	1.0	1.0	1.0	1.0
307	387	516	778	4.90	10.90	2.25	12.2	13.8	15.3	17.3	18.9	20.9	22.9	24.9	27.4	29.9	32.5	35.0	37.5	40.5	43.5	46.5	50.0	53.5	57.5	62.5
			*	*			0.8	0.8	0.8	0.8	0.8	0.9	0.9	0.9	0.9	0.9	0.9	0.9	0.9	1.0	1.0	1.0	1.0	1.0	1.0	1.0
307	387	516	778	12.50	28.00	2.25	—	—	—	—	—	—	—	—	—	—	—	—	—	—	22.9	26.0	29.7	33.3	37.4	42.5
							—	—	—	—	—	—	—	—	—	—	—	—	—	—	0.9	0.9	0.9	0.9	1.0	1.0
385	514	775	5.90	13.20	2.26		—	—	12.5	14.5	16.1	18.1	20.2	22.2	24.7	27.3	29.8	32.3	34.8	37.8	40.8	43.8	47.4	50.9	54.9	59.9
			*	*			—	—	0.8	0.8	0.8	0.8	0.9	0.9	0.9	0.9	0.9	0.9	0.9	0.9	1.0	1.0	1.0	1.0	1.0	1.0
305	385	514	775	14.00	31.50	2.28	—	—	—	—	—	—	—	—	—	—	—	—	—	—	—	—	25.2	28.9	33.1	38.3
							—	—	—	—	—	—	—	—	—	—	—	—	—	—	—	—	0.9	0.9	0.9	1.0
304	383	511	770	7.10	16.00	2.27	—	—	—	—	—	14.7	16.8	18.8	21.4	23.9	26.5	29.0	31.5	34.6	37.6	40.6	44.1	47.6	51.7	56.7
							—	—	—	—	—	0.8	0.8	0.9	0.9	0.9	0.9	0.9	0.9	0.9	1.0	1.0	1.0	1.0	1.0	1.0
301	379	506	763	5.20	11.80	2.29	11.2	12.7	14.3	16.3	17.8	19.9	21.9	23.9	26.4	29.0	31.5	34.0	36.5	39.5	42.5	45.5	49.0	52.5	56.6	61.6
			*	*			0.8	0.8	0.8	0.8	0.8	0.9	0.9	0.9	0.9	0.9	0.9	0.9	0.9	1.0	1.0	1.0	1.0	1.0	1.0	1.0
300	379	505	762	5.50	12.50	2.30	—	11.8	13.4	15.5	17.0	19.0	21.1	23.1	25.6	28.1	30.7	33.2	35.7	38.7	41.7	44.7	48.2	51.7	55.8	60.8
			*	*			—	0.8	0.8	0.8	0.8	0.9	0.9	0.9	0.9	0.9	0.9	0.9	0.9	0.9	1.0	1.0	1.0	1.0	1.0	1.0
299	378	503	760	10.30	23.60	2.30	—	—	—	—	—	—	—	—	—	—	—	19.8	22.4	25.5	28.6	31.7	35.2	38.8	42.9	47.9
							—	—	—	—	—	—	—	—	—	—	—	0.9	0.9	0.9	0.9	0.9	0.9	1.0	1.0	1.0
299	377	503	759	9.25	21.20	2.31	—	—	—	—	—	—	—	—	—	17.6	20.2	22.8	25.4	28.5	31.5	34.6	38.1	41.7	45.7	50.7
							—	—	—	—	—	—	—	—	—	0.8	0.9	0.9	0.9	0.9	0.9	0.9	1.0	1.0	1.0	1.0
293	370	493	744	16.00	37.50	2.35	—	—	—	—	—	—	—	—	—	—	—	—	—	—	—	—	—	—	—	31.1
							—	—	—	—	—	—	—	—	—	—	—	—	—	—	—	—	—	—	—	0.9
293	370	493	743	8.00	18.70	2.35	—	—	—	—	—	—	—	15.6	18.2	20.8	23.4	26.0	28.5	31.6	34.6	37.6	41.2	44.7	48.7	53.8
							—	—	—	—	—	—	—	0.8	0.8	0.9	0.9	0.9	0.9	0.9	0.9	1.0	1.0	1.0	1.0	1.0
291	367	489	738	9.00	21.20	2.37	—	—	—	—	—	—	—	—	—	17.7	20.4	23.0	25.6	28.6	31.7	34.7	38.3	41.8	45.9	50.9
							—	—	—	—	—	—	—	—	—	0.8	0.9	0.9	0.9	0.9	0.9	0.9	1.0	1.0	1.0	1.0
291	367	489	738	4.40	10.30	2.37	13.1	14.7	16.2	18.2	19.7	21.8	23.8	25.8	28.3	30.8	33.3	35.8	38.3	41.3	44.4	47.4	50.9	54.4	58.4	63.4
			*	*			0.8	0.8	0.8	0.8	0.9	0.9	0.9	0.9	0.9	0.9	0.9	0.9	0.9	1.0	1.0	1.0	1.0	1.0	1.0	1.0
291	367	489	737	4.65	10.90	2.37	12.4	13.9	15.5	17.5	19.0	21.1	23.1	25.1	27.6	30.1	32.6	35.1	37.7	40.7	43.7	46.7	50.2	53.7	57.7	62.7
			*	*			0.8	0.8	0.8	0.8	0.8	0.9	0.9	0.9	0.9	0.9	0.9	0.9	0.9	1.0	1.0	1.0	1.0	1.0	1.0	1.0
289	365	486	734	11.80	28.00	2.38	—	—	—	—	—	—	—	—	—	—	—	—	—	—	23.3	26.5	30.2	33.8	37.9	43.0
							—	—	—	—	—	—	—	—	—	—	—	—	—	—	0.9	0.9	0.9	0.9	1.0	1.0

* = Diameters below RMA minimum for other than Cog-Belt V-belts. Use with Super Power-Wedge V-belts will result in reduced life and loss of efficiency.

⚠ **WARNING**** = Sheave Rim Speed in excess of 6500 feet per minute - see Page 236

Arc-Length Correction Factors are located beneath Center Distance Values

POWER-WEDGE PRE-ENGINEERED DRIVE SELECTION TABLES

5V/5VX PRE-ENGINEERED TABLES — RATIO 2.14 - 2.39

V-Belt Number and Center Distance (Other sizes may be available, see page 214)																		Rated HP per Belt (Includes Added HP for Speed Ratio) Power-Wedge Cog-Belt (5VX) RPM of Small Sheave				Rated HP per Belt (Includes Added HP for Speed Ratio) Super Power-Wedge Belt (5V) RPM of Small Sheave			
5VX 1600	5VX 1700	5VX 1800	5VX 1900	5VX 2000	5V 2120	5V 2240	5V 2360	5V 2500	5V 2650	5V 2800	5V 3000	5V 3150	5V 3350	5V 3550	Small Sheave	Large Sheave	Speed Ratio	690 RPM	870 RPM	1160 RPM	1750 RPM	690 RPM	870 RPM	1160 RPM	1170 RPM
65.5	70.5	75.5	80.5	85.5	—	—	—	—	—	—	—	—	—	—	5.90	12.50	2.14	7.28	8.94	11.51	16.37	*	*	*	*
1.0	1.0	1.0	1.1	1.1	—	—	—	—	—	—	—	—	—	—	*	*									
61.4	66.4	71.4	76.4	81.4	87.4	93.4	99.5	106.5	114.0	121.5	131.5	139.0	149.0	159.0	7.50	16.00	2.15	10.38	12.77	16.47	23.39	8.92	10.89	13.86	19.12
1.0	1.0	1.0	1.1	1.1	1.1	1.1	1.1	1.1	1.1	1.1	1.1	1.1	1.2	1.2											
66.3	71.3	76.3	81.4	86.4	—	—	—	—	—	—	—	—	—	—	5.50	11.80	2.17	6.50	7.97	10.25	14.56	*	*	*	*
1.0	1.0	1.0	1.1	1.1	—	—	—	—	—	—	—	—	—	—	*	*									
52.5	57.6	62.6	67.6	72.6	78.6	84.7	90.7	97.7	105.2	112.7	122.7	130.2	140.3	150.3	10.90	23.60	2.18	16.78	20.64	26.52	37.17	15.19	18.53	23.48	31.62
1.0	1.0	1.0	1.0	1.1	1.1	1.1	1.1	1.1	1.1	1.1	1.1	1.1	1.1	1.2											
55.4	60.4	65.4	70.5	75.5	81.5	87.5	93.5	100.5	108.0	115.6	125.6	133.1	143.1	153.1	9.75	21.20	2.19	14.64	18.02	23.19	32.70	13.10	16.00	20.32	27.67
1.0	1.0	1.0	1.0	1.1	1.1	1.1	1.1	1.1	1.1	1.1	1.1	1.1	1.1	1.2											
67.0	72.0	77.0	82.0	87.0	—	—	—	—	—	—	—	—	—	—	5.20	11.30	2.20	5.90	7.24	9.30	13.19	*	*	*	*
1.0	1.0	1.0	1.1	1.1	—	—	—	—	—	—	—	—	—	—	*	*									
58.4	63.4	68.4	73.5	78.5	84.5	90.5	96.5	103.5	111.0	118.5	128.5	136.0	146.0	156.1	8.50	18.70	2.21	12.29	15.12	19.49	27.61	10.80	13.19	16.78	23.05
1.0	1.0	1.0	1.0	1.1	1.1	1.1	1.1	1.1	1.1	1.1	1.1	1.1	1.1	1.2											
68.2	73.2	78.2	83.2	88.2	—	—	—	—	—	—	—	—	—	—	4.65	10.30	2.24	4.81	5.89	7.54	10.66	*	*	*	*
1.0	1.0	1.0	1.1	1.1	—	—	—	—	—	—	—	—	—	—	*	*									
63.9	68.9	74.0	79.0	84.0	—	—	—	—	—	—	—	—	—	—	6.30	14.00	2.24	8.06	9.91	12.76	18.16	*	*	*	*
1.0	1.0	1.0	1.1	1.1	—	—	—	—	—	—	—	—	—	—	*	*									
68.8	73.8	78.8	83.8	88.8	—	—	—	—	—	—	—	—	—	—	4.40	9.75	2.24	4.31	5.27	6.73	9.49	*	*	*	*
1.0	1.0	1.0	1.1	1.1	—	—	—	—	—	—	—	—	—	—	*	*									
67.5	72.5	77.5	82.5	87.5	—	—	—	—	—	—	—	—	—	—	4.90	10.90	2.25	5.31	6.50	8.34	11.81	*	*	*	*
1.0	1.0	1.0	1.1	1.1	—	—	—	—	—	—	—	—	—	—	*	*									
67.6	52.6	57.7	62.7	67.7	73.8	79.8	85.8	92.9	100.4	107.9	117.9	125.5	135.5	145.5	12.50	28.00	2.25	19.71	24.21	31.03	43.04	18.04	21.96	27.68	36.60
1.0	1.0	1.0	1.0	1.0	1.1	1.1	1.1	1.1	1.1	1.1	1.1	1.1	1.1	1.2											
64.9	69.9	74.9	79.9	84.9	—	—	—	—	—	—	—	—	—	—	5.90	13.20	2.26	7.28	8.94	11.51	16.37	*	*	*	*
1.0	1.0	1.0	1.1	1.1	—	—	—	—	—	—	—	—	—	—	*	*									
43.4	48.5	53.5	58.6	63.7	69.7	75.8	81.8	88.8	96.4	103.9	113.9	121.4	131.5	141.5	14.00	31.50	2.26	22.41	27.49	35.11	48.15	20.65	25.08	31.43	40.65
1.0	1.0	1.0	1.0	1.0	1.0	1.1	1.1	1.1	1.1	1.1	1.1	1.1	1.1	1.2											
61.7	66.7	71.7	76.7	81.7	87.7	93.8	99.8	106.8	114.3	121.8	131.8	139.3	149.3	159.3	7.10	16.00	2.27	9.61	11.82	15.24	21.67	8.17	9.96	12.67	17.49
1.0	1.0	1.0	1.1	1.1	1.1	1.1	1.1	1.1	1.1	1.1	1.1	1.1	1.2	1.2											
66.6	71.6	76.6	81.6	86.6	—	—	—	—	—	—	—	—	—	—	5.20	11.80	2.29	5.90	7.24	9.30	13.19	*	*	*	*
1.0	1.0	1.0	1.1	1.1	—	—	—	—	—	—	—	—	—	—	*	*									
65.8	70.8	75.8	80.8	85.8	—	—	—	—	—	—	—	—	—	—	5.50	12.50	2.30	6.50	7.97	10.25	14.56	*	*	*	*
1.0	1.0	1.0	1.1	1.1	—	—	—	—	—	—	—	—	—	—	*	*									
53.0	58.0	63.0	68.1	73.1	79.1	85.1	91.1	98.1	105.7	113.2	123.2	130.7	140.7	150.7	10.30	23.60	2.30	15.67	19.27	24.79	34.86	14.11	17.22	21.84	29.60
1.0	1.0	1.0	1.0	1.0	1.1	1.1	1.1	1.1	1.1	1.1	1.1	1.1	1.1	1.2											
55.8	60.8	65.8	70.8	75.8	81.9	87.9	93.9	100.9	108.4	115.9	125.9	133.5	143.5	153.5	9.25	21.20	2.31	13.70	16.86	21.72	30.69	12.19	14.88	18.92	25.86
1.0	1.0	1.0	1.0	1.0	1.1	1.1	1.1	1.1	1.1	1.1	1.1	1.1	1.1	1.2											
36.4	41.6	46.7	51.9	57.0	63.1	69.1	75.2	82.3	89.8	97.4	107.4	115.0	125.0	135.1	16.00	37.50	2.35	25.95	31.75	40.34	*	24.03	29.08	36.09	*
0.9	1.0	1.0	1.0	1.0	1.0	1.0	1.1	1.1	1.1	1.1	1.1	1.1	1.1	1.1											
58.8	63.8	68.8	73.8	78.8	84.9	90.9	96.9	103.9	111.4	118.9	128.9	136.4	146.4	156.4	8.00	18.70	2.35	11.34	13.95	17.98	25.52	9.86	12.04	15.33	21.11
1.0	1.0	1.0	1.0	1.0	1.1	1.1	1.1	1.1	1.1	1.1	1.1	1.1	1.1	1.2											
55.9	61.0	66.0	71.0	76.0	82.1	88.1	94.1	101.1	108.6	116.1	126.1	133.6	143.7	153.7	9.00	21.20	2.37	13.23	16.29	20.98	29.67	11.73	14..32	18.21	24.93
1.0	1.0	1.0	1.0	1.0	1.1	1.1	1.1	1.1	1.1	1.1	1.1	1.1	1.1	1.2											
68.4	73.4	78.4	83.4	88.4	—	—	—	—	—	—	—	—	—	—	4.40	10.30	2.37	4.31	5.27	6.73	9.49	*	*	*	*
1.0	1.0	1.0	1.1	1.1	—	—	—	—	—	—	—	—	—	—	*	*									
67.7	72.7	77.7	82.7	87.7	—	—	—	—	—	—	—	—	—	—	4.65	10.90	2.37	40.81	5.89	7.54	10.66	*	*	*	*
1.0	1.0	1.0	1.1	1.1	—	—	—	—	—	—	—	—	—	—	*	*									
48.1	53.1	58.2	63.2	68.3	74.3	80.3	86.4	93.4	100.9	108.4	118.5	126.0	136.0	146.0	11.80	28.00	2.38	18.43	22.66	29.08	40.53	16.80	20.48	25.87	34.50
1.0	1.0	1.0	1.0	1.0	1.1	1.1	1.1	1.1	1.1	1.1	1.1	1.1	1.1	1.2											

* = Diameters below RMA minimum for other than Cog-Belt V-belts. Use with Super Power-Wedge V-belts will result in reduced life and loss of efficiency.

⚠ **WARNING**** = Sheave Rim Speed in excess of 6500 feet per minute - see Page 236

Arc-Length Correction Factors are located beneath Center Distance Values

POWER-WEDGE PRE-ENGINEERED DRIVE SELECTION TABLES

5V/5VX PRE-ENGINEERED TABLES RATIO 2.40 - 2.67

Driven Speed for Motor Speed of				Sheave Outside Diameters		V-Belt Number and Center Distance (other sizes may be available, see page 214)																				
690 RPM	870 RPM	1160 RPM	1750 RPM	Small Sheave	Large Sheave	Speed Ratio	5VX 500	5VX 530	5VX 560	5VX 600	5VX 630	5VX 670	5VX 710	5VX 750	5VX 800	5VX 850	5VX 900	5VX 950	5VX 1000	5VX 1060	5VX 1120	5VX 1180	5VX 1250	5VX 1320	5VX 1400	5VX 1500
288	363	484	730	5.90	14.00	2.40	—	—	11.7	13.8	15.3	17.4	17.4	21.5	24.0	26.2	29.1	31.6	34.1	37.1	40.2	43.2	46.7	50.2	54.2	59.2
			*	*			—	—	0.8	0.8	0.8	0.8	0.9	0.9	0.9	0.9	0.9	0.9	0.9	0.9	1.0	1.0	1.0	1.0	1.0	1.0
288	363	484	730	13.20	31.50	2.40	—	—	—	—	—	—	—	—	—	—	—	—	—	—	—	—	25.8	29.5	33.6	38.8
							—	—	—	—	—	—	—	—	—	—	—	—	—	—	—	—	0.9	0.9	0.9	1.0
287	362	483	728	6.30	15.00	2.40	—	—	—	12.5	14.1	16.2	18.3	20.3	22.9	25.4	27.9	30.5	33.0	36.0	39.0	42.0	45.6	49.1	53.1	58.1
			*	*			—	—	—	0.8	0.8	0.8	0.8	0.9	0.9	0.9	0.9	0.9	0.9	0.9	1.0	1.0	1.0	1.0	1.0	1.0
286	361	482	726	6.70	16.00	2.41	—	—	—	—	—	14.9	17.0	19.1	21.7	24.2	26.8	29.3	31.8	34.9	37.9	40.9	44.4	47.9	52.0	57.0
			*	*			—	—	—	—	—	0.8	0.8	0.9	0.9	0.9	0.9	0.9	0.9	0.9	0.9	1.0	1.0	1.0	1.0	1.0
284	359	478	721	5.50	13.20	2.43	—	11.1	12.7	14.8	16.4	18.4	20.5	22.5	25.0	27.5	30.1	32.6	35.1	38.1	41.4	44.1	47.7	51.2	55.2	60.2
			*	*			—	0.8	0.8	0.8	0.8	0.8	0.9	0.9	0.9	0.9	0.9	0.9	0.9	0.9	1.0	1.0	1.0	1.0	1.0	1.0
284	358	477	720	5.20	12.50	2.43	10.5	12.0	13.6	15.7	17.2	19.3	21.3	23.3	25.8	28.4	30.9	33.4	35.9	38.9	41.9	45.0	48.5	52.0	56.0	61.0
			*	*			0.8	0.8	0.8	0.8	0.8	0.9	0.9	0.9	0.9	0.9	0.9	0.9	0.9	0.9	1.0	1.0	1.0	1.0	1.0	1.0
283	357	476	719	9.75	23.60	2.44	—	—	—	—	—	—	—	—	—	—	—	20.1	22.8	25.9	29.0	32.1	35.6	39.2	43.3	48.3
							—	—	—	—	—	—	—	—	—	—	—	0.9	0.9	0.9	0.9	0.9	0.9	1.0	1.0	1.0
283	357	476	718	4.90	11.80	2.44	11.4	12.9	14.5	16.5	18.1	20.1	22.1	24.1	26.7	29.2	31.7	34.2	36.7	39.7	42.7	45.8	49.3	52.8	56.8	61.8
			*	*			0.8	0.8	0.8	0.8	0.8	0.9	0.9	0.9	0.9	0.9	0.9	0.9	0.9	1.0	1.0	1.0	1.0	1.0	1.0	1.0
280	353	471	711	4.65	11.30	2.46	12.0	13.6	15.1	17.2	18.7	20.7	22.7	24.7	27.3	29.8	32.3	34.8	37.3	40.3	43.3	46.4	49.9	53.4	57.4	62.4
			*	*			0.8	0.8	0.8	0.8	0.8	0.9	0.9	0.9	0.9	0.9	0.9	0.9	0.9	1.0	1.0	1.0	1.0	1.0	1.0	1.0
277	349	466	703	11.30	28.00	2.49	—	—	—	—	—	—	—	—	—	—	—	—	—	—	23.7	26.8	30.5	34.1	38.2	43.3
							—	—	—	—	—	—	—	—	—	—	—	—	—	—	0.9	0.9	0.9	0.9	1.0	1.0
275	347	462	697	15.00	37.50	2.51	—	—	—	—	—	—	—	—	—	—	—	—	—	—	—	—	—	—	—	31.8
							—	—	—	—	—	—	—	—	—	—	—	—	—	—	—	—	—	—	—	0.9
275	346	462	697	4.40	10.90	2.51	12.6	14.1	15.6	17.7	19.2	21.2	23.3	25.3	27.8	30.3	32.8	35.3	37.8	40.9	43.9	46.9	50.4	53.9	57.9	62.9
			*	*			0.8	0.8	0.8	0.8	0.8	0.9	0.9	0.9	0.9	0.9	0.9	0.9	0.9	1.0	1.0	1.0	1.0	1.0	1.0	1.0
275	346	462	697	8.50	21.20	2.51	—	—	—	—	—	—	—	—	—	18.1	20.7	23.3	25.9	29.0	32.0	35.1	38.7	42.2	46.2	51.3
							—	—	—	—	—	—	—	—	—	0.8	0.9	0.9	0.9	0.9	0.9	0.9	1.0	1.0	1.0	1.0
275	346	462	696	7.50	18.70	2.51	—	—	—	—	—	—	—	15.9	18.6	21.2	23.8	26.3	28.9	31.9	35.0	38.0	41.5	45.1	49.1	54.1
							—	—	—	—	—	—	—	0.8	0.8	0.9	0.9	0.9	0.9	0.9	0.9	1.0	1.0	1.0	1.0	1.0
272	344	458	691	12.50	31.50	2.53	—	—	—	—	—	—	—	—	—	—	—	—	—	—	—	—	26.2	29.9	34.1	39.3
							—	—	—	—	—	—	—	—	—	—	—	—	—	—	—	—	0.9	0.9	0.9	1.0
269	339	452	682	6.30	16.00	2.56	—	—	—	—	13.1	15.2	17.3	19.4	21.9	24.5	27.1	29.6	32.1	35.2	38.2	41.2	44.7	48.2	52.3	57.3
			*	*			—	—	—	—	0.8	0.8	0.8	0.8	0.9	0.9	0.9	0.9	0.9	0.9	0.9	1.0	1.0	1.0	1.0	1.0
269	339	452	681	9.25	23.60	2.57	—	—	—	—	—	—	—	—	—	—	—	20.4	23.1	26.2	29.3	32.4	36.0	39.5	43.6	48.7
							—	—	—	—	—	—	—	—	—	—	—	0.8	0.9	0.9	0.9	0.9	0.9	1.0	1.0	1.0
269	339	452	681	5.20	13.20	2.57	—	11.3	12.9	15.0	16.6	18.6	20.7	22.7	25.2	27.8	30.3	32.8	35.3	38.3	41.4	44.4	47.9	51.4	55.4	60.4
			*	*			—	0.8	0.8	0.8	0.8	0.8	0.9	0.9	0.9	0.9	0.9	0.9	0.9	0.9	1.0	1.0	1.0	1.0	1.0	1.0
269	339	452	681	5.90	15.00	2.57	—	—	—	12.8	14.4	16.5	18.5	20.6	23.1	25.7	28.2	30.7	33.3	36.3	39.3	42.3	45.9	49.4	53.4	48.4
			*	*			—	—	—	0.8	0.8	0.8	0.8	0.9	0.9	0.9	0.9	0.9	0.9	0.9	1.0	1.0	1.0	1.0	1.0	1.0
268	338	451	681	4.65	11.80	2.57	11.5	13.1	14.6	16.7	18.2	20.3	22.3	24.3	26.8	29.4	31.9	34.4	36.9	39.9	42.9	45.9	49.5	53.0	57.0	62.0
			*	*			0.8	0.8	0.8	0.8	0.8	0.9	0.9	0.9	0.9	0.9	0.9	0.9	0.9	0.9	1.0	1.0	1.0	1.0	1.0	1.0
268	338	451	680	5.50	14.00	2.57	—	—	11.9	14.0	15.6	17.7	19.7	21.8	24.3	26.8	29.4	31.9	34.4	37.4	40.5	43.5	47.0	50.5	54.5	59.5
			*	*			—	—	0.8	0.8	0.8	0.8	0.9	0.9	0.9	0.9	0.9	0.9	0.9	0.9	1.0	1.0	1.0	1.0	1.0	1.0
267	337	449	677	4.90	12.50	2.58	10.7	12.2	13.8	15.9	17.4	19.5	21.5	23.5	26.1	28.6	31.1	33.6	36.1	39.1	42.2	45.2	48.7	52.5	56.2	61.2
			*	*			0.8	0.8	0.8	0.8	0.8	0.8	0.9	0.9	0.9	0.9	0.9	0.9	0.9	0.9	1.0	1.0	1.0	1.0	1.0	1.0
267	337	449	677	10.90	28.00	2.58	—	—	—	—	—	—	—	—	—	—	—	—	—	—	23.9	27.1	30.8	34.4	38.5	43.6
							—	—	—	—	—	—	—	—	—	—	—	—	—	—	0.9	0.9	0.9	0.9	1.0	1.0
265	334	445	672	4.40	11.30	2.60	12.2	13.7	15.3	17.3	18.9	20.9	22.9	24.9	27.5	30.0	32.5	35.0	37.5	40.5	43.5	46.5	50.1	53.6	57.6	62.6
			*	*			0.8	0.8	0.8	0.8	0.8	0.9	0.9	0.9	0.9	0.9	0.9	0.9	0.9	1.0	1.0	1.0	1.0	1.0	1.0	1.0
261	329	439	663	9.00	23.60	2.64	—	—	—	—	—	—	—	—	—	—	17.9	20.6	23.2	26.4	29.5	32.6	36.2	39.7	43.8	48.9
							—	—	—	—	—	—	—	—	—	—	0.8	0.8	0.9	0.9	0.9	0.9	0.9	1.0	1.0	1.0
260	327	437	659	7.10	18.70	2.66	—	—	—	—	—	—	—	16.2	18.8	21.5	24.0	26.6	29.2	32.2	35.3	38.3	41.8	45.4	49.4	54.4
							—	—	—	—	—	—	—	0.8	0.8	0.9	0.9	0.9	0.9	0.9	0.9	0.9	1.0	1.0	1.0	1.0
258	326	434	655	8.00	21.20	2.67	—	—	—	—	—	—	—	—	—	18.4	21.0	23.6	26.2	29.3	32.4	35.5	39.0	42.6	46.6	51.6
							—	—	—	—	—	—	—	—	—	0.8	0.9	0.9	0.9	0.9	0.9	0.9	1.0	1.0	1.0	1.0

* = Diameters below RMA minimum for other than Cog-Belt V-belts. Use with Super Power-Wedge V-belts will result in reduced life and loss of efficiency.

⚠ **WARNING**** = Sheave Rim Speed in excess of 6500 feet per minute - see Page 236

Arc-Length Correction Factors are located beneath Center Distance Values

POWER-WEDGE PRE-ENGINEERED DRIVE SELECTION TABLES

5V/5VX PRE-ENGINEERED TABLES — RATIO 2.40 - 2.67

V-Belt Number and Center Distance (Other sizes may be available, see page 214)																		Rated HP per Belt (Includes Added HP for Speed Ratio) Power-Wedge Cog-Belt (5VX) RPM of Small Sheave				Rated HP per Belt (Includes Added HP for Speed Ratio) Super Power-Wedge Belt (5V) RPM of Small Sheave			
5VX 1600	5VX 1700	5VX 1800	5VX 1900	5VX 2000	5V 2120	5V 2240	5V 2360	5V 2500	5V 2650	5V 2800	5V 3000	5V 3150	5V 3350	5V 3550	Small Sheave	Large Sheave	Speed Ratio	690 RPM	870 RPM	1160 RPM	1750 RPM	690 RPM	870 RPM	1160 RPM	1170 RPM
64.2	69.3	74.3	79.3	84.3	—	—	—	—	—	—	—	—	—	—	5.90	14.00	2.40	7.28	8.94	11.51	16.37	*	*	*	*
1.0	1.0	1.0	1.1	1.1	—	—	—	—	—	—	—	—	—	—	*	*									
43.9	49.0	54.1	59.2	64.2	70.3	76.3	82.4	89.4	97.0	104.5	114.5	122.0	132.1	142.1	13.20	31.50	2.40	20.98	25.75	32.95	45.48	19.26	23.43	29.46	38.56
1.0	1.0	1.0	1.0	1.0	1.0	1.1	1.1	1.1	1.1	1.1	1.1	1.1	1.1	1.1											
63.1	68.1	73.1	78.1	83.2	—	—	—	—	—	—	—	—	—	—	6.30	15.00	2.40	8.06	9.91	12.76	18.16	*	*	*	*
1.0	1.0	1.0	1.1	1.1	—	—	—	—	—	—	—	—	—	—	*	*									
62.0	67.0	72.0	77.0	82.0	—	—	—	—	—	—	—	—	—	—	6.70	16.00	2.41	8.84	10.87	14.01	19.92	*	*	*	*
1.0	1.0	1.0	1.1	1.1	—	—	—	—	—	—	—	—	—	—	*	*									
65.2	70.2	75.2	80.2	85.2	—	—	—	—	—	—	—	—	—	—	5.50	13.20	2.43	6.50	7.97	10.25	14.56	*	*	*	*
1.0	1.0	1.0	1.1	1.1	—	—	—	—	—	—	—	—	—	—	*	*									
66.0	71.0	76.0	81.0	86.0	—	—	—	—	—	—	—	—	—	—	5.20	12.50	2.43	5.90	7.24	9.30	13.19	*	*	*	*
1.0	1.0	1.0	1.1	1.1	—	—	—	—	—	—	—	—	—	—	*	*									
53.4	58.4	63.4	68.4	73.5	79.5	85.5	91.5	98.6	106.1	113.6	123.6	131.1	141.1	151.1	9.75	23.60	2.44	14.64	18.02	23.19	32.70	13.10	16.00	20.32	27.67
1.0	1.0	1.0	1.0	1.0	1.1	1.1	1.1	1.1	1.1	1.1	1.1	1.1	1.1	1.2											
66.8	71.8	76.8	81.8	86.8	—	—	—	—	—	—	—	—	—	—	4.90	11.80	2.44	5.31	6.50	8.34	11.81	*	*	*	*
1.0	1.0	1.0	1.1	1.1	—	—	—	—	—	—	—	—	—	—	*	*									
67.4	72.4	77.4	82.4	87.4	—	—	—	—	—	—	—	—	—	—	4.65	11.30	2.46	4.81	5.89	7.54	10.66	*	*	*	*
1.0	1.0	1.0	1.1	1.1	—	—	—	—	—	—	—	—	—	—	*	*									
48.4	53.5	58.5	63.6	68.6	74.7	80.7	86.7	93.8	101.3	108.8	118.8	126.4	136.4	146.4	11.30	28.00	2.49	17.52	21.54	27.66	38.68	15.91	19.40	24.55	32.93
1.0	1.0	1.0	1.0	1.0	1.1	1.1	1.1	1.1	1.1	1.1	1.1	1.1	1.1	1.2											
37.1	42.3	47.4	52.6	57.7	63.8	69.9	75.9	83.0	90.6	98.1	108.2	115.7	125.8	135.8	15.00	37.50	2.51	24.19	29.64	37.76	**	22.35	27.10	33.81	**
0.9	1.0	1.0	1.0	1.0	1.0	1.0	1.1	1.1	1.1	1.1	1.1	1.1	1.1	1.1											
67.9	72.9	77.9	82.9	87.9	—	—	—	—	—	—	—	—	—	—	4.40	10.90	2.51	4.31	5.27	6.73	9.49	*	*	*	*
1.0	1.0	1.0	1.1	1.1	—	—	—	—	—	—	—	—	—	—	*	*									
56.3	61.3	66.4	71.4	76.4	82.4	88.4	94.5	101.5	109.0	116.5	126.5	134.0	144.0	154.0	8.50	21.20	2.51	12.29	15.12	19.49	27.61	10.80	13.19	16.78	23.05
1.0	1.0	1.0	1.0	1.1	1.1	1.1	1.1	1.1	1.1	1.1	1.1	1.1	1.1	1.2											
59.2	64.2	69.2	74.2	79.2	85.2	91.3	97.3	104.3	111.8	119.3	129.3	136.8	146.8	156.8	7.50	18.70	2.51	10.38	12.77	16.47	23.39	8.92	10.89	13.86	19.12
1.0	1.0	1.0	1.0	1.1	1.1	1.1	1.1	1.1	1.1	1.1	1.1	1.1	1.1	1.2											
44.4	49.5	54.6	59.7	64.7	70.8	76.9	82.9	89.9	97.5	105.0	115.1	122.6	132.6	142.6	12.50	31.50	2.53	19.71	24.21	31.03	43.04	18.04	21.96	27.68	36.60
1.0	1.0	1.0	1.0	1.0	1.0	1.1	1.1	1.1	1.1	1.1	1.1	1.1	1.1	1.1											
62.3	67.3	72.3	77.3	82.3	—	—	—	—	—	—	—	—	—	—	6.30	16.00	2.56	8.06	9.91	12.76	18.16	*	*	*	*
1.0	1.0	1.0	1.1	1.1	—	—	—	—	—	—	—	—	—	—	*	*									
53.7	58.8	63.8	68.8	73.9	79.9	85.9	91.9	98.9	106.5	114.0	124.0	131.5	141.5	151.5	9.25	23.60	2.57	13.70	16.86	21.72	30.69	12.19	14.88	18.92	25.86
1.0	1.0	1.0	1.0	1.0	1.1	1.1	1.1	1.1	1.1	1.1	1.1	1.1	1.1	1.2											
65.4	70.4	75.4	80.4	85.5	—	—	—	—	—	—	—	—	—	—	5.20	13.20	2.57	5.90	7.24	9.30	13.19	*	*	*	*
1.0	1.0	1.0	1.1	1.1	—	—	—	—	—	—	—	—	—	—	*	*									
63.4	68.4	73.4	78.5	83.5	—	—	—	—	—	—	—	—	—	—	5.90	15.00	2.57	7.28	8.94	11.51	16.37	*	*	*	*
1.0	1.0	1.0	1.1	1.1	—	—	—	—	—	—	—	—	—	—	*	*									
67.0	72.0	77.0	82.0	87.0	—	—	—	—	—	—	—	—	—	—	4.65	11.80	2.57	4.81	5.89	7.54	10.66	*	*	*	*
1.0	1.0	1.0	1.1	1.1	—	—	—	—	—	—	—	—	—	—	*	*									
64.5	69.6	74.6	79.6	84.6	—	—	—	—	—	—	—	—	—	—	5.50	14.00	2.57	6.50	7.97	10.25	14.56	*	*	*	*
1.0	1.0	1.0	1.1	1.1	—	—	—	—	—	—	—	—	—	—	*	*									
66.2	71.2	76.2	81.2	86.3	—	—	—	—	—	—	—	—	—	—	4.90	12.50	2.58	5.31	6.50	8.34	11.81	*	*	*	*
1.0	1.0	1.0	1.1	1.1	—	—	—	—	—	—	—	—	—	—	*	*									
48.7	53.8	58.8	63.9	68.9	75.0	81.0	87.0	94.1	101.6	109.1	119.1	126.7	136.7	146.7	10.90	28.00	2.58	16.78	20.64	26.52	37.17	15.19	18.53	23.48	31.62
1.0	1.0	1.0	1.0	1.0	1.1	1.1	1.1	1.1	1.1	1.1	1.1	1.1	1.1	1.2											
67.6	72.6	77.6	82.6	87.6	—	—	—	—	—	—	—	—	—	—	4.40	11.30	2.60	4.31	5.27	6.73	9.49	*	*	*	*
1.0	1.0	1.0	1.1	1.1	—	—	—	—	—	—	—	—	—	—	*	*									
53.9	58.9	64.0	69.0	74.0	80.1	86.1	92.1	99.1	106.6	114.2	124.2	131.7	141.7	151.7	9.00	23.60	2.64	13.23	16.29	20.98	29.67	11.73	14.32	18.21	24.93
1.0	1.0	1.0	1.0	1.0	1.1	1.1	1.1	1.1	1.1	1.1	1.1	1.1	1.1	1.2											
59.5	64.5	69.5	74.5	79.5	85.5	91.6	97.6	104.6	112.1	119.6	129.6	137.1	147.1	157.1	7.10	18.70	2.66	9.61	11.82	15.24	21.67	8.17	9.96	12.67	17.49
1.0	1.0	1.0	1.0	1.1	1.1	1.1	1.1	1.1	1.1	1.1	1.1	1.1	1.1	1.2											
56.7	61.7	66.7	71.8	76.8	82.8	88.8	94.8	101.9	109.4	116.9	126.9	134.4	144.4	154.4	8.00	21.20	2.67	11.34	13.95	17.98	25.52	9.86	12.04	15.33	21.11
1.0	1.0	1.0	1.0	1.1	1.1	1.1	1.1	1.1	1.1	1.1	1.1	1.1	1.1	1.2											

* = Diameters below RMA minimum for other than Cog-Belt V-belts. Use with Super Power-Wedge V-belts will result in reduced life and loss of efficiency.

⚠ **WARNING**** = Sheave Rim Speed in excess of 6500 feet per minute - see Page 236

Arc-Length Correction Factors are located beneath Center Distance Values

POWER-WEDGE PRE-ENGINEERED DRIVE SELECTION TABLES

5V/5VX PRE-ENGINEERED TABLES RATIO 2.68 - 3.05

Driven Speed for Motor Speed of				Sheave Outside Diameters		V-Belt Number and Center Distance (other sizes may be available, see page 214)																				
690 RPM	870 RPM	1160 RPM	1750 RPM	Small Sheave	Large Sheave	Speed Ratio	5VX 500	5VX 530	5VX 560	5VX 600	5VX 630	5VX 670	5VX 710	5VX 750	5VX 800	5VX 850	5VX 900	5VX 950	5VX 1000	5VX 1060	5VX 1120	5VX 1180	5VX 1250	5VX 1320	5VX 1400	5VX 1500
257	324	432	652	11.80	31.50	2.68	—	—	—	—	—	—	—	—	—	—	—	—	—	—	—	—	26.7	30.4	34.6	39.8
							—	—	—	—	—	—	—	—	—	—	—	—	—	—	—	—	0.9	0.9	0.9	1.0
256	323	431	650	14.00	37.50	2.69	—	—	—	—	—	—	—	—	—	—	—	—	—	—	—	—	—	—	—	32.4
							—	—	—	—	—	—	—	—	—	—	—	—	—	—	—	—	—	—	—	0.9
254	320	426	643	4.40	11.80	2.72	11.7	13.3	14.8	16.9	18.4	20.4	22.5	24.5	27.0	29.5	32.1	34.6	37.1	40.1	43.1	46.1	49.6	53.1	57.2	62.2
			*	*			0.8	0.8	0.8	0.8	0.8	0.9	0.9	0.9	0.9	0.9	0.9	0.9	0.9	0.9	1.0	1.0	1.0	1.0	1.0	1.0
253	319	426	642	4.65	12.50	2.73	10.8	12.4	14.0	16.1	17.6	19.6	21.7	23.7	26.2	28.8	31.3	33.8	36.3	39.3	42.3	45.4	48.9	52.4	56.4	61.4
			*	*			0.8	0.8	0.8	0.8	0.8	0.9	0.9	0.9	0.9	0.9	0.9	0.9	0.9	0.9	1.0	1.0	1.0	1.0	1.0	1.0
253	319	426	642	5.20	14.00	2.73	—	—	12.1	14.2	15.8	17.9	19.9	22.0	24.5	27.1	29.6	32.1	34.6	37.7	40.7	43.7	47.2	50.7	54.7	59.8
			*	*			—	—	0.8	0.8	0.8	0.8	0.9	0.9	0.9	0.9	0.9	0.9	0.9	0.9	1.0	1.0	1.0	1.0	1.0	1.0
253	319	425	641	4.90	13.20	2.73	—	11.5	13.1	15.2	16.8	18.8	20.9	22.9	25.4	28.0	30.5	33.0	35.5	38.6	41.6	44.6	48.1	51.6	55.6	60.6
			*	*			—	0.8	0.8	0.8	0.8	0.8	0.9	0.9	0.9	0.9	0.9	0.9	0.9	0.9	1.0	1.0	1.0	1.0	1.0	1.0
252	318	424	640	10.30	28.00	2.74	—	—	—	—	—	—	—	—	—	—	—	—	—	21.1	24.3	27.5	31.2	34.8	38.9	44.0
							—	—	—	—	—	—	—	—	—	—	—	—	—	0.8	0.9	0.9	0.9	0.9	1.0	1.0
252	317	423	638	5.90	16.00	2.74	—	—	—	—	13.3	15.5	17.6	19.7	22.2	24.8	27.3	29.9	32.4	35.4	38.5	41.5	45.0	48.5	52.6	57.6
			*	*			—	—	—	—	0.8	0.8	0.8	0.8	0.9	0.9	0.9	0.9	0.9	0.9	0.9	1.0	1.0	1.0	1.0	1.0
250	315	420	634	5.50	15.00	2.76	—	—	—	13.0	14.6	16.7	18.8	20.9	23.4	26.0	28.5	31.0	33.6	36.6	39.6	42.6	46.2	49.7	53.7	58.7
			*	*			—	—	—	.08	0.8	0.8	0.8	0.9	0.9	0.9	0.9	0.9	0.9	0.9	1.0	1.0	1.0	1.0	1.0	1.0
247	311	415	626	8.50	23.60	2.80	—	—	—	—	—	—	—	—	—	—	18.2	20.9	23.6	26.7	29.8	32.9	36.5	40.1	44.1	49.2
							—	—	—	—	—	—	—	—	—	—	0.8	0.8	0.9	0.9	0.9	0.9	0.9	1.0	1.0	1.0
246	310	414	624	11.30	31.50	2.80	—	—	—	—	—	—	—	—	—	—	—	—	—	—	—	23.2	27.0	30.7	34.9	40.1
							—	—	—	—	—	—	—	—	—	—	—	—	—	—	—	0.8	0.9	0.9	0.9	1.0
245	309	412	621	6.70	18.70	2.82	—	—	—	—	—	—	14.3	16.5	19.1	21.7	24.3	26.9	29.4	32.5	35.5	38.6	42.1	45.7	49.7	54.7
			*	*			—	—	—	—	—	—	0.8	0.8	0.8	0.9	0.9	0.9	0.9	0.9	0.9	0.9	1.0	1.0	1.0	1.0
242	305	407	614	7.50	21.20	2.85	—	—	—	—	—	—	—	—	16.0	18.7	21.4	24.0	26.6	29.7	32.7	35.8	39.4	42.9	47.0	52.0
							—	—	—	—	—	—	—	—	0.8	0.8	0.9	0.9	0.9	0.9	0.9	0.9	1.0	1.0	1.0	1.0
242	305	406	613	13.20	37.50	2.85	—	—	—	—	—	—	—	—	—	—	—	—	—	—	—	—	—	—	27.5	32.9
							—	—	—	—	—	—	—	—	—	—	—	—	—	—	—	—	—	—	0.9	0.9
240	302	403	608	4.65	13.20	2.88	—	11.7	13.3	15.4	16.9	19.0	21.0	23.1	25.6	28.2	30.7	33.2	35.7	38.7	41.8	44.8	48.3	51.8	55.8	60.8
			*	*			—	0.8	0.8	0.8	0.8	0.8	0.9	0.9	0.9	0.9	0.9	0.9	0.9	0.9	1.0	1.0	1.0	1.0	1.0	1.0
239	302	402	607	4.40	12.50	2.88	11.0	12.6	14.1	16.2	17.8	19.8	21.9	23.9	26.4	28.9	31.5	34.0	36.5	39.5	42.5	45.5	49.1	52.6	56.6	61.6
			*	*			0.8	0.8	0.8	0.8	0.8	0.8	0.9	0.9	0.9	0.9	0.9	0.9	0.9	0.9	1.0	1.0	1.0	1.0	1.0	1.0
239	301	401	605	9.75	28.00	2.89	—	—	—	—	—	—	—	—	—	—	—	—	—	21.4	24.7	27.9	31.5	35.2	39.3	44.4
							—	—	—	—	—	—	—	—	—	—	—	—	—	0.8	0.9	0.9	0.9	0.9	0.9	1.0
238	300	401	604	4.90	14.00	2.90	—	—	12.3	14.4	16.0	18.1	20.1	22.2	24.7	27.3	29.8	32.3	34.9	37.9	40.9	43.9	47.4	51.0	55.0	60.
			*	*			—	—	0.8	0.8	0.8	0.8	0.9	0.9	0.9	0.9	0.9	0.9	0.9	0.9	1.0	1.0	1.0	1.0	1.0	1.0
237	299	399	602	10.90	31.50	2.91	—	—	—	—	—	—	—	—	—	—	—	—	—	—	—	23.4	27.3	31.0	35.2	40.4
							—	—	—	—	—	—	—	—	—	—	—	—	—	—	—	0.8	0.9	0.9	0.9	1.0
236	298	397	599	5.20	15.00	2.92	—	—	—	13.2	14.8	16.9	19.0	21.1	23.6	26.2	28.7	31.3	33.8	36.8	39.8	42.9	46.4	49.9	53.9	58.9
			*	*			—	—	—	0.8	0.8	0.8	0.8	0.9	0.9	0.9	0.9	0.9	0.9	0.9	0.9	1.0	1.0	1.0	1.0	1.0
234	295	394	594	5.50	16.00	2.94	—	—	—	—	13.6	15.7	17.8	19.9	22.5	25.1	27.6	30.2	32.7	35.7	38.8	41.8	45.3	48.8	52.9	57.9
			*	*			—	—	—	—	0.8	0.8	0.8	0.8	0.9	0.9	0.9	0.9	0.9	0.9	0.9	1.0	1.0	1.0	1.0	1.0
232	292	390	588	8.00	23.60	2.97	—	—	—	—	—	—	—	—	—	—	18.5	21.2	23.9	27.1	30.2	33.3	36.9	40.4	44.5	49.6
							—	—	—	—	—	—	—	—	—	—	0.8	0.8	0.9	0.9	0.9	0.9	0.9	1.0	1.0	1.0
230	290	387	583	6.30	18.70	3.00	—	—	—	—	—	—	14.5	16.7	19.4	22.0	24.6	27.2	29.7	32.8	35.8	38.9	42.4	45.9	50.0	55.0
			*	*			—	—	—	—	—	—	0.8	0.8	0.8	0.9	0.9	0.9	0.9	0.9	0.9	0.9	1.0	1.0	1.0	1.0
229	289	385	581	7.10	21.20	3.01	—	—	—	—	—	—	—	—	16.2	19.0	21.6	24.2	26.8	29.9	33.0	36.1	39.6	43.2	47.2	52.3
							—	—	—	—	—	—	—	—	0.8	0.8	0.9	0.9	0.9	0.9	0.9	0.9	0.9	1.0	1.0	1.0
229	288	385	580	12.50	37.50	3.02	—	—	—	—	—	—	—	—	—	—	—	—	—	—	—	—	—	—	27.9	33.4
							—	—	—	—	—	—	—	—	—	—	—	—	—	—	—	—	—	—	0.9	0.9
226	286	381	574	4.40	13.20	3.05	—	11.9	13.5	15.6	17.1	19.2	21.2	23.3	25.8	28.3	30.9	33.4	35.9	38.9	41.9	45.0	48.5	52.0	56.0	61.0
			*	*			—	0.8	0.8	0.8	0.8	0.8	0.9	0.9	0.9	0.9	0.9	0.9	0.9	0.9	1.0	1.0	1.0	1.0	1.0	1.0
226	285	380	574	9.25	28.00	3.05	—	—	—	—	—	—	—	—	—	—	—	—	—	21.7	25.0	28.2	31.9	35.5	39.6	44.8
							—	—	—	—	—	—	—	—	—	—	—	—	—	0.8	0.9	0.9	0.9	0.9	0.9	1.0
226	285	380	573	4.65	14.00	3.05	—	10.8	12.5	14.6	16.2	18.3	20.3	22.4	24.9	27.5	30.0	32.5	35.0	38.1	41.1	44.1	47.6	51.1	55.2	60.2
			*	*			—	0.7	0.8	0.8	0.8	0.8	0.8	0.9	0.9	0.9	0.9	0.9	0.9	0.9	1.0	1.0	1.0	1.0	1.0	1.0

* = Diameters below RMA minimum for other than Cog-Belt V-belts. Use with Super Power-Wedge V-belts will result in reduced life and loss of efficiency.

⚠ **WARNING**** = Sheave Rim Speed in excess of 6500 feet per minute - see Page 236

Arc-Length Correction Factors are located beneath Center Distance Values

POWER-WEDGE PRE-ENGINEERED DRIVE SELECTION TABLES

5V/5VX PRE-ENGINEERED TABLES — RATIO 2.68 - 3.05

V-Belt Number and Center Distance (Other sizes may be available, see page 214)																		Rated HP per Belt (Includes Added HP for Speed Ratio) Power-Wedge Cog-Belt (5VX) RPM of Small Sheave				Rated HP per Belt (Includes Added HP for Speed Ratio) Super Power-Wedge Belt (5V) RPM of Small Sheave			
5VX 1600	5VX 1700	5VX 1800	5VX 1900	5VX 2000	5V 2120	5V 2240	5V 2360	5V 2500	5V 2650	5V 2800	5V 3000	5V 3150	5V 3350	5V 3550	Small Sheave	Large Sheave	Speed Ratio	690 RPM	870 RPM	1160 RPM	1750 RPM	690 RPM	870 RPM	1160 RPM	1170 RPM
44.9	50.0	55.1	60.2	65.2	71.3	77.4	83.4	90.5	98.0	105.5	115.6	123.1	133.1	143.2	11.80	31.50	2.68	18.43	22.66	29.08	40.53	16.80	20.48	25.87	34.50
1.0	1.0	1.0	1.0	1.0	1.0	1.1	1.1	1.1	1.1	1.1	1.1	1.1	1.1	1.1											
37.7	42.9	48.1	53.3	58.4	64.5	70.6	76.7	83.7	91.3	98.9	108.9	116.5	126.5	136.5	14.00	37.50	2.69	22.41	27.49	35.11	48.15	20.65	25.08	31.43	40.65
0.9	1.0	1.0	1.0	1.0	1.0	1.0	1.1	1.1	1.1	1.1	1.1	1.1	1.1	1.1											
67.2	72.2	77.2	82.2	87.2	—	—	—	—	—	—	—	—	—	—	4.40	11.80	2.72	4.31	5.27	6.73	9.49	*	*	*	*
1.0	1.0	1.0	1.1	1.1	—	—	—	—	—	—	—	—	—	—											
66.4	71.4	76.4	81.4	86.4	—	—	—	—	—	—	—	—	—	—	4.65	12.50	2.73	4.81	5.89	7.54	10.68	*	*	*	*
1.0	1.0	1.0	1.1	1.1	—	—	—	—	—	—	—	—	—	—											
64.8	69.8	74.8	79.8	84.8	—	—	—	—	—	—	—	—	—	—	5.20	14.00	2.73	5.90	7.24	9.30	13.19	*	*	*	*
1.0	1.0	1.0	1.1	1.1	—	—	—	—	—	—	—	—	—	—											
65.7	70.7	75.7	80.7	85.7	—	—	—	—	—	—	—	—	—	—	4.90	13.20	2.73	5.31	6.50	8.34	11.81	*	*	*	*
1.0	1.0	1.0	1.1	1.1	—	—	—	—	—	—	—	—	—	—											
49.1	54.2	59.3	64.3	69.4	75.4	81.4	87.5	94.5	102.0	109.6	119.6	127.1	137.1	147.2	10.30	28.00	2.74	15.67	19.27	24.79	34.86	14.11	17.22	21.84	29.60
1.0	1.0	1.0	1.0	1.0	1.1	1.1	1.1	1.1	1.1	1.1	1.1	1.1	1.1	1.2											
62.6	67.6	72.6	77.6	82.6	—	—	—	—	—	—	—	—	—	—	5.90	16.00	2.74	7.28	8.94	11.51	16.37	*	*	*	*
1.0	1.0	1.0	1.0	1.1	—	—	—	—	—	—	—	—	—	—											
63.7	68.7	73.7	78.8	83.8	—	—	—	—	—	—	—	—	—	—	5.50	15.00	2.76	6.50	7.97	10.25	14.56	*	*	*	*
1.0	1.0	1.0	1.1	1.1	—	—	—	—	—	—	—	—	—	—											
54.3	59.3	64.3	69.4	74.4	80.4	86.5	92.5	99.5	107.0	114.5	124.6	132.1	142.1	152.1	8.50	23.60	2.80	12.29	15.12	19.49	27.61	10.80	13.19	16.78	23.05
1.0	1.0	1.0	1.0	1.0	1.1	1.1	1.1	1.1	1.1	1.1	1.1	1.1	1.1	1.2											
45.3	50.4	55.5	60.5	65.6	71.7	77.7	83.8	90.8	98.4	105.9	115.9	123.5	133.5	143.5	11.30	31.50	2.80	17.52	21.54	27.66	38.68	15.91	19.40	24.55	32.93
1.0	1.0	1.0	1.0	1.0	1.0	1.1	1.1	1.1	1.1	1.1	1.1	1.1	1.1	1.1											
59.7	64.8	69.8	74.8	79.8	—	—	—	—	—	—	—	—	—	—	6.70	18.70	2.82	8.84	10.87	14.01	19.92	*	*	*	*
1.0	1.0	1.0	1.0	1.1	—	—	—	—	—	—	—	—	—	—											
57.0	62.1	67.1	72.1	77.2	83.2	89.2	95.2	102.2	109.7	117.3	127.3	134.8	144.8	154.8	7.50	21.20	2.85	10.38	12.77	16.47	23.39	8.92	10.89	13.86	19.12
1.0	1.0	1.0	1.0	1.1	1.1	1.1	1.1	1.1	1.1	1.1	1.1	1.1	1.1	1.2											
38.3	43.5	48.7	53.8	58.9	65.0	71.1	77.2	84.3	91.9	99.4	109.5	117.0	127.1	137.1	13.20	37.50	2.85	20.98	25.75	32.95	45.48	19.26	23.43	29.46	38.56
0.9	1.0	1.0	1.0	1.0	1.0	1.0	1.1	1.1	1.1	1.1	1.1	1.1	1.1	1.1											
65.8	70.9	75.9	80.9	85.9	—	—	—	—	—	—	—	—	—	—	4.65	13.20	2.88	4.81	5.89	7.54	10.68	*	*	*	*
1.0	1.0	1.0	1.1	1.1	—	—	—	—	—	—	—	—	—	—	*	*									
66.6	71.6	76.6	81.6	86.6	—	—	—	—	—	—	—	—	—	—	4.40	12.50	2.88	4.31	5.27	6.73	9.49	*	*	*	*
1.0	1.0	1.0	1.1	1.1	—	—	—	—	—	—	—	—	—	—	*	*									
49.5	54.6	59.7	64.7	69.8	75.8	81.8	87.9	94.9	102.4	110.0	120.0	127.5	137.5	147.6	9.75	28.00	2.89	14.64	18.02	23.19	32.70	13.10	16.00	20.32	27.67
1.0	1.0	1.0	1.0	1.0	1.0	1.1	1.1	1.1	1.1	1.1	1.1	1.1	1.1	1.2											
65.0	70.0	75.0	80.0	85.0	—	—	—	—	—	—	—	—	—	—	4.90	14.00	2.90	5.31	6.50	8.34	11.81	*	*	*	*
1.0	1.0	1.0	1.1	1.1	—	—	—	—	—	—	—	—	—	—	*	*									
45.5	50.7	55.7	60.8	65.9	72.0	78.0	84.1	91.1	98.7	106.2	116.2	123.8	133.8	143.8	10.90	31.50	2.91	16.78	20.64	26.52	37.17	15.19	18.53	23.48	31.62
1.0	1.0	1.0	1.0	1.0	1.0	1.1	1.1	1.1	1.1	1.1	1.1	1.1	1.1	1.1											
63.9	69.0	74.0	79.0	84.0	—	—	—	—	—	—	—	—	—	—	5.20	15.00	2.92	5.90	7.24	9.30	13.19	*	*	*	*
1.0	1.0	1.0	1.1	1.1	—	—	—	—	—	—	—	—	—	—	*	*									
62.9	67.9	72.9	77.9	82.9	—	—	—	—	—	—	—	—	—	—	5.50	16.00	2.94	6.50	7.97	10.25	14.56	*	*	*	*
1.0	1.0	1.0	1.1	1.1	—	—	—	—	—	—	—	—	—	—	*	*									
54.6	59.7	64.7	69.7	74.8	80.8	86.8	92.9	99.9	107.4	114.9	124.9	132.5	142.5	152.5	8.00	23.60	2.97	11.34	13.95	17.98	25.52	9.86	12.04	15.33	21.11
1.0	1.0	1.0	1.0	1.0	1.1	1.1	1.1	1.1	1.1	1.1	1.1	1.1	1.1	1.2											
60.0	65.1	70.1	75.1	80.1	—	—	—	—	—	—	—	—	—	—	6.30	18.70	3.00	8.08	9.91	12.76	18.16	*	*	*	*
1.0	1.0	1.0	1.0	1.1	—	—	—	—	—	—	—	—	—	—	*	*									
57.3	62.4	67.4	72.4	77.5	83.5	89.5	95.5	102.5	110.0	117.6	127.6	135.1	145.1	155.1	7.10	21.20	3.01	9.61	11.82	15.24	21.67	8.17	9.96	12.67	17.49
1.0	1.0	1.0	1.0	1.0	1.1	1.1	1.1	1.1	1.1	1.1	1.1	1.1	1.1	1.2											
38.7	44.0	49.1	54.3	59.4	65.5	71.6	77.7	84.8	92.4	99.9	110.0	117.6	127.6	137.7	12.50	37.50	3.02	19.71	24.21	31.03	43.04	18.04	21.96	27.68	36.60
0.9	1.0	1.0	1.0	1.0	1.0	1.0	1.1	1.1	1.1	1.1	1.1	1.1	1.1	1.1											
66.0	71.0	76.0	81.1	86.1	—	—	—	—	—	—	—	—	—	—	4.40	13.20	3.05	4.31	5.27	6.73	9.49	*	*	*	*
1.0	1.0	1.0	1.1	1.1	—	—	—	—	—	—	—	—	—	—	*	*									
49.9	54.9	60.0	65.1	70.1	76.2	82.2	88.2	95.3	102.8	110.3	120.4	127.9	137.9	147.9	9.25	28.00	3.05	13.70	16.86	21.72	30.69	12.19	14.88	18.92	25.86
1.0	1.0	1.0	1.0	1.0	1.0	1.1	1.1	1.1	1.1	1.1	1.1	1.1	1.1	1.1											
65.2	70.2	75.2	80.2	85.2	—	—	—	—	—	—	—	—	—	—	4.65	14.00	3.05	4.81	5.89	7.54	10.66	*	*	*	*
1.0	1.0	1.0	1.1	1.1	—	—	—	—	—	—	—	—	—	—	*	*									

* = Diameters below RMA minimum for other than Cog-Belt V-belts. Use with Super Power-Wedge V-belts will result in reduced life and loss of efficiency.

⚠ **WARNING**** = Sheave Rim Speed in excess of 6500 feet per minute - see Page 236

Arc-Length Correction Factors are located beneath Center Distance Values

POWER-WEDGE PRE-ENGINEERED DRIVE SELECTION TABLES

5V/5VX PRE-ENGINEERED TABLES RATIO 3.08 - 3.64

Driven Speed for Motor Speed of				Sheave Outside Diameters		V-Belt Number and Center Distance (other sizes may be available, see page 214)																				
690 RPM	870 RPM	1160 RPM	1750 RPM	Small Sheave	Large Sheave	Speed Ratio	5VX 500	5VX 530	5VX 560	5VX 600	5VX 630	5VX 670	5VX 710	5VX 750	5VX 800	5VX 850	5VX 900	5VX 950	5VX 1000	5VX 1060	5VX 1120	5VX 1180	5VX 1250	5VX 1320	5VX 1400	5VX 1500
224	283	377	568	10.30	31.50	3.08	—	—	—	—	—	—	—	—	—	—	—	—	—	—	—	23.8	27.6	31.4	35.6	40.8
							—	—	—	—	—	—	—	—	—	—	—	—	—	—	—	0.8	0.9	0.9	0.9	1.0
222	280	374	564	4.90	15.00	3.10	—	—	—	13.4	15.0	17.1	19.2	21.3	23.8	26.4	28.9	31.5	34.0	37.0	40.1	43.1	46.6	50.1	54.1	59.2
				*	*		—	—	—	0.8	0.8	0.8	0.8	0.9	0.9	0.9	0.9	0.9	0.9	0.9	0.9	1.0	1.0	1.0	1.0	1.0
221	279	372	561	5.20	16.00	3.12	—	—	—	12.1	13.8	15.9	18.0	20.1	22.7	25.3	27.8	30.4	32.9	35.9	39.0	42.0	45.5	49.1	53.1	58.1
				*	*		—	—	—	0.7	0.8	0.8	0.8	0.8	0.9	0.9	0.9	0.9	0.9	0.9	0.9	1.0	1.0	1.0	1.0	1.0
220	278	370	558	9.00	28.00	3.13	—	—	—	—	—	—	—	—	—	—	—	—	—	2.19	25.1	28.3	32.0	35.7	39.8	44.9
							—	—	—	—	—	—	—	—	—	—	—	—	—	0.8	0.9	0.9	0.9	0.9	0.9	1.0
220	277	370	558	16.00	50.00	3.14	—	—	—	—	—	—	—	—	—	—	—	—	—	—	—	—	—	—	—	—
							—	—	—	—	—	—	—	—	—	—	—	—	—	—	—	—	—	—	—	—
217	274	365	551	7.50	23.60	3.18	—	—	—	—	—	—	—	—	—	—	18.9	21.6	24.2	27.4	30.5	33.6	37.2	40.8	44.9	49.9
							—	—	—	—	—	—	—	—	—	—	0.8	0.8	0.9	0.9	0.9	0.9	0.9	1.0	1.0	1.0
216	272	363	547	11.80	37.50	3.20	—	—	—	—	—	—	—	—	—	—	—	—	—	—	—	—	—	—	28.4	33.8
							—	—	—	—	—	—	—	—	—	—	—	—	—	—	—	—	—	—	0.9	0.9
216	272	363	547	6.70	21.20	3.20	—	—	—	—	—	—	—	—	16.5	19.2	21.9	24.5	27.1	30.2	33.3	36.4	39.9	43.5	47.5	52.6
				*	*		—	—	—	—	—	—	—	—	0.8	0.8	0.8	0.9	0.9	0.9	0.9	0.9	0.9	1.0	1.0	1.0
215	271	362	546	5.90	18.70	3.21	—	—	—	—	—	—	14.8	17.0	19.6	22.3	24.9	27.4	30.0	33.1	36.1	39.2	42.7	46.2	50.3	55.3
				*	*		—	—	—	—	—	—	0.8	0.8	0.8	0.9	0.9	0.9	0.9	0.9	0.9	0.9	1.0	1.0	1.0	1.0
213	269	359	541	4.40	14.00	3.23	—	11.0	12.6	14.8	16.3	18.4	20.5	22.5	25.1	27.6	30.2	32.7	35.2	38.2	41.3	44.3	47.8	51.3	55.3	60.4
				*	*		—	0.7	0.8	0.8	0.8	0.8	0.8	0.9	0.9	0.9	0.9	0.9	0.9	0.9	1.0	1.0	1.0	1.0	1.0	1.0
212	267	356	538	9.75	31.50	3.25	—	—	—	—	—	—	—	—	—	—	—	—	—	—	—	24.2	28.0	31.7	36.0	41.2
							—	—	—	—	—	—	—	—	—	—	—	—	—	—	—	0.8	0.9	0.9	0.9	0.9
211	266	354	534	4.65	15.00	3.27	—	—	11.4	13.6	15.2	17.3	19.4	21.4	24.0	26.6	29.1	31.6	34.2	37.2	40.2	43.3	46.8	50.3	54.3	59.3
				*	*		—	—	0.7	0.8	0.8	0.8	0.8	0.9	0.9	0.9	0.9	0.9	0.9	0.9	0.9	1.0	1.0	1.0	1.0	1.0
208	263	350	528	4.90	16.00	3.31	—	—	—	12.3	14.0	16.1	18.2	20.3	22.9	25.5	28.0	30.6	33.1	36.2	39.2	42.2	45.7	49.3	53.3	58.3
				*	*		—	—	—	0.7	0.8	0.8	0.8	0.8	0.9	0.9	0.9	0.9	0.9	0.9	0.9	1.0	1.0	1.0	1.0	1.0
208	262	349	527	8.50	28.00	3.32	—	—	—	—	—	—	—	—	—	—	—	—	—	22.2	25.5	28.7	32.4	36.0	40.1	45.3
							—	—	—	—	—	—	—	—	—	—	—	—	—	0.8	0.9	0.9	0.9	0.9	0.9	1.0
207	261	347	524	11.30	37.50	3.34	—	—	—	—	—	—	—	—	—	—	—	—	—	—	—	—	—	—	28.7	34.2
							—	—	—	—	—	—	—	—	—	—	—	—	—	—	—	—	—	—	0.9	0.9
206	260	346	523	15.00	50.00	3.35	—	—	—	—	—	—	—	—	—	—	—	—	—	—	—	—	—	—	—	—
							—	—	—	—	—	—	—	—	—	—	—	—	—	—	—	—	—	—	—	—
206	259	346	521	7.10	23.60	3.36	—	—	—	—	—	—	—	—	—	—	19.1	21.8	24.5	27.7	30.8	33.9	37.5	41.1	45.1	50.2
							—	—	—	—	—	—	—	—	—	—	0.8	0.8	0.9	0.9	0.9	0.9	0.9	1.0	1.0	1.0
203	256	341	514	6.30	21.20	3.40	—	—	—	—	—	—	—	—	16.7	19.5	22.1	24.8	27.4	30.5	33.6	36.6	40.2	43.8	47.8	52.9
				*	*		—	—	—	—	—	—	—	—	0.8	0.8	0.8	0.9	0.9	0.9	0.9	0.9	0.9	1.0	1.0	1.0
201	254	338	510	9.25	31.50	3.43	—	—	—	—	—	—	—	—	—	—	—	—	—	—	—	24.5	28.3	32.1	36.3	41.5
							—	—	—	—	—	—	—	—	—	—	—	—	—	—	—	0.8	0.9	0.9	0.9	0.9
200	253	337	508	5.50	18.70	3.44	—	—	—	—	—	—	15.0	17.2	19.9	22.5	25.1	27.7	30.3	33.3	36.4	39.4	43.0	46.5	50.6	55.6
				*	*		—	—	—	—	—	—	0.8	0.8	0.8	0.9	0.9	0.9	0.9	0.9	0.9	0.9	1.0	1.0	1.0	1.0
199	251	335	505	10.90	37.50	3.46	—	—	—	—	—	—	—	—	—	—	—	—	—	—	—	—	—	—	28.9	34.4
							—	—	—	—	—	—	—	—	—	—	—	—	—	—	—	—	—	—	0.9	0.9
199	251	335	505	4.40	15.00	3.47	—	—	11.5	13.7	15.3	17.5	19.5	21.6	24.2	26.7	29.3	31.8	34.4	37.4	40.4	43.4	47.0	50.5	54.5	59.5
				*	*		—	—	0.7	0.8	0.8	0.8	0.8	0.9	0.9	0.9	0.9	0.9	0.9	0.9	0.9	1.0	1.0	1.0	1.0	1.0
197	249	332	501	4.65	16.00	3.49	—	—	—	12.5	14.1	16.3	18.4	20.5	23.1	25.7	28.2	30.8	33.3	36.3	39.4	42.4	45.9	49.5	53.5	58.5
				*	*		—	—	—	0.7	0.8	0.8	0.8	0.8	0.9	0.9	0.9	0.9	0.9	0.9	0.9	1.0	1.0	1.0	1.0	1.0
196	247	329	496	9.00	31.50	3.53	—	—	—	—	—	—	—	—	—	—	—	—	—	—	—	24.6	28.5	32.2	36.5	41.7
							—	—	—	—	—	—	—	—	—	—	—	—	—	—	—	0.8	0.9	0.9	0.9	0.9
195	246	328	496	8.00	28.00	3.53	—	—	—	—	—	—	—	—	—	—	—	—	—	22.5	25.8	29.0	32.7	36.4	40.5	45.6
							—	—	—	—	—	—	—	—	—	—	—	—	—	0.8	0.9	0.9	0.9	0.9	0.9	1.0
194	244	326	491	6.70	23.60	3.56	—	—	—	—	—	—	—	—	—	—	19.4	22.1	24.8	27.9	31.1	34.2	37.8	41.3	45.4	50.5
				*	*		—	—	—	—	—	—	—	—	—	—	0.8	0.8	0.9	0.9	0.9	0.9	0.9	0.9	1.0	1.0
192	242	323	487	14.00	50.00	3.59	—	—	—	—	—	—	—	—	—	—	—	—	—	—	—	—	—	—	—	—
							—	—	—	—	—	—	—	—	—	—	—	—	—	—	—	—	—	—	—	—
190	239	319	481	5.90	21.20	3.64	—	—	—	—	—	—	—	—	17.0	19.7	22.4	25.0	27.7	30.8	33.9	36.9	40.5	44.1	48.1	53.2
				*	*		—	—	—	—	—	—	—	—	0.8	0.8	0.8	0.9	0.9	0.9	0.9	0.9	0.9	1.0	1.0	1.0

* = Diameters below RMA minimum for other than Cog-Belt V-belts. Use with Super Power-Wedge V-belts will result in reduced life and loss of efficiency.

⚠ **WARNING**** = Sheave Rim Speed in excess of 6500 feet per minute - see Page 236

Arc-Length Correction Factors are located beneath Center Distance Values

POWER-WEDGE PRE-ENGINEERED DRIVE SELECTION TABLES

5V/5VX PRE-ENGINEERED TABLES RATIO 3.08 - 3.64

V-Belt Number and Center Distance (Other sizes may be available, see page 214)																		Rated HP per Belt (Includes Added HP for Speed Ratio) Power-Wedge Cog-Belt (5VX) RPM of Small Sheave				Rated HP per Belt (Includes Added HP for Speed Ratio) Super Power-Wedge Belt (5V) RPM of Small Sheave			
5VX 1600	5VX 1700	5VX 1800	5VX 1900	5VX 2000	5V 2120	5V 2240	5V 2360	5V 2500	5V 2650	5V 2800	5V 3000	5V 3150	5V 3350	5V 3550	Small Sheave	Large Sheave	Speed Ratio	690 RPM	870 RPM	1160 RPM	1750 RPM	690 RPM	870 RPM	1160 RPM	1170 RPM
45.9	51.1	56.2	61.3	66.3	72.4	78.5	84.5	91.6	99.1	106.6	116.7	124.2	134.3	144.3	10.30	31.50	3.08	15.67	18.27	24.79	34.86	14.11	17.22	21.84	29.60
1.0	1.0	1.0	1.0	1.0	1.0	1.1	1.1	1.1	1.1	1.1	1.1	1.1	1.1	1.1											
64.2	69.2	74.2	79.2	84.2	—	—	—	—	—	—	—	—	—	—	4.90	15.00	3.10	5.31	6.50	8.34	11.81	*	*	*	*
1.0	1.0	1.0	1.0	1.1	—	—	—	—	—	—	—	—	—	—	*	*									
63.1	68.1	73.2	78.2	83.2	—	—	—	—	—	—	—	—	—	—	5.20	16.00	3.12	5.90	7.24	9.30	13.19	*	*	*	*
1.0	1.0	1.0	1.0	1.1	—	—	—	—	—	—	—	—	—	—	*	*									
50.0	55.1	60.2	65.2	70.3	76.3	82.4	88.4	95.5	103.0	110.5	120.6	128.1	138.1	148.1	9.00	28.00	3.13	13.23	16.29	20.98	29.67	11.73	14.32	18.21	24.93
1.0	1.0	1.0	1.0	1.0	1.0	1.1	1.1	1.1	1.1	1.1	1.1	1.1	1.1	1.1											
—	—	—	39.5	44.9	51.3	57.7	63.9	71.1	78.8	86.5	96.7	104.3	114.4	124.5	16.00	50.00	3.14	25.95	31.75	40.34	**	24.03	29.08	36.09	**
—	—	—	0.9	0.9	1.0	1.0	1.0	1.0	1.1	1.1	1.1	1.1	1.1	1.1											
55.0	60.0	65.1	70.1	75.1	81.2	87.2	93.2	100.3	107.8	115.3	125.3	132.8	142.8	152.9	7.50	23.60	3.18	10.38	12.77	16.47	23.39	8.92	10.89	13.86	19.12
1.0	1.0	1.0	1.0	1.0	1.1	1.1	1.1	1.1	1.1	1.1	1.1	1.1	1.1	1.2											
39.2	44.4	49.6	54.8	59.9	66.0	72.1	78.2	85.3	92.9	100.5	110.5	118.1	128.1	138.2	11.80	37.50	3.20	18.43	22.66	29.08	40.53	16.80	20.48	25.87	34.50
0.9	1.0	1.0	1.0	1.0	1.0	1.0	1.1	1.1	1.1	1.1	1.1	1.1	1.1	1.1											
57.6	62.7	67.7	72.7	77.7	—	—	—	—	—	—	—	—	—	—	6.70	21.20	3.20	8.84	10.87	14.01	19.92	*	*	*	*
1.0	1.0	1.0	1.0	1.0	—	—	—	—	—	—	—	—	—	—	*	*									
60.3	65.4	70.4	75.4	80.4	—	—	—	—	—	—	—	—	—	—	5.90	18.70	3.21	7.28	8.94	11.51	16.37	*	*	*	*
1.0	1.0	1.0	1.0	1.1	—	—	—	—	—	—	—	—	—	—	*	*									
65.4	70.4	75.4	80.4	85.4	—	—	—	—	—	—	—	—	—	—	4.40	14.00	3.23	4.31	5.27	6.73	9.49	*	*	*	*
1.0	1.0	1.0	1.1	1.1	—	—	—	—	—	—	—	—	—	—	*	*									
46.3	51.1	56.6	61.6	66.7	72.8	78.9	84.9	92.0	99.5	107.0	117.0	124.6	134.7	144.7	9.75	31.50	3.25	14.64	18.02	23.19	32.70	13.10	16.00	20.32	27.67
1.0	1.0	1.0	1.0	1.0	1.0	1.1	1.1	1.1	1.1	1.1	1.1	1.1	1.1	1.1											
64.4	69.4	74.4	79.4	84.4	—	—	—	—	—	—	—	—	—	—	4.65	15.00	3.27	4.81	5.89	7.54	10.66	*	*	*	*
1.0	1.0	1.0	1.0	1.1	—	—	—	—	—	—	—	—	—	—	*	*									
63.3	68.4	73.4	78.4	83.4	—	—	—	—	—	—	—	—	—	—	4.90	16.00	3.31	5.31	6.50	8.34	11.81	*	*	*	*
1.0	1.0	1.0	1.0	1.1	—	—	—	—	—	—	—	—	—	—	*	*									
50.4	55.5	60.5	65.6	70.7	76.7	82.8	88.8	95.8	103.4	110.9	120.9	128.5	138.5	148.5	8.50	28.00	3.32	12.29	15.12	19.49	27.61	10.80	13.19	16.78	23.05
1.0	1.0	1.0	1.0	1.0	1.0	1.1	1.1	1.1	1.1	1.1	1.1	1.1	1.1	1.1											
39.5	44.8	50.0	55.1	60.2	66.4	72.5	78.6	85.7	93.3	100.8	110.9	118.4	128.5	138.6	11.30	37.50	3.34	17.52	21.54	27.66	28.68	15.91	19.40	24.55	32.93
0.9	1.0	1.0	1.0	1.0	1.0	1.0	1.1	1.1	1.1	1.1	1.1	1.1	1.1	1.1											
—	—	34.5	40.1	45.6	52.0	58.3	64.6	71.8	79.5	87.2	97.4	105.0	115.1	125.2	15.00	50.00	3.35	24.19	29.64	37.76	**	22.35	27.10	33.81	**
—	—	0.9	0.9	0.9	1.0	1.0	1.0	1.0	1.1	1.1	1.1	1.1	1.1	1.1											
55.3	60.3	65.4	70.4	75.5	81.5	87.5	93.5	100.5	108.1	115.6	125.6	133.1	143.2	153.2	7.10	23.60	3.36	9.61	11.82	15.24	21.67	8.17	9.96	12.67	17.49
1.0	1.0	1.0	1.0	1.0	1.1	1.1	1.1	1.1	1.1	1.1	1.1	1.1	1.1	1.2											
57.9	63.0	68.0	73.0	78.0	—	—	—	—	—	—	—	—	—	—	6.30	21.20	3.40	8.06	9.91	12.76	18.16	*	*	*	*
1.0	1.0	1.0	1.0	1.0	—	—	—	—	—	—	—	—	—	—	*	*									
46.7	51.8	56.9	62.0	67.1	73.1	79.2	85.3	92.3	99.9	107.4	117.5	125.0	135.0	145.1	9.25	31.50	3.43	13.70	16.86	21.72	30.69	12.23	14.94	18.99	25.97
1.0	1.0	1.0	1.0	1.0	1.0	1.1	1.1	1.1	1.1	1.1	1.1	1.1	1.1	1.1											
60.6	65.7	70.7	75.7	80.7	—	—	—	—	—	—	—	—	—	—	5.50	18.70	3.44	6.50	7.97	10.25	14.56	*	*	*	*
1.0	1.0	1.0	1.0	1.1	—	—	—	—	—	—	—	—	—	—	*	*									
39.8	45.0	50.2	55.4	60.5	66.7	72.8	78.9	86.0	93.5	101.1	111.2	118.7	128.8	138.8	10.90	37.50	3.46	16.78	20.64	26.52	37.17	15.24	18.59	23.55	31.74
0.9	1.0	1.0	1.0	1.0	1.0	1.0	1.1	1.1	1.1	1.1	1.1	1.1	1.1	1.1											
64.5	69.6	74.6	79.6	84.6	—	—	—	—	—	—	—	—	—	—	4.40	15.00	3.47	4.31	5.27	6.73	9.49	*	*	*	*
1.0	1.0	1.0	1.0	1.1	—	—	—	—	—	—	—	—	—	—	*	*									
63.5	68.5	73.6	78.6	83.6	—	—	—	—	—	—	—	—	—	—	4.65	16.00	3.49	4.81	5.89	7.54	10.68	*	*	*	*
1.0	1.0	1.0	1.0	1.1	—	—	—	—	—	—	—	—	—	—	*	*									
46.8	52.0	57.1	62.2	67.3	73.3	79.4	85.5	92.5	100.1	107.6	117.7	125.2	135.2	145.3	9.00	31.50	3.53	13.23	16.29	20.98	29.67	11.77	14.38	18.29	25.05
1.0	1.0	1.0	1.0	1.0	1.0	1.1	1.1	1.1	1.1	1.1	1.1	1.1	1.1	1.1											
50.7	55.8	60.9	66.0	71.0	77.1	83.1	89.2	96.2	103.7	111.3	121.3	128.8	138.8	148.9	8.00	28.00	3.53	11.34	13.95	17.98	25.52	9.91	12.10	15.40	21.22
1.0	1.0	1.0	1.0	1.0	1.0	1.1	1.1	1.1	1.1	1.1	1.1	1.1	1.1	1.1											
55.6	60.6	65.7	70.7	75.7	—	—	—	—	—	—	—	—	—	—	6.70	23.60	3.56	8.84	10.87	14.01	19.92	*	*	*	*
1.0	1.0	1.0	1.0	1.0	—	—	—	—	—	—	—	—	—	—	*	*									
—	—	35.1	40.8	46.2	52.7	59.0	65.3	72.5	80.2	87.9	98.1	105.7	115.7	125.9	14.00	50.00	3.59	22.41	27.49	35.11	48.15	20.69	25.14	31.50	40.76
—	—	0.9	0.9	0.9	1.0	1.0	1.0	1.0	1.0	1.1	1.1	1.1	1.1	1.1											
58.2	63.3	68.3	73.3	78.3	—	—	—	—	—	—	—	—	—	—	5.90	21.20	3.64	7.28	8.94	11.51	16.37	*	*	*	*
1.0	1.0	1.0	1.0	1.0	—	—	—	—	—	—	—	—	—	—	*	*									

* = Diameters below RMA minimum for other than Cog-Belt V-belts. Use with Super Power-Wedge V-belts will result in reduced life and loss of efficiency.

⚠ **WARNING**** = Sheave Rim Speed in excess of 6500 feet per minute - see Page 236

Arc-Length Correction Factors are located beneath Center Distance Values

POWER-WEDGE PRE-ENGINEERED DRIVE SELECTION TABLES

5V/5VX PRE-ENGINEERED TABLES RATIO 3.65 - 4.61

Driven Speed for Motor Speed of				Sheave Outside Diameters		V-Belt Number and Center Distance (other sizes may be available, see page 214)																				
690 RPM	870 RPM	1160 RPM	1750 RPM	Small Sheave	Large Sheave	Speed Ratio	5VX 500	5VX 530	5VX 560	5VX 600	5VX 630	5VX 670	5VX 710	5VX 750	5VX 800	5VX 850	5VX 900	5VX 950	5VX 1000	5VX 1060	5VX 1120	5VX 1180	5VX 1250	5VX 1320	5VX 1400	5VX 1500
189	239	318	480	5.20	18.70	3.65	—	—	—	—	—	—	15.2	17.4	20.1	22.7	25.3	27.9	30.5	33.5	36.6	39.7	43.2	46.7	50.8	55.8
			*	*			—	—	—	—	—	—	0.8	0.8	0.8	0.9	0.9	0.9	0.9	0.9	0.9	0.9	1.0	1.0	1.0	1.0
188	237	316	477	10.30	37.50	3.67	—	—	—	—	—	—	—	—	—	—	—	—	—	—	—	—	—	—	29.3	34.8
							—	—	—	—	—	—	—	—	—	—	—	—	—	—	—	—	—	—	0.9	0.9
187	235	314	473	4.40	16.00	3.70	—	—	—	12.6	14.3	16.5	18.6	20.7	23.3	25.8	28.4	30.9	33.5	36.5	39.6	42.6	46.1	49.6	53.7	58.7
			*	*			—	—	—	0.7	0.8	0.8	0.8	0.8	0.9	0.9	0.9	0.9	0.9	0.9	0.9	1.0	1.0	1.0	1.0	1.0
185	233	310	468	8.50	31.50	3.74	—	—	—	—	—	—	—	—	—	—	—	—	—	—	21.5	24.9	28.8	32.6	36.8	42.0
							—	—	—	—	—	—	—	—	—	—	—	—	—	—	0.8	0.8	0.9	0.9	0.9	0.9
183	231	308	464	7.50	28.00	3.77	—	—	—	—	—	—	—	—	—	—	—	—	19.4	22.8	26.1	29.3	33.0	36.7	40.8	46.0
							—	—	—	—	—	—	—	—	—	—	—	—	0.8	0.8	0.9	0.9	0.9	0.9	0.9	1.0
182	230	306	462	6.30	23.60	3.79	—	—	—	—	—	—	—	—	—	16.8	19.6	22.3	25.0	28.2	31.3	34.4	38.0	41.6	45.7	50.8
			*	*			—	—	—	—	—	—	—	—	—	0.8	0.8	0.8	0.9	0.9	0.9	0.9	0.9	0.9	1.0	1.0
181	228	305	459	13.20	50.00	3.81	—	—	—	—	—	—	—	—	—	—	—	—	—	—	—	—	—	—	—	—
							—	—	—	—	—	—	—	—	—	—	—	—	—	—	—	—	—	—	—	—
178	225	299	452	4.90	18.70	3.88	—	—	—	—	—	—	15.4	17.6	20.3	22.9	25.5	28.1	30.7	33.8	36.8	39.9	43.4	47.0	51.0	56.0
			*	*			—	—	—	—	—	—	0.8	0.8	0.8	0.9	0.9	0.9	0.9	0.9	0.9	0.9	1.0	1.0	1.0	1.0
178	224	299	452	9.75	37.50	3.88	—	—	—	—	—	—	—	—	—	—	—	—	—	—	—	—	—	—	29.6	35.2
							—	—	—	—	—	—	—	—	—	—	—	—	—	—	—	—	—	—	0.9	0.9
177	223	297	448	5.50	21.20	3.91	—	—	—	—	—	—	—	—	17.2	20.0	22.7	25.3	27.9	31.0	34.1	37.2	40.8	44.3	48.4	53.5
			*	*			—	—	—	—	—	—	—	—	0.8	0.8	0.8	0.9	0.9	0.9	0.9	0.9	0.9	1.0	1.0	1.0
174	219	292	440	8.00	31.50	3.97	—	—	—	—	—	—	—	—	—	—	—	—	—	—	21.8	25.2	29.1	32.9	37.1	42.3
							—	—	—	—	—	—	—	—	—	—	—	—	—	—	0.8	0.8	0.9	0.9	0.9	0.9
173	218	291	439	7.10	28.00	3.99	—	—	—	—	—	—	—	—	—	—	—	—	19.7	23.1	26.4	29.6	33.3	37.0	41.1	46.3
							—	—	—	—	—	—	—	—	—	—	—	—	0.8	0.8	0.9	0.9	0.9	0.9	0.9	1.0
171	216	288	435	12.50	50.00	4.02	—	—	—	—	—	—	—	—	—	—	—	—	—	—	—	—	—	—	—	—
							—	—	—	—	—	—	—	—	—	—	—	—	—	—	—	—	—	—	—	—
170	215	286	432	5.90	23.60	4.05	—	—	—	—	—	—	—	—	—	17.0	19.9	22.6	25.3	28.5	31.6	34.7	38.3	41.9	46.0	51.1
			*	*			—	—	—	—	—	—	—	—	—	0.8	0.8	0.8	0.9	0.9	0.9	0.9	0.9	0.9	1.0	1.0
169	213	284	428	9.25	37.50	4.09	—	—	—	—	—	—	—	—	—	—	—	—	—	—	—	-0.0	-0.0	25.3	30.0	35.5
							—	—	—	—	—	—	—	—	—	—	—	—	—	—	—	—	—	0.8	0.9	0.9
169	213	284	428	4.65	18.70	4.09	—	—	—	—	—	13.3	15.6	17.8	20.5	23.1	25.7	28.3	30.9	33.9	37.0	40.0	43.6	47.1	51.2	56.2
			*	*			—	—	—	—	—	0.7	0.8	0.8	0.8	0.9	0.9	0.9	0.9	0.9	0.9	0.9	1.0	1.0	1.0	1.0
167	210	280	423	5.20	21.20	4.14	—	—	—	—	—	—	—	—	17.4	20.2	22.9	25.5	28.1	31.2	34.3	37.4	41.0	44.5	48.6	53.7
			*	*			—	—	—	—	—	—	—	—	0.8	0.8	0.8	0.9	0.9	0.9	0.9	0.9	0.9	1.0	1.0	1.0
164	207	276	416	9.00	37.50	4.20	—	—	—	—	—	—	—	—	—	—	—	—	—	—	—	—	—	25.5	30.1	35.6
							—	—	—	—	—	—	—	—	—	—	—	—	—	—	—	—	—	0.8	0.9	0.9
163	206	274	414	6.70	28.00	4.23	—	—	—	—	—	—	—	—	—	—	—	—	19.9	23.3	26.6	29.8	33.6	37.2	41.4	46.5
			*	*			—	—	—	—	—	—	—	—	—	—	—	—	0.8	0.8	0.9	0.9	0.9	0.9	0.9	1.0
163	205	273	412	7.50	31.50	4.24	—	—	—	—	—	—	—	—	—	—	—	—	—	—	22.1	25.6	29.4	33.2	37.4	42.7
							—	—	—	—	—	—	—	—	—	—	—	—	—	—	0.8	0.8	0.9	0.9	0.9	0.9
160	201	268	405	4.40	18.70	4.33	—	—	—	—	—	13.5	15.7	17.9	20.6	23.3	25.9	28.5	31.0	34.1	37.2	40.2	43.8	47.3	51.4	56.4
			*	*			—	—	—	—	—	0.7	0.8	0.8	0.8	0.8	0.9	0.9	0.9	0.9	0.9	0.9	1.0	1.0	1.0	1.0
159	200	267	402	5.50	23.60	4.35	—	—	—	—	—	—	—	—	—	17.3	20.1	22.9	25.5	28.7	31.9	35.0	38.6	42.2	46.3	51.3
			*	*			—	—	—	—	—	—	—	—	—	0.8	0.8	0.8	0.9	0.9	0.9	0.9	0.9	0.9	1.0	1.0
157	198	264	398	4.90	21.20	4.40	—	—	—	—	—	—	—	14.7	17.6	20.4	23.1	25.7	28.3	31.4	34.5	37.6	41.2	44.8	48.8	53.9
			*	*			—	—	—	—	—	—	—	0.7	0.8	0.8	0.8	0.9	0.9	0.9	0.9	0.9	0.9	1.0	1.0	1.0
155	195	261	393	8.50	37.50	4.45	—	—	—	—	—	—	—	—	—	—	—	—	—	—	—	—	—	25.8	30.4	35.9
							—	—	—	—	—	—	—	—	—	—	—	—	—	—	—	—	—	0.8	0.8	0.9
155	195	260	393	11.30	50.00	4.46	—	—	—	—	—	—	—	—	—	—	—	—	—	—	—	—	—	—	—	—
							—	—	—	—	—	—	—	—	—	—	—	—	—	—	—	—	—	—	—	—
154	194	259	390	7.10	31.50	4.49	—	—	—	—	—	—	—	—	—	—	—	—	—	—	22.4	25.8	29.7	33.5	37.7	43.0
							—	—	—	—	—	—	—	—	—	—	—	—	—	—	0.8	0.8	0.9	0.9	0.9	0.9
153	193	258	389	6.30	28.00	4.50	—	—	—	—	—	—	—	—	—	—	—	—	20.1	23.6	26.9	30.1	33.8	37.5	41.6	46.8
			*	*			—	—	—	—	—	—	—	—	—	—	—	—	0.8	0.8	0.9	0.9	0.9	0.9	0.9	1.0
150	189	252	380	5.20	23.60	4.61	—	—	—	—	—	—	—	—	—	17.5	20.3	23.0	25.7	28.9	32.1	35.2	38.8	42.4	46.5	51.6
			*	*			—	—	—	—	—	—	—	—	—	0.8	0.8	0.8	0.9	0.9	0.9	0.9	0.9	0.9	1.0	1.0

* = Diameters below RMA minimum for other than Cog-Belt V-belts. Use with Super Power-Wedge V-belts will result in reduced life and loss of efficiency.

⚠ **WARNING**** = Sheave Rim Speed in excess of 6500 feet per minute - see Page 236

Arc-Length Correction Factors are located beneath Center Distance Values

POWER-WEDGE PRE-ENGINEERED DRIVE SELECTION TABLES

5V/5VX PRE-ENGINEERED TABLES — RATIO 3.65 - 4.61

V-Belt Number and Center Distance (Other sizes may be available, see page 214)																		Rated HP per Belt (Includes Added HP for Speed Ratio) Power-Wedge Cog-Belt (5VX) RPM of Small Sheave				Rated HP per Belt (Includes Added HP for Speed Ratio) Super Power-Wedge Belt (5V) RPM of Small Sheave			
5VX 1600	5VX 1700	5VX 1800	5VX 1900	5VX 2000	5V 2120	5V 2240	5V 2360	5V 2500	5V 2650	5V 2800	5V 3000	5V 3150	5V 3350	5V 3550	Small Sheave	Large Sheave	Speed Ratio	690 RPM	870 RPM	1160 RPM	1750 RPM	690 RPM	870 RPM	1160 RPM	1170 RPM
60.9	65.9	70.9	75.9	80.9	—	—	—	—	—	—	—	—	—	—	5.20	18.70	3.65	5.90	7.24	9.30	13.19	*	*	*	*
1.0	1.0	1.0	1.0	1.1	—	—	—	—	—	—	—	—	—	—	*	*									
40.2	45.4	50.6	55.8	60.9	67.1	73.2	79.3	86.4	94.0	101.5	111.6	119.2	129.2	139.3	10.30	37.50	3.67	15.67	19.27	24.79	34.86	14.15	17.27	21.92	29.71
0.9	1.0	1.0	1.0	1.0	1.0	1.0	1.0	1.1	1.1	1.1	1.1	1.1	1.1	1.1											
63.7	68.7	73.7	78.8	83.8	—	—	—	—	—	—	—	—	—	—	4.40	16.00	3.70	4.31	5.27	6.73	9.49	*	*	*	*
1.0	1.0	1.0	1.0	1.1	—	—	—	—	—	—	—	—	—	—	*	*									
47.2	52.3	57.4	62.5	67.6	73.7	79.8	85.8	92.9	100.4	108.0	118.0	125.6	135.6	145.6	8.50	31.50	3.74	12.29	15.12	19.49	27.61	10.84	13.24	16.85	23.16
0.9	1.0	1.0	1.0	1.0	1.0	1.1	1.1	1.1	1.1	1.1	1.1	1.1	1.1	1.1											
51.1	56.2	61.3	66.3	71.4	77.4	83.5	89.5	96.6	104.1	111.6	121.7	129.2	139.2	149.3	7.50	28.00	3.77	10.38	12.77	16.47	23.39	8.97	10.95	13.93	19.23
0.9	1.0	1.0	1.0	1.0	1.0	1.1	1.1	1.1	1.1	1.1	1.1	1.1	1.1	1.1											
55.8	60.9	65.9	71.0	76.0	—	—	—	—	—	—	—	—	—	—	6.30	23.60	3.79	8.06	9.91	12.76	18.16	*	*	*	*
1.0	1.0	1.0	1.0	1.0	—	—	—	—	—	—	—	—	—	—	*	*									
—	—	35.6	41.3	46.7	53.2	59.5	65.8	73.0	80.8	88.4	98.6	106.3	116.4	126.5	13.20	50.00	3.81	20.98	25.75	32.95	45.48	19.31	23.49	29.53	38.68
—	—	0.9	0.9	0.9	1.0	1.0	1.0	1.0	1.0	1.1	1.1	1.1	1.1	1.1											
61.1	66.1	71.1	76.2	81.2	—	—	—	—	—	—	—	—	—	—	4.90	18.70	3.88	5.31	6.50	8.34	11.81	*	*	*	*
1.0	1.0	1.0	1.0	1.1	—	—	—	—	—	—	—	—	—	—	*	*									
40.5	45.8	51.0	56.2	61.3	67.5	73.6	79.7	86.8	94.4	101.9	112.0	119.6	129.6	139.7	9.75	37.50	3.88	14.64	18.02	23.19	32.70	13.15	16.06	20.40	27.78
0.9	1.0	1.0	1.0	1.0	1.0	1.0	1.0	1.1	1.1	1.1	1.1	1.1	1.1	1.1											
58.5	63.5	68.6	73.6	78.6	—	—	—	—	—	—	—	—	—	—	5.50	21.20	3.91	6.50	7.97	10.25	14.56	*	*	*	*
1.0	1.0	1.0	1.0	1.0	—	—	—	—	—	—	—	—	—	—	*	*									
47.5	52.7	57.8	62.9	68.0	74.0	80.1	86.2	93.2	100.8	108.3	118.4	125.9	136.0	146.0	8.00	31.50	3.97	11.34	13.95	17.98	25.52	9.91	12.10	15.40	21.22
1.0	1.0	1.0	1.0	1.0	1.0	1.1	1.1	1.1	1.1	1.1	1.1	1.1	1.1	1.1											
51.4	56.5	61.5	66.6	71.7	77.7	83.8	89.8	96.9	104.4	111.9	122.0	129.5	139.5	149.6	7.10	28.00	3.99	9.61	11.82	15.24	21.67	8.21	10.02	12.75	17.61
1.0	1.0	1.0	1.0	1.0	1.0	1.1	1.1	1.1	1.1	1.1	1.1	1.1	1.1	1.1											
—	—	36.0	41.7	47.2	53.6	60.0	66.3	73.5	81.2	88.9	99.1	106.8	116.9	127.0	12.50	5.00	4.02	19.71	24.21	31.03	43.04	18.08	22.02	27.76	36.71
—	—	0.9	0.9	0.9	1.0	1.0	1.0	1.0	1.0	1.1	1.1	1.1	1.1	1.1											
56.1	61.2	66.2	71.3	76.3	—	—	—	—	—	—	—	—	—	—	5.90	23.60	4.05	7.28	8.94	11.51	16.37	*	*	*	*
1.0	1.0	1.0	1.0	1.0	—	—	—	—	—	—	—	—	—	—	*	*									
40.8	46.1	51.3	56.5	61.7	67.8	73.9	80.0	87.1	94.7	102.3	112.4	120.0	130.0	140.1	9.25	37.50	4.09	13.70	16.86	21.72	30.69	12.23	14.94	18.99	25.97
1.0	1.0	1.0	1.0	1.0	1.0	1.0	1.1	1.1	1.1	1.1	1.1	1.1	1.1	1.1											
61.3	66.3	71.3	76.3	81.4	—	—	—	—	—	—	—	—	—	—	4.65	18.70	4.09	4.81	5.89	7.54	10.66	*	*	*	*
1.0	1.0	1.0	1.0	1.1	—	—	—	—	—	—	—	—	—	—	*	*									
58.7	63.8	68.8	73.8	78.9	—	—	—	—	—	—	—	—	—	—	5.20	21.20	4.14	5.90	7.24	9.30	13.19	*	*	*	*
1.0	1.0	1.0	1.0	1.0	—	—	—	—	—	—	—	—	—	—	*	*									
41.0	46.3	51.5	56.7	61.8	68.0	74.1	80.2	87.3	94.9	102.5	112.6	120.1	130.2	140.3	9.00	37.50	4.20	13.23	16.29	20.98	29.67	11.77	14.38	18.29	25.05
0.9	1.0	1.0	1.0	1.0	1.0	1.0	1.0	1.1	1.1	1.1	1.1	1.1	1.1	1.1											
51.6	56.7	61.8	66.9	72.0	—	—	—	—	—	—	—	—	—	—	6.70	28.00	4.23	8.84	10.87	14.01	19.92	*	*	*	*
1.0	1.0	1.0	1.0	1.0	—	—	—	—	—	—	—	—	—	—	*	*									
47.9	53.0	58.1	63.2	68.3	74.4	80.5	86.5	93.6	101.2	108.7	118.8	126.3	136.3	146.4	7.50	31.50	4.24	10.38	12.77	16.47	23.39	8.97	10.95	13.93	19.23
1.0	1.0	1.0	1.0	1.0	1.0	1.0	1.1	1.1	1.1	1.1	1.1	1.1	1.1	1.1											
61.4	66.5	71.5	76.5	81.5	—	—	—	—	—	—	—	—	—	—	4.40	18.70	4.33	4.31	5.27	6.73	9.49	*	*	*	*
1.0	1.0	1.0	1.0	1.1	—	—	—	—	—	—	—	—	—	—	*	*									
56.4	61.5	66.5	71.6	76.6	—	—	—	—	—	—	—	—	—	—	5.50	23.60	4.35	6.50	7.97	10.25	14.56	*	*	*	*
1.0	1.0	1.0	1.0	1.0	—	—	—	—	—	—	—	—	—	—	*	*									
58.9	64.0	69.0	74.1	79.1	—	—	—	—	—	—	—	—	—	—	4.90	21.20	4.40	5.31	6.50	8.34	11.81	*	*	*	*
1.0	1.0	1.0	1.0	1.0	—	—	—	—	—	—	—	—	—	—	*	*									
41.3	46.6	51.8	57.0	62.2	68.3	74.5	80.6	87.7	95.3	102.8	112.9	120.5	130.6	140.6	8.50	37.50	4.45	12.29	15.12	19.49	27.61	10.84	13.24	16.85	23.16
0.9	0.9	1.0	1.0	1.0	1.0	1.0	1.0	1.1	1.1	1.1	1.1	1.1	1.1	1.1											
—	—	36.8	42.4	48.0	54.4	60.8	67.1	74.3	82.1	89.8	100.0	107.6	117.8	127.9	11.30	50.00	4.46	17.52	21.54	27.66	38.68	15.95	19.46	24.62	33.04
—	—	0.9	0.9	0.9	1.0	1.0	1.0	1.0	1.0	1.1	1.1	1.1	1.1	1.1											
48.1	53.3	58.4	63.5	68.6	74.7	80.8	86.8	93.9	101.5	109.0	119.1	126.6	136.6	146.7	7.10	31.50	4.49	9.61	11.82	15.24	21.67	8.21	10.02	12.75	17.61
1.0	1.0	1.0	1.0	1.0	1.0	1.0	1.1	1.1	1.1	1.1	1.1	1.1	1.1	1.1											
51.9	57.0	62.1	67.2	72.2	—	—	—	—	—	—	—	—	—	—	6.30	28.00	4.50	8.06	9.91	12.76	18.16	*	*	*	*
1.0	1.0	1.0	1.0	1.0	—	—	—	—	—	—	—	—	—	—	*	*									
56.6	61.7	66.7	71.8	76.8	—	—	—	—	—	—	—	—	—	—	5.20	23.60	4.61	5.90	7.24	9.30	13.19	*	*	*	*
1.0	1.0	1.0	1.0	1.0	—	—	—	—	—	—	—	—	—	—	*	*									

* = Diameters below RMA minimum for other than Cog-Belt V-belts. Use with Super Power-Wedge V-belts will result in reduced life and loss of efficiency.

⚠ **WARNING**** = Sheave Rim Speed in excess of 6500 feet per minute - see Page 236

Arc-Length Correction Factors are located beneath Center Distance Values

POWER-WEDGE PRE-ENGINEERED DRIVE SELECTION TABLES

5V/5VX PRE-ENGINEERED TABLES RATIO 4.62 - 6.45

Driven Speed for Motor Speed of				Sheave Outside Diameters		V-Belt Number and Center Distance (other sizes may be available, see page 214)																				
690 RPM	870 RPM	1160 RPM	1750 RPM	Small Sheave	Large Sheave	Speed Ratio	5VX 500	5VX 530	5VX 560	5VX 600	5VX 630	5VX 670	5VX 710	5VX 750	5VX 800	5VX 850	5VX 900	5VX 950	5VX 1000	5VX 1060	5VX 1120	5VX 1180	5VX 1250	5VX 1320	5VX 1400	5VX 1500
149	188	251	379	10.90	50.00	4.62	—	—	—	—	—	—	—	—	—	—	—	—	—	—	—	—	—	—	—	—
							—	—	—	—	—	—	—	—	—	—	—	—	—	—	—	—	—	—	—	—
149	188	250	377	4.65	21.20	4.64	—	—	—	—	—	—	—	14.9	17.8	20.5	23.2	25.9	28.5	31.6	34.7	37.8	41.4	44.9	49.0	54.1
			*	*			—	—	—	—	—	—	—	0.7	0.8	0.8	0.8	0.9	0.9	0.9	0.9	0.9	0.9	1.0	1.0	1.0
146	184	245	370	8.00	37.50	4.73	—	—	—	—	—	—	—	—	—	—	—	—	—	—	—	—	-0.0	26.1	30.7	36.3
							—	—	—	—	—	—	—	—	—	—	—	—	—	—	—	—	—	0.8	0.8	0.9
145	183	244	368	6.70	31.50	4.76	—	—	—	—	—	—	—	—	—	—	—	—	—	—	22.6	26.0	29.9	33.7	38.0	43.2
			*	*			—	—	—	—	—	—	—	—	—	—	—	—	—	—	0.8	0.8	0.9	0.9	0.9	0.9
143	181	241	364	5.90	28.00	4.81	—	—	—	—	—	—	—	—	—	—	—	—	20.4	23.8	27.1	30.4	34.1	37.8	41.9	47.1
			*	*			—	—	—	—	—	—	—	—	—	—	—	—	0.8	0.8	0.9	0.9	0.9	0.9	0.9	1.0
141	178	237	358	10.30	50.00	4.89	—	—	—	—	—	—	—	—	—	—	—	—	—	—	—	—	—	—	—	—
							—	—	—	—	—	—	—	—	—	—	—	—	—	—	—	—	—	—	—	—
141	178	237	357	4.90	23.60	4.90	—	—	—	—	—	—	—	—	—	17.6	20.5	23.2	25.9	29.1	32.3	35.4	39.0	42.6	46.7	51.8
			*	*			—	—	—	—	—	—	—	—	—	0.8	0.8	0.8	0.9	0.9	0.9	0.9	0.9	0.9	1.0	1.0
141	177	236	357	4.40	21.20	4.91	—	—	—	—	—	—	—	15.0	17.9	20.7	23.4	26.0	28.7	31.8	34.9	38.0	41.5	45.1	49.2	54.2
			*	*			—	—	—	—	—	—	—	0.7	0.8	0.8	08	0.9	0.9	0.9	0.9	0.9	0.9	1.0	1.0	1.0
137	172	230	346	7.50	37.50	5.05	—	—	—	—	—	—	—	—	—	—	—	—	—	—	—	—	—	26.4	31.0	36.6
							—	—	—	—	—	—	—	—	—	—	—	—	—	—	—	—	—	0.8	0.8	0.9
136	172	229	346	6.30	31.50	5.06	—	—	—	—	—	—	—	—	—	—	—	—	—	—	22.8	26.3	30.2	34.0	38.2	43.5
			*	*			—	—	—	—	—	—	—	—	—	—	—	—	—	—	0.8	0.8	0.9	0.9	0.9	0.9
134	168	225	339	4.65	23.60	5.16	—	—	—	—	—	—	—	—	—	17.8	20.6	23.4	26.1	29.3	32.4	35.5	39.2	42.8	46.9	51.9
			*	*			—	—	—	—	—	—	—	—	—	0.8	0.8	0.8	0.9	0.9	0.9	0.9	0.9	0.9	1.0	1.0
134	168	225	339	5.50	28.00	5.17	—	—	—	—	—	—	—	—	—	—	—	—	20.6	24.1	27.4	30.6	34.3	38.0	42.2	47.4
			*	*			—	—	—	—	—	—	—	—	—	—	—	—	0.8	0.8	0.8	0.9	0.9	0.9	0.9	1.0
133	168	224	338	9.75	50.00	5.17	—	—	—	—	—	—	—	—	—	—	—	—	—	—	—	—	—	—	—	—
							—	—	—	—	—	—	—	—	—	—	—	—	—	—	—	—	—	—	—	—
129	163	217	328	7.10	37.50	5.34	—	—	—	—	—	—	—	—	—	—	—	—	—	—	—	—	—	26.6	31.3	36.8
							—	—	—	—	—	—	—	—	—	—	—	—	—	—	—	—	—	0.8	0.8	0.9
127	161	214	323	5.90	31.50	5.41	—	—	—	—	—	—	—	—	—	—	—	—	—	—	23.1	26.5	30.4	34.2	38.5	43.8
			*	*			—	—	—	—	—	—	—	—	—	—	—	—	—	—	0.8	0.8	0.9	0.9	0.9	0.9
127	160	213	321	9.25	50.00	5.45	—	—	—	—	—	—	—	—	—	—	—	—	—	—	—	—	—	—	—	—
							—	—	—	—	—	—	—	—	—	—	—	—	—	—	—	—	—	—	—	—
126	159	212	320	4.40	23.60	5.47	—	—	—	—	—	—	—	—	—	17.9	20.8	23.6	26.3	29.4	32.6	35.7	39.3	42.9	47.0	52.1
			*	*			—	—	—	—	—	—	—	—	—	0.8	0.8	0.8	0.9	0.9	0.9	0.9	0.9	0.9	1.0	1.0
126	159	212	320	5.20	28.00	5.47	—	—	—	—	—	—	—	—	—	—	—	—	20.8	24.2	27.6	30.8	34.5	38.2	42.4	47.6
			*	*			—	—	—	—	—	—	—	—	—	—	—	—	0.8	0.8	0.8	0.9	0.9	0.9	0.9	1.0
123	155	207	312	9.00	50.00	5.61	—	—	—	—	—	—	—	—	—	—	—	—	—	—	—	—	—	—	—	—
							—	—	—	—	—	—	—	—	—	—	—	—	—	—	—	—	—	—	—	—
122	154	205	309	6.70	37.50	5.67	—	—	—	—	—	—	—	—	—	—	—	—	—	—	—	—	—	26.9	31.5	37.1
			*	*			—	—	—	—	—	—	—	—	—	—	—	—	—	—	—	—	—	0.8	0.8	0.9
119	150	200	301	4.90	28.00	5.81	—	—	—	—	—	—	—	—	—	—	—	—	21.0	24.4	27.8	31.0	34.7	38.4	42.6	47.8
			*	*			—	—	—	—	—	—	—	—	—	—	—	—	0.8	0.8	0.8	0.9	0.9	0.9	0.9	1.0
119	150	200	301	4.90	28.00	5.81	—	—	—	—	—	—	—	—	—	—	—	—	21.0	24.4	27.8	31.0	34.7	38.4	42.6	47.8
			*	*			—	—	—	—	—	—	—	—	—	—	—	—	0.8	0.8	0.8	0.9	0.9	0.9	0.9	1.0
119	150	199	301	5.50	31.50	5.81	—	—	—	—	—	—	—	—	—	—	—	—	—	—	23.3	26.8	30.7	34.5	38.8	44.0
			*	*			—	—	—	—	—	—	—	—	—	—	—	—	—	—	0.8	0.8	0.9	0.9	0.9	0.9
116	146	195	295	8.50	50.00	5.94	—	—	—	—	—	—	—	—	—	—	—	—	—	—	—	—	—	—	—	—
							—	—	—	—	—	—	—	—	—	—	—	—	—	—	—	—	—	—	—	—
114	144	192	290	6.30	37.50	6.03	—	—	—	—	—	—	—	—	—	—	—	—	—	—	—	—	—	27.1	31.8	37.3
			*	*			—	—	—	—	—	—	—	—	—	—	—	—	—	—	—	—	—	0.8	0.8	0.9
112	141	188	284	5.20	31.50	6.16	—	—	—	—	—	—	—	—	—	—	—	—	—	—	23.5	27.0	30.9	34.7	39.0	44.2
			*	*			—	—	—	—	—	—	—	—	—	—	—	—	—	—	0.8	0.8	0.9	0.9	0.9	0.9
109	138	184	277	8.00	50.00	6.32	—	—	—	—	—	—	—	—	—	—	—	—	—	—	—	—	—	—	—	—
							—	—	—	—	—	—	—	—	—	—	—	—	—	—	—	—	—	—	—	—
107	135	180	271	5.90	37.50	6.45	—	—	—	—	—	—	—	—	—	—	—	—	—	—	—	—	—	27.3	32.0	37.6
			*	*			—	—	—	—	—	—	—	—	—	—	—	—	—	—	—	—	—	0.8	0.8	0.9

* = Diameters below RMA minimum for other than Cog-Belt V-belts. Use with Super Power-Wedge V-belts will result in reduced life and loss of efficiency.

⚠ **WARNING**** = Sheave Rim Speed in excess of 6500 feet per minute - see Page 236

Arc-Length Correction Factors are located beneath Center Distance Values

POWER-WEDGE PRE-ENGINEERED DRIVE SELECTION TABLES

5V/5VX PRE-ENGINEERED TABLES — RATIO 4.62 - 6.45

V-Belt Number and Center Distance (Other sizes may be available, see page 214)																		Rated HP per Belt (Includes Added HP for Speed Ratio) Power-Wedge Cog-Belt (5VX) RPM of Small Sheave				Rated HP per Belt (Includes Added HP for Speed Ratio) Super Power-Wedge Belt (5V) RPM of Small Sheave			
5VX 1600	5VX 1700	5VX 1800	5VX 1900	5VX 2000	5V 2120	5V 2240	5V 2360	5V 2500	5V 2650	5V 2800	5V 3000	5V 3150	5V 3350	5V 3550	Small Sheave	Large Sheave	Speed Ratio	690 RPM	870 RPM	1160 RPM	1750 RPM	690 RPM	870 RPM	1160 RPM	1170 RPM
—	—	37.0	42.7	48.2	54.7	61.0	67.3	74.6	82.3	90.0	100.3	107.9	118.1	128.2	10.90	50.00	4.62	16.78	20.64	26.52	37.17	15.24	18.59	23.55	31.74
—	—	0.9	0.9	0.9	1.0	1.0	1.0	1.0	1.0	1.1	1.1	1.1	1.1	1.1											
59.1	64.2	69.2	74.2	79.3	—	—	—	—	—	—	—	—	—	—	4.85	21.20	4.54	4.81	5.89	7.54	10.66	*	*	*	*
1.0	1.0	1.0	1.0	1.0	—	—	—	—	—	—	—	—	—	—	*	*									
41.7	46.9	52.2	57.4	62.5	68.7	74.8	80.9	88.0	95.6	103.2	113.3	120.9	130.9	141.0	8.00	37.50	4.73	11.34	13.95	17.98	25.52	*	*	*	*
0.9	0.9	1.0	1.0	1.0	1.0	1.0	1.0	1.1	1.1	1.1	1.1	1.1	1.1	1.1											
48.6	53.6	58.7	63.8	68.9	—	—	—	—	—	—	—	—	—	—	6.70	31.50	4.76	8.84	10.87	14.01	19.92	*	*	*	*
1.0	1.0	1.0	1.0	1.0	—	—	—	—	—	—	—	—	—	—	*	*									
52.2	57.3	62.4	67.5	72.5	—	—	—	—	—	—	—	—	—	—	5.90	28.00	4.81	7.28	8.94	11.51	16.37	*	*	*	*
1.0	1.0	1.0	1.0	1.0	—	—	—	—	—	—	—	—	—	—	*	*									
—	—	37.4	43.1	48.6	55.1	61.4	67.7	75.0	82.8	90.5	100.7	108.3	118.5	128.6	10.30	50.00	4.89	15.67	19.27	24.79	34.86	14.15	17.27	21.92	29.71
—	—	0.9	0.9	0.9	1.0	1.0	1.0	1.0	1.0	1.1	1.1	1.1	1.1	1.1											
56.8	61.9	67.0	72.0	77.0	—	—	—	—	—	—	—	—	—	—	4.90	23.60	4.90	5.31	6.50	8.34	11.81	*	*	*	*
1.0	1.0	1.0	1.0	1.0	—	—	—	—	—	—	—	—	—	—	*	*									
59.3	64.3	69.4	74.4	79.4	—	—	—	—	—	—	—	—	—	—	4.40	21.20	4.91	4.31	5.27	6.73	9.49	*	*	*	*
1.0	1.0	1.0	1.0	1.0	—	—	—	—	—	—	—	—	—	—	*	*									
42.0	47.3	52.5	57.7	62.9	69.0	75.2	81.3	88.4	96.0	103.6	113.7	121.2	131.3	141.4	7.50	37.50	5.05	10.38	12.77	16.47	23.39	8.97	10.95	13.93	19.23
0.9	0.9	1.0	1.0	1.0	1.0	1.0	1.0	1.1	1.1	1.1	1.1	1.1	1.1	1.1											
48.7	53.8	59.0	64.1	69.2	—	—	—	—	—	—	—	—	—	—	6.30	31.50	5.06	8.06	9.91	12.76	18.16	*	*	*	*
1.0	1.0	1.0	1.0	1.0	—	—	—	—	—	—	—	—	—	—	*	*									
57.0	62.1	67.1	72.2	77.2	—	—	—	—	—	—	—	—	—	—	4.65	23.60	5.16	4.81	5.89	7.54	10.66	*	*	*	*
1.0	1.0	1.0	1.0	1.0	—	—	—	—	—	—	—	—	—	—	*	*									
52.5	57.6	62.7	67.8	72.8	—	—	—	—	—	—	—	—	—	—	5.50	28.00	5.17	6.50	7.97	10.25	14.56	*	*	*	*
1.0	1.0	1.0	1.0	1.0	—	—	—	—	—	—	—	—	—	—	*	*									
—	31.7	37.7	43.4	48.9	55.4	61.8	68.1	75.4	83.1	90.8	101.1	108.7	118.9	129.0	9.75	50.00	5.17	14.64	18.02	23.19	32.70	*	*	*	*
—	0.8	0.9	0.9	0.9	1.0	1.0	1.0	1.0	1.0	1.1	1.1	1.1	1.1	1.1											
42.2	47.5	52.8	58.0	63.1	69.3	75.4	81.6	88.7	96.3	103.9	114.0	121.5	131.6	141.7	7.10	37.50	5.34	9.61	11.82	15.24	21.67	8.21	10.02	12.75	17.61
0.9	0.9	1.0	1.0	1.0	1.0	1.0	1.0	1.1	1.1	1.1	1.1	1.1	1.1	1.1											
49.0	54.1	59.2	64.4	69.4	—	—	—	—	—	—	—	—	—	—	5,90	31.50	5.41	7.28	8.94	11.51	16.37	*	*	*	*
1.0	1.0	1.0	1.0	1.0	—	—	—	—	—	—	—	—	—	—	*	*									
—	32.0	38.0	43.7	49.3	55.7	62.1	68.4	75.7	83.5	91.2	101.4	109.1	119.2	129.4	9.25	50.00	5.45	13.70	16.86	21.72	30.69	12.23	14.94	18.99	25.97
—	0.8	0.9	0.9	0.9	1.0	1.0	1.0	1.0	1.0	1.1	1.1	1.1	1.1	1.1											
57.2	62.3	67.3	72.4	77.4	—	—	—	—	—	—	—	—	—	—	4.40	23.60	5.47	4.31	5.27	6.73	9.49	*	*	*	*
1.0	1.0	1.0	1.0	1.0	—	—	—	—	—	—	—	—	—	—	*	*									
52.7	57.8	62.9	68.0	73.0	—	—	—	—	—	—	—	—	—	—	5.20	28.00	5.47	5.90	7.24	9.30	13.19	*	*	*	*
1.0	1.0	1.0	1.0	1.0	—	—	—	—	—	—	—	—	—	—	*	*									
—	32.1	38.2	43.9	49.4	55.9	62.3	68.6	75.9	83.6	91.4	101.6	109.2	119.4	129.5	9.00	50.00	5.61	13.23	16.29	20.98	29.67	11.77	14.38	18.29	25.05
—	0.8	0.9	0.9	0.9	1.0	1.0	1.0	1.0	1.0	1.1	1.1	1.1	1.1	1.1											
42.5	47.8	53.1	58.2	63.4	—	—	—	—	—	—	—	—	—	—	6.70	37.50	5.67	8.84	10.87	14.01	19.92	*	*	*	*
0.9	0.9	1.0	1.0	1.0	—	—	—	—	—	—	—	—	—	—	*	*									
52.9	58.0	63.1	68.2	73.2	—	—	—	—	—	—	—	—	—	—	4.90	28.00	5.81	5.31	6.50	8.34	11.81	*	*	*	*
1.0	1.0	1.0	1.0	1.0	—	—	—	—	—	—	—	—	—	—	*	*									
52.9	58.0	63.1	68.2	73.2	—	—	—	—	—	—	—	—	—	—	4.90	28.00	5.81	5.31	6.50	8.34	11.81	*	*	*	*
1.0	1.0	1.0	1.0	1.0	—	—	—	—	—	—	—	—	—	—	*	*									
49.2	54.4	59.5	64.6	69.7	—	—	—	—	—	—	—	—	—	—	5.50	31.50	5.81	6.50	7.97	10.25	14.56	*	*	*	*
1.0	1.0	1.0	1.0	1.0	—	—	—	—	—	—	—	—	—	—	*	*									
—	32.4	38.5	44.2	49.7	56.2	62.6	68.9	76.2	84.0	91.7	101.9	109.6	119.8	129.9	8.50	50.00	5.94	12.29	15.12	19.49	27.61	10.84	13.24	16.85	23.16
—	0.8	0.8	0.9	0.9	1.0	1.0	1.0	1.0	1.0	1.1	1.1	1.1	1.1	1.1											
42.8	48.1	53.3	58.5	63.7	—	—	—	—	—	—	—	—	—	—	6.30	37.50	6.03	8.06	9.91	12.76	18.16	*	*	*	*
0.9	0.9	1.0	1.0	1.0	—	—	—	—	—	—	—	—	—	—	*	*									
49.4	54.6	59.7	64.8	69.9	—	—	—	—	—	—	—	—	—	—	5.20	31.50	6.16	5.90	7.24	9.30	13.19	*	*	*	*
1.0	1.0	1.0	1.0	1.0	—	—	—	—	—	—	—	—	—	—	*	*									
—	32.7	38.8	44.5	50.0	56.5	62.9	69.3	76.6	84.3	92.1	102.3	109.9	120.1	130.3	8.00	50.00	6.32	11.34	13.95	17.98	25.52	9.91	12.10	15.40	21.22
—	0.8	0.8	0.9	0.9	1.0	1.0	1.0	1.0	1.0	1.1	1.1	1.1	1.1	1.1											
43.0	48.3	53.6	58.8	64.0	—	—	—	—	—	—	—	—	—	—	5.90	37.50	6.45	7.28	8.94	11.51	16.37	*	*	*	*
0.9	0.9	1.0	1.0	1.0	—	—	—	—	—	—	—	—	—	—	*	*									

* = Diameters below RMA minimum for other than Cog-Belt V-belts. Use with Super Power-Wedge V-belts will result in reduced life and loss of efficiency.

⚠ **WARNING**** = Sheave Rim Speed in excess of 6500 feet per minute - see Page 236

Arc-Length Correction Factors are located beneath Center Distance Values

POWER-WEDGE PRE-ENGINEERED DRIVE SELECTION TABLES

5V/5VX PRE-ENGINEERED TABLES RATIO 6.49 - 11.60

Driven Speed for Motor Speed of				Sheave Outside Diameters		V-Belt Number and Center Distance (other sizes may be available, see page 214)																				
690 RPM	870 RPM	1160 RPM	1750 RPM	Small Sheave	Large Sheave	Speed Ratio	5VX 500	5VX 530	5VX 560	5VX 600	5VX 630	5VX 670	5VX 710	5VX 750	5VX 800	5VX 850	5VX 900	5VX 950	5VX 1000	5VX 1060	5VX 1120	5VX 1180	5VX 1250	5VX 1320	5VX 1400	5VX 1500
106	134	179	270	4.40	28.00	6.49	—	—	—	—	—	—	—	—	—	—	—	18.2	21.3	24.7	28.1	31.3	35.1	38.8	42.9	48.1
				*	*		—	—	—	—	—	—	—	—	—	—	—	0.7	0.8	0.8	0.8	0.9	0.9	0.9	0.9	1.0
105	133	177	268	4.90	31.50	6.54	—	—	—	—	—	—	—	—	—	—	—	—	—	20.0	23.7	27.2	31.1	34.9	39.2	44.4
				*	*		—	—	—	—	—	—	—	—	—	—	—	—	—	0.7	0.8	0.8	0.9	0.9	0.9	0.9
100	126	168	254	4.65	31.50	6.90	—	—	—	—	—	—	—	—	—	—	—	—	—	20.1	23.8	27.3	31.2	35.0	39.3	44.6
				*	*		—	—	—	—	—	—	—	—	—	—	—	—	—	0.7	0.8	0.8	0.9	0.9	0.9	0.9
102	129	172	260	7.50	50.00	6.74	—	—	—	—	—	—	—	—	—	—	—	—	—	—	—	—	—	—	—	—
							—	—	—	—	—	—	—	—	—	—	—	—	—	—	—	—	—	—	—	—
100	126	167	253	5.50	37.50	6.93	—	—	—	—	—	—	—	—	—	—	—	—	—	—	—	—	23.2	27.8	32.3	37.8
				*	*		—	—	—	—	—	—	—	—	—	—	—	—	—	—	—	—	0.7	0.8	0.8	0.9
97	122	163	245	7.10	50.00	7.13	—	—	—	—	—	—	—	—	—	—	—	—	—	—	—	—	—	—	—	—
							—	—	—	—	—	—	—	—	—	—	—	—	—	—	—	—	—	—	—	—
94	119	159	240	4.40	31.50	7.30	—	—	—	—	—	—	—	—	—	—	—	—	—	20.3	24.0	27.5	31.4	35.2	39.5	44.8
				*	*		—	—	—	—	—	—	—	—	—	—	—	—	—	0.7	0.8	0.8	0.9	0.9	0.9	0.9
94	119	158	239	5.20	37.50	7.33	—	—	—	—	—	—	—	—	—	—	—	—	—	—	—	—	23.4	27.8	32.4	38.0
				*	*		—	—	—	—	—	—	—	—	—	—	—	—	—	—	—	—	0.7	0.8	0.8	0.9
91	115	153	231	6.70	50.00	7.56	—	—	—	—	—	—	—	—	—	—	—	—	—	—	—	—	—	—	—	—
				*	*		—	—	—	—	—	—	—	—	—	—	—	—	—	—	—	—	—	—	—	—
89	112	149	225	4.90	37.50	7.79	—	—	—	—	—	—	—	—	—	—	—	—	—	—	—	—	23.6	27.9	32.6	38.2
				*	*		—	—	—	—	—	—	—	—	—	—	—	—	—	—	—	—	0.7	0.8	0.8	0.9
89	112	149	225	4.90	37.50	7.79	—	—	—	—	—	—	—	—	—	—	—	—	—	—	—	—	23.6	27.9	32.6	38.2
				*	*		—	—	—	—	—	—	—	—	—	—	—	—	—	—	—	—	0.7	0.8	0.8	0.9
86	108	144	217	6.30	50.00	8.05	—	—	—	—	—	—	—	—	—	—	—	—	—	—	—	—	—	—	—	—
				*	*		—	—	—	—	—	—	—	—	—	—	—	—	—	—	—	—	—	—	—	—
80	101	135	203	5.90	50.00	8.60	—	—	—	—	—	—	—	—	—	—	—	—	—	—	—	—	—	—	—	—
				*	*		—	—	—	—	—	—	—	—	—	—	—	—	—	—	—	—	—	—	—	—
79	100	133	201	4.40	37.50	8.70	—	—	—	—	—	—	—	—	—	—	—	—	—	—	—	—	23.8	28.2	32.9	38.5
				*	*		—	—	—	—	—	—	—	—	—	—	—	—	—	—	—	—	0.7	0.8	0.8	0.9
75	94	126	189	5.50	50.00	9.24	—	—	—	—	—	—	—	—	—	—	—	—	—	—	—	—	—	—	—	—
				*	*		—	—	—	—	—	—	—	—	—	—	—	—	—	—	—	—	—	—	—	—
71	89	119	179	5.20	50.00	9.78	—	—	—	—	—	—	—	—	—	—	—	—	—	—	—	—	—	—	—	—
				*	*		—	—	—	—	—	—	—	—	—	—	—	—	—	—	—	—	—	—	—	—
66	84	112	168	4.90	50.00	10.40	—	—	—	—	—	—	—	—	—	—	—	—	—	—	—	—	—	—	—	—
				*	*		—	—	—	—	—	—	—	—	—	—	—	—	—	—	—	—	—	—	—	—
59	75	100	151	4.40	50.00	11.60	—	—	—	—	—	—	—	—	—	—	—	—	—	—	—	—	—	—	—	—
				*	*		—	—	—	—	—	—	—	—	—	—	—	—	—	—	—	—	—	—	—	—

* = Diameters below RMA minimum for other than Cog-Belt V-belts. Use with Super Power-Wedge V-belts will result in reduced life and loss of efficiency.

⚠**WARNING**** = Sheave Rim Speed in excess of 6500 feet per minute - see Page 236

Arc-Length Correction Factors are located beneath Center Distance Values

POWER-WEDGE PRE-ENGINEERED DRIVE SELECTION TABLES

5V/5VX PRE-ENGINEERED TABLES RATIO 6.49 - 11.60

V-Belt Number and Center Distance (Other sizes may be available, see page 214)																		Rated HP per Belt (Includes Added HP for Speed Ratio) Power-Wedge Cog-Belt (5VX) RPM of Small Sheave				Rated HP per Belt (Includes Added HP for Speed Ratio) Super Power-Wedge Belt (5V) RPM of Small Sheave			
5VX 1600	5VX 1700	5VX 1800	5VX 1900	5VX 2000	5V 2120	5V 2240	5V 2360	5V 2500	5V 2650	5V 2800	5V 3000	5V 3150	5V 3350	5V 3550	Small Sheave	Large Sheave	Speed Ratio	690 RPM	870 RPM	1160 RPM	1750 RPM	690 RPM	870 RPM	1160 RPM	1170 RPM
53.2	58.4	63.5	68.5	73.6	—	—	—	—	—	—	—	—	—	—	4.40	28.00	6.49	4.31	5.27	6.73	9.49	*	*	*	*
1.0	1.0	1.0	1.0	1.0	—	—	—	—	—	—	—	—	—	—	*	*									
49.5	54.8	59.9	65.1	70.2	—	—	—	—	—	—	—	—	—	—	4.90	31.50	6.54	5.31	6.50	8.34	11.81	*	*	*	*
1.0	1.0	1.0	1.0	1.0	—	—	—	—	—	—	—	—	—	—	*	*									
48.8	55.0	60.1	65.2	70.3	—	—	—	—	—	—	—	—	—	—	4.65	31.50	6.90	4.81	5.89	7.54	10.66	*	*	*	*
1.0	1.0	1.0	1.0	1.0	—	—	—	—	—	—	—	—	—	—	*	*									
—	33.0	39.1	44.8	50.4	56.9	63.3	69.6	76.9	84.7	92.4	102.6	110.3	120.5	130.6	7.50	50.00	6.74	10.38	12.77	16.47	23.39	8.97	10.95	13.93	19.23
—	0.8	0.8	0.9	0.9	1.0	1.0	1.0	1.0	1.0	1.1	1.1	1.1	1.1	1.1											
43.3	46.6	53.9	59.1	64.2	—	—	—	—	—	—	—	—	—	—	5.50	37.50	6.93	6.50	7.97	10.25	14.56	*	*	*	*
0.9	0.9	1.0	1.0	1.0	—	—	—	—	—	—	—	—	—	—	*	*									
—	33.2	39.3	45.0	50.6	57.1	63.5	69.9	77.2	84.9	92.7	102.9	110.6	120.7	130.8	7.10	50.00	7.13	9.61	11.82	15.24	21.67	8.21	10.02	12.75	17.61
—	0.8	0.8	0.9	0.9	1.0	1.0	1.0	1.0	1.0	1.1	1.1	1.1	1.1	1.1											
50.0	55.1	60.3	65.4	70.5	—	—	—	—	—	—	—	—	—	—	4.40	31.50	7.30	4.31	5.27	8.73	9.49	*	*	*	*
1.0	1.0	1.0	1.0	1.0	—	—	—	—	—	—	—	—	—	—	*	*									
43.5	48.8	54.1	59.3	64.4	—	—	—	—	—	—	—	—	—	—	5.20	37.50	7.33	5.90	7.24	9.30	13.19	*	*	*	*
0.9	0.9	1.0	1.0	1.0	—	—	—	—	—	—	—	—	—	—	*	*									
—	33.5	39.5	45.3	50.9	—	—	—	—	—	—	—	—	—	—	6.70	50.00	7.56	8.84	10.87	14.01	19.92	*	*	*	*
—	0.8	0.8	0.9	0.9	—	—	—	—	—	—	—	—	—	—	*	*									
43.7	49.0	54.3	59.5	64.6	—	—	—	—	—	—	—	—	—	—	4.90	37.50	7.79	5.31	6.50	8.34	11.81	*	*	*	*
0.9	0.9	1.0	1.0	1.0	—	—	—	—	—	—	—	—	—	—	*	*									
43.7	49.0	54.3	59.5	64.6	—	—	—	—	—	—	—	—	—	—	4.90	37.50	7.79	5.31	6.50	8.34	11.81	*	*	*	*
0.9	0.9	1.0	1.0	1.0	—	—	—	—	—	—	—	—	—	—	*	*									
—	33.7	39.8	45.5	51.1	—	—	—	—	—	—	—	—	—	—	6.30	50.00	8.05	8.06	9.91	12.76	18.16	*	*	*	*
—	0.8	0.8	0.9	0.9	—	—	—	—	—	—	—	—	—	—	*	*									
—	33.9	40.0	45.8	51.4	—	—	—	—	—	—	—	—	—	—	5.90	50.00	8.60	7.28	8.94	11.51	16.37	*	*	*	*
—	0.8	0.8	0.9	0.9	—	—	—	—	—	—	—	—	—	—	*	*									
44.0	49.3	54.6	59.8	65.0	—	—	—	—	—	—	—	—	—	—	4.40	37.50	8.70	4.31	5.27	6.73	9.49	*	*	*	*
0.9	0.9	1.0	1.0	1.0	—	—	—	—	—	—	—	—	—	—	*	*									
—	34.2	40.3	46.0	51.6	—	—	—	—	—	—	—	—	—	—	5.50	50.00	9.24	6.50	7.97	10.25	14.56	*	*	*	*
—	0.8	0.8	0.9	0.9	—	—	—	—	—	—	—	—	—	—	*	*									
—	34.3	40.4	46.2	51.8	—	—	—	—	—	—	—	—	—	—	5.20	50.00	9.78	5.90	7.24	9.30	13.19	*	*	*	*
—	0.8	0.8	0.9	0.9	—	—	—	—	—	—	—	—	—	—	*	*									
—	34.5	40.6	46.4	52.0	—	—	—	—	—	—	—	—	—	—	4.90	50.00	10.40	5.31	6.50	8.34	11.81	*	*	*	*
—	0.8	0.8	0.9	0.9	—	—	—	—	—	—	—	—	—	—	*	*									
—	34.8	40.9	46.7	52.3	—	—	—	—	—	—	—	—	—	—	4.40	50.00	11.60	4.31	5.27	6.73	9.49	*	*	*	*
—	0.8	0.8	0.9	0.9	—	—	—	—	—	—	—	—	—	—	*	*									

* = Diameters below RMA minimum for other than Cog-Belt V-belts. Use with Super Power-Wedge V-belts will result in reduced life and loss of efficiency.

⚠**WARNING**** = Sheave Rim Speed in excess of 6500 feet per minute - see Page 236

Arc-Length Correction Factors are located beneath Center Distance Values

POWER-WEDGE PRE-ENGINEERED DRIVE SELECTION TABLES

8V/8VX PRE-ENGINEERED TABLES Ratio 1.00-1.12

Driven Speed for Motor Speed of	Sheave Outside Diameters			V-Belt Number and Center Distance (Other sizes may be available, see page 214)															
1750 RPM	Small Sheave	Large Sheave	Speed Ratio	8VX 1000	8VX 1060	8VX 1120	8VX 1180	8VX 1250	8VX 1320	8VX 1400	8VX 1500	8VX 1600	8VX 1700	8VX 1900	8VX 1800	8VX 2000	8V 2120	8V 2240	8V 2360
1750	12.50	12.50	1.00	30.4	33.4	36.4	39.4	42.9	46.4	50.4	55.4	60.4	65.4	70.4	75.4	80.4	86.4	92.4	98.4
				0.9	0.9	0.9	0.9	0.9	0.9	0.9	0.9	0.9	0.9	1.0	1.0	1.0	1.0	1.0	1.0
1750	13.30	13.20	1.00	29.3	32.3	35.3	38.3	41.8	45.3	49.3	54.3	59.3	64.3	69.3	74.3	79.3	85.3	91.3	97.3
				0.9	0.9	0.9	0.9	0.9	0.9	0.9	0.9	0.9	0.9	1.0	1.0	1.0	1.0	1.0	1.0
1750	14.00	14.00	1.00	28.0	31.0	34.0	37.0	40.5	44.0	48.0	53.0	58.0	63.0	68.0	73.0	78.0	84.0	90.0	96.0
				0.9	0.9	0.9	0.9	0.9	0.9	0.9	0.9	0.9	0.9	1.0	1.0	1.0	1.0	1.0	1.0
1750	15.00	15.00	1.00	26.4	29.4	32.4	35.4	38.9	42.4	46.4	51.4	56.4	61.4	66.4	71.4	76.4	82.4	88.4	94.4
				0.9	0.9	0.9	0.9	0.9	0.9	0.9	0.9	0.9	0.9	1.0	1.0	1.0	1.0	1.0	1.0
1750	16.00	16.00	1.00	24.9	27.9	30.9	33.9	37.4	40.9	44.9	49.9	54.9	59.9	64.9	69.9	74.9	80.9	86.9	92.9
				0.9	0.9	0.9	0.9	0.9	0.9	0.9	0.9	0.9	0.9	1.0	1.0	1.0	1.0	1.0	1.0
1750	17.00	17.00	1.00	23.3	26.3	29.3	32.3	35.8	39.3	43.3	48.3	53.3	58.3	63.3	68.3	73.3	79.3	85.3	91.3
				0.9	0.9	0.9	0.9	0.9	0.9	0.9	0.9	0.9	0.9	1.0	1.0	1.0	1.0	1.0	1.0
1750	18.00	18.00	1.00	21.7	24.7	27.7	30.7	34.2	37.7	41.7	46.7	51.7	56.7	61.7	66.7	71.7	77.7	83.7	89.7
				0.9	0.9	0.9	0.9	0.9	0.9	0.9	0.9	0.9	0.9	1.0	1.0	1.0	1.0	1.0	1.0
1750	19.00	19.00	1.00	—	23.2	26.2	29.2	32.7	36.2	40.2	45.2	50.2	55.2	60.2	65.2	70.2	76.2	82.2	88.2
				0.9	0.9	0.9	0.9	0.9	0.9	0.9	0.9	0.9	0.9	1.0	1.0	1.0	1.0	1.0	1.0
1750	20.00	20.00	1.00	—	21.6	24.6	27.6	31.1	34.6	38.6	43.6	48.6	53.6	58.6	63.6	68.6	74.6	80.6	86.6
				0.9	0.9	0.9	0.9	0.9	0.9	0.9	0.9	0.9	0.9	1.0	1.0	1.0	1.0	1.0	1.0
1750	21.20	21.20	1.00	—	—	—	25.7	29.2	32.7	36.7	41.7	46.7	51.7	56.7	61.7	66.7	72.7	78.7	84.7
				—	—	—	0.9	0.9	0.9	0.9	0.9	0.9	0.9	1.0	1.0	1.0	1.0	1.0	1.0
1750	22.40	22.40	1.00	—	—	—	—	27.3	30.8	34.8	39.8	44.8	49.8	54.8	59.8	64.8	70.8	76.8	82.8
				—	—	—	—	0.9	0.9	0.9	0.9	0.9	0.9	1.0	1.0	1.0	1.0	1.0	1.0
1750	22.40	22.40	1.00	—	—	—	—	27.3	30.8	34.8	39.8	44.8	49.8	54.8	59.8	64.8	70.8	76.8	82.8
				—	—	—	—	0.9	0.9	0.9	0.9	0.9	0.9	1.0	1.0	1.0	1.0	1.0	1.0
1622	19.00	20.00	1.05	—	22.4	25.4	28.4	31.9	35.4	39.4	44.4	49.4	54.4	59.4	64.4	69.4	75.4	81.4	87.4
				—	0.9	0.9	0.9	0.9	0.9	0.9	0.9	0.9	0.9	1.0	1.0	1.0	1.0	1.0	1.0
1657	18.00	19.00	1.06	20.9	23.9	26.9	29.9	33.4	36.9	40.9	45.9	50.9	55.9	60.9	65.9	70.9	76.9	82.9	88.9
				0.9	0.9	0.9	0.9	0.9	0.9	0.9	0.9	0.9	0.9	1.0	1.0	1.0	1.0	1.0	1.0
1656	12.50	13.20	1.06	29.8	32.8	35.8	38.8	42.3	45.8	49.8	54.8	59.8	64.8	69.8	74.8	79.8	85.8	91.8	97.8
				0.9	0.9	0.9	0.9	0.9	0.9	0.9	0.9	0.9	0.9	1.0	1.0	1.0	1.0	1.0	1.0
1655	21.20	22.40	1.06	—	—	—	24.7	28.3	31.8	35.8	40.8	45.8	50.8	55.8	60.8	65.8	71.8	77.8	83.8
				—	—	—	0.9	0.9	0.9	0.9	0.9	0.9	0.9	0.9	1.0	1.0	1.0	1.0	1.0
1652	17.00	18.00	1.06	22.5	25.5	28.5	31.5	35.0	38.5	42.5	47.5	52.5	57.5	62.5	67.5	72.5	78.5	84.5	90.5
				0.9	0.9	0.9	0.9	0.9	0.9	0.9	0.9	0.9	0.9	1.0	1.0	1.0	1.0	1.0	1.0
1650	20.00	21.20	1.06	—	—	23.6	26.6	30.1	33.6	37.6	42.6	47.6	52.6	57.6	62.6	67.6	73.6	79.6	85.6
				—	—	0.9	0.9	0.9	0.9	0.9	0.9	0.9	0.9	0.9	1.0	1.0	1.0	1.0	1.0
1649	13.20	14.00	1.06	28.6	31.6	34.6	37.6	41.1	44.6	48.6	53.6	58.6	63.6	68.6	73.6	78.6	84.6	90.6	96.6
				0.9	0.9	0.9	0.9	0.9	0.9	0.9	0.9	0.9	0.9	1.0	1.0	1.0	1.0	1.0	1.0
1646	16.00	17.00	1.06	24.1	27.1	30.1	33.1	36.6	40.1	44.1	49.1	54.1	59.1	64.1	69.1	74.1	80.1	86.1	92.1
				0.9	0.9	0.9	0.9	0.9	0.9	0.9	0.9	0.9	0.9	1.0	1.0	1.0	1.0	1.0	1.0
1639	15.00	16.00	1.07	25.6	28.6	31.6	34.6	38.1	41.6	45.6	50.7	55.7	60.7	65.7	70.7	75.7	81.7	87.7	93.7
				0.9	0.9	0.9	0.9	0.9	0.9	0.9	0.9	0.9	0.9	1.0	1.0	1.0	1.0	1.0	1.0
1632	14.00	15.00	1.07	27.2	30.2	33.2	36.2	39.7	43.2	47.2	52.2	57.2	62.2	67.2	72.2	77.2	83.2	89.2	95.2
				0.9	0.9	0.9	0.9	0.9	0.9	0.9	0.9	0.9	0.9	1.0	1.0	1.0	1.0	1.0	1.0
1579	22.40	24.80	1.11	—	—	—	—	25.4	28.9	32.9	37.9	42.9	47.9	52.9	57.9	62.9	68.9	74.9	80.9
				—	—	—	—	0.9	0.9	0.9	0.9	0.9	0.9	1.0	1.0	1.0	1.0	1.0	1.0
1579	22.40	24.80	1.11	—	—	—	—	25.4	28.9	32.9	37.9	42.9	47.9	52.9	57.9	62.9	68.9	74.9	80.9
				—	—	—	—	0.9	0.9	0.9	0.9	0.9	0.9	1.0	1.0	1.0	1.0	1.0	1.0
1573	18.00	20.00	1.11	—	23.1	26.1	29.1	32.6	36.1	40.1	45.1	50.1	55.1	60.1	65.1	70.1	76.1	82.1	88.1
				—	0.9	0.9	0.9	0.9	0.9	0.9	0.9	0.9	0.9	0.9	1.0	1.0	1.0	1.0	1.0
1567	19.00	21.20	1.12	—	—	24.4	27.4	30.9	34.4	38.4	43.4	48.4	53.4	58.4	63.4	68.4	74.4	80.4	86.4
				—	—	0.9	0.9	0.9	0.9	0.9	0.9	0.9	0.9	0.9	1.0	1.0	1.0	1.0	1.0
1564	17.00	19.00	1.12	21.7	24.7	27.7	30.7	34.2	37.7	41.7	46.7	51.7	56.7	61.7	66.7	71.7	77.7	83.7	89.7
				0.9	0.9	0.9	0.9	0.9	0.9	0.9	0.9	0.9	0.9	0.9	1.0	1.0	1.0	1.0	1.0
1561	20.00	22.40	1.12	—	—	—	25.7	29.2	32.7	36.7	41.7	46.7	51.7	56.7	61.7	66.7	72.7	78.7	84.7
				—	—	—	0.9	0.9	0.9	0.9	0.9	0.9	0.9	0.9	1.0	1.0	1.0	1.0	1.0
1560	12.50	14.00	1.12	29.2	32.2	35.2	38.2	41.7	45.2	49.2	54.2	59.2	64.2	69.2	74.2	79.2	85.2	91.2	97.2
				0.9	0.9	0.9	0.9	0.9	0.9	0.9	0.9	0.9	0.9	0.9	1.0	1.0	1.0	1.0	1.0

⚠ **WARNING** ** = Sheave Rim Speed in excess of 6500 feet per minute — see page 236

POWER-WEDGE PRE-ENGINEERED DRIVE SELECTION TABLES

Ratio 1.00-1.12 8V/8VX PRE-ENGINEERED TABLES

V-Belt Number and Center Distance (Other sizes may be available, see page 214)												Sheave Outside Diameters		Rated HP per Belt — 8V & 8VX (includes Added HP for Speed Ratio) Super Power-Wedge & Power-Wedge Cog-Belt RPM of Small Sheave				
8V 2500	8V 2650	8V 2800	8V 3000	8V 3150	8V 3350	8V 3550	8V 3750	8V 4000	8V 4250	8V 4500	8V 5000	Small Sheave	Large Sheave	575 RPM	690 RPM	870 RPM	1160 RPM	1750 RPM
105.4	112.9	120.4	130.4	137.9	147.9	157.9	167.9	180.4	192.9	205.4	230.4	12.50	12.50	25.34	29.32	35.00	42.58	50.91
1.0	1.0	1.0	1.0	1.0	1.0	1.1	1.1	1.1	1.1	1.1	1.1							
104.3	111.8	119.3	129.3	136.8	146.8	156.8	166.8	179.3	191.8	204.3	229.3	13.20	13.20	28.11	32.56	38.88	47.26	56.13
1.0	1.0	1.0	1.0	1.0	1.0	1.1	1.1	1.1	1.1	1.1	1.1							
103.0	110.5	118.0	128.0	135.5	145.5	155.5	165.5	178.0	190.5	203.0	228.0	14.00	14.00	31.26	36.22	43.24	52.48	61.66
1.0	1.0	1.0	1.0	1.0	1.0	1.1	1.1	1.1	1.1	1.1	1.1							
101.4	108.9	116.4	126.4	133.9	143.9	153.9	163.9	176.4	188.9	201.4	226.4	15.00	15.00	35.15	40.72	48.58	58.78	**
1.0	1.0	1.0	1.0	1.0	1.0	1.1	1.1	1.1	1.1	1.1	1.1							
99.9	107.4	114.9	124.9	132.4	142.4	152.4	162.4	174.9	187.4	199.9	224.9	16.00	16.00	39.00	45.16	53.81	64.81	**
1.0	1.0	1.0	1.0	1.0	1.0	1.1	1.1	1.1	1.1	1.1	1.1							
98.3	105.8	113.3	123.3	130.8	140.8	150.8	160.8	173.3	185.8	198.3	223.3	17.00	17.00	42.79	49.53	58.90	70.58	**
1.0	1.0	1.0	1.0	1.0	1.0	1.1	1.1	1.1	1.1	1.1	1.1							
96.7	104.2	111.7	121.7	129.2	139.2	149.2	159.2	171.7	184.2	196.7	221.7	18.00	18.00	46.54	53.82	63.87	76.06	**
1.0	1.0	1.0	1.0	1.0	1.0	1.1	1.1	1.1	1.1	1.1	1.1							
95.2	102.7	110.2	120.2	127.7	137.7	147.7	157.7	170.2	182.7	195.2	220.2	19.00	19.00	50.25	58.04	68.70	81.25	**
1.0	1.0	1.0	1.0	1.0	1.0	1.1	1.1	1.1	1.1	1.1	1.1							
93.6	101.1	108.6	118.6	126.1	136.1	146.1	156.1	168.6	181.1	193.6	218.6	20.00	20.00	53.90	62.19	73.39	86.12	**
1.0	1.0	1.0	1.0	1.0	1.0	1.1	1.1	1.1	1.1	1.1	1.1							
91.7	99.2	106.7	116.7	124.2	134.2	144.2	154.2	166.7	179.2	191.7	216.7	21.20	21.20	58.22	67.05	78.82	91.55	**
1.01.0	1.0	1.0	1.0	1.0	1.1	1.1	1.1	1.1	1.1		1.1							
89.8	97.3	104.8	114.8	122.3	132.3	142.3	152.3	164.8	177.3	189.8	214.8	22.40	22.40	62.46	71.80	84.04	**	**
1.0	1.0	1.0	1.0	1.0	1.0	1.1	1.1	1.1	1.1	1.1	1.1							
89.8	97.3	104.8	114.8	122.3	132.3	142.3	152.3	164.8	177.3	189.8	214.8	22.40	22.40	62.46	71.80	84.04	**	**
1.0	1.0	1.0	1.0	1.0	1.0	1.1	1.1	1.1	1.1	1.1	1.1							
95.9	103.4	110.9	120.9	128.4	138.4	148.4	158.4	170.9	183.4	195.9	219.4	19.00	20.00	50.52	58.37	69.11	91.79	**
1.0	1.0	1.0	1.0	1.0	1.0	1.1	1.1	1.1	1.1	1.1	1.1							
104.8	112.3	119.8	129.8	137.3	147.3	157.3	167.3	179.8	192.3	204.8	220.9	18.00	19.00	47.28	54.71	64.98	77.54	**
1.0	1.0	1.0	1.0	1.0	1.0	1.1	1.1	1.1	1.1	1.1	1.1							
90.8	98.3	105.8	115.8	123.3	133.3	143.3	153.3	165.8	178.3	190.8	229.8	12.50	13.20	26.07	30.21	36.11	44.06	53.15
1.0	1.0	1.0	1.0	1.0	1.0	1.1	1.1	1.1	1.1	1.1	1.1							
97.5	105.0	112.5	122.5	130.0	140.0	150.0	160.0	172.5	185.0	197.5	215.8	21.20	22.40	58.95	67.93	79.93	93.03	**
1.0	1.0	1.0	1.0	1.0	1.0	1.1	1.1	1.1	1.1	1.1	1.1							
92.6	100.1	107.6	117.6	125.1	135.1	145.1	155.1	167.6	180.1	192.6	222.5	17.00	18.00	43.53	50.41	60.02	72.06	**
1.0	1.0	1.0	1.0	1.0	1.0	1.1	1.1	1.1	1.1	1.1	1.1							
103.6	111.1	118.6	128.6	136.1	146.1	156.1	166.1	178.6	191.1	203.6	217.6	20.00	21.20	54.63	63.07	74.50	87.61	**
1.0	1.0	1.0	1.0	1.0	1.0	1.1	1.1	1.1	1.1	1.1	1.1							
99.1	106.6	114.1	124.1	131.6	141.6	151.6	161.6	174.1	186.6	199.1	228.6	13.20	14.00	28.85	33.44	39.99	48.75	58.37
1.0	1.0	1.0	1.0	1.0	1.0	1.1	1.1	1.1	1.1	1.1	1.1							
100.7	108.2	115.7	125.7	133.2	143.2	153.2	163.2	175.7	188.2	200.7	224.1	16.00	17.00	39.73	46.04	54.92	66.30	**
1.0	1.0	1.0	1.0	1.0	1.0	1.1	1.1	1.1	1.1	1.1	1.1							
102.2	109.7	117.2	127.2	134.7	144.7	154.7	164.7	177.2	189.7	202.2	225.7	15.00	16.00	35.89	41.61	49.69	60.26	**
1.0	1.0	1.0	1.0	1.0	1.0	1.1	1.1	1.1	1.1	1.1	1.1							
87.9	95.4	102.9	112.9	120.4	130.4	140.4	150.4	162.9	175.4	187.9	227.2	14.00	15.00	31.99	37.10	44.35	53.96	63.90
1.0	1.0	1.0	1.0	1.0	1.0	1.1	1.1	1.1	1.1	1.1	1.1							
87.9	95.4	102.9	112.9	120.4	130.4	140.4	150.4	162.9	175.4	187.9	212.9	22.40	24.80	63.19	72.68	85.15	**	**
1.0	1.0	1.0	1.0	1.0	1.0	1.1	1.1	1.1	1.1	1.1	1.1							
95.1	102.7	110.2	120.2	127.7	137.7	147.7	157.7	170.2	182.7	195.2	212.9	22.40	24.80	63.19	72.68	85.15	**	**
1.0	1.0	1.0	1.0	1.0	1.0	1.1	1.1	1.1	1.1	1.1	1.1							
93.4	100.9	108.4	118.4	125.9	135.9	145.9	155.9	168.4	180.9	193.4	220.2	18.00	20.00	47.28	54.71	64.98	77.54	**
87.9	95.4	102.9	112.9	120.4	130.4	140.4	150.4	162.9	175.4	187.9	1.1							
1.0	1.0	1.0	1.0	1.0	1.0	1.1	1.1	1.1	1.1	1.1	218.4	19.00	21.20	51.53	59.58	70.64	83.83	**
96.7	104.2	111.7	121.7	129.2	139.2	149.2	159.2	171.7	184.2	196.7	1.1							
87.9	95.4	102.9	112.9	120.4	130.4	140.4	150.4	162.9	175.4	187.9	221.7	17.00	19.00	44.08	51.07	60.84	73.16	**
1.0	1.0	1.0	1.0	1.0	1.0	1.1	1.1	1.1	1.1	1.1	1.1							
91.7	99.2	106.7	116.7	124.2	134.2	144.2	154.2	166.7	179.2	191.7	216.7	20.00	22.40	55.18	63.72	75.33	88.71	**
1.0	1.0	1.0	1.0	1.0	1.0	1.1	1.1	1.1	1.1	1.1	1.1							
104.2	111.7	119.2	129.2	136.7	146.7	156.7	166.7	179.2	191.7	204.2	229.2	12.50	14.00	26.62	30.86	36.94	45.16	54.81
1.0	1.0	1.0	1.0	1.0	1.0	1.1	1.1	1.1	1.1	1.1	1.1							

⚠**WARNING** ** = Sheave Rim Speed in excess of 6500 feet per minute — see page 236

POWER-WEDGE PRE-ENGINEERED DRIVE SELECTION TABLES

8V/8VX PRE-ENGINEERED TABLES Ratio 1.14-1.37

Driven Speed for Motor Speed of	Sheave Outside Diameters			V-Belt Number and Center Distance (Other sizes may be available, see page 214)															
1750 RPM	Small Sheave	Large Sheave	Speed Ratio	8VX 1000	8VX 1060	8VX 1120	8VX 1180	8VX 1250	8VX 1320	8VX 1400	8VX 1500	8VX 1600	8VX 1700	8VX 1900	8VX 1800	8VX 2000	8V 2120	8V 2240	8V 2360
1542	15.00	17.00	1.14	24.8	27.8	30.9	33.9	37.4	40.9	44.9	49.9	54.9	59.9	64.9	69.9	74.9	80.9	86.9	92.9
				0.9	0.9	0.9	0.9	0.9	0.9	0.9	0.9	0.9	0.9	0.9	1.0	1.0	1.0	1.0	1.0
1537	13.20	15.00	1.14	27.8	30.8	33.8	36.8	40.3	43.8	47.8	52.8	57.8	62.8	67.8	72.8	77.8	83.8	89.8	95.8
				0.9	0.9	0.9	0.9	0.9	0.9	0.9	0.9	0.9	0.9	0.9	1.0	1.0	1.0	1.0	1.0
1528	14.00	16.00	1.14	26.4	29.4	32.4	35.4	38.9	42.4	46.4	51.4	56.4	61.4	66.4	71.4	76.4	82.4	88.4	94.4
				0.9	0.9	0.9	0.9	0.9	0.9	0.9	0.9	0.9	0.9	0.9	1.0	1.0	1.0	1.0	1.0
1494	21.20	24.80	1.17	—	—	—	—	26.3	29.8	33.8	38.8	43.8	48.8	53.8	58.8	63.8	69.8	75.9	81.9
				—	—	—	—	0.9	0.9	0.9	0.9	0.9	0.9	0.9	1.0	1.0	1.0	1.0	1.0
1485	17.00	20.00	1.18	20.9	23.9	26.9	29.9	33.4	36.9	40.9	45.9	50.9	55.9	60.9	65.9	70.9	76.9	82.9	88.9
				0.8	0.9	0.9	0.9	0.9	0.9	0.9	0.9	0.9	0.9	0.9	1.0	1.0	1.0	1.0	1.0
1483	18.00	21.20	1.18	—	22.2	25.2	28.2	31.7	35.2	39.2	44.2	49.2	54.2	59.2	64.2	69.2	75.2	81.2	87.2
				—	0.9	0.9	0.9	0.9	0.9	0.9	0.9	0.9	0.9	0.9	1.0	1.0	1.0	1.0	1.0
1482	19.00	22.40	1.18	—	—	23.4	26.4	29.9	33.4	37.4	42.5	47.5	52.5	57.5	62.5	67.5	73.5	79.5	85.5
				—	—	0.9	0.9	0.9	0.9	0.9	0.9	0.9	0.9	0.9	1.0	1.0	1.0	1.0	1.0
1471	16.00	19.00	1.19	22.5	25.5	28.5	31.5	35.0	38.5	42.5	47.5	52.5	57.5	62.5	67.5	72.5	78.5	84.5	90.5
				0.9	0.9	0.9	0.9	0.9	0.9	0.9	0.9	0.9	0.9	0.9	1.0	1.0	1.0	1.0	1.0
1455	15.00	18.00	1.20	24.0	27.0	30.0	33.0	36.6	40.1	44.1	49.1	54.1	59.1	64.1	69.1	74.1	80.1	86.1	92.1
				0.9	0.9	0.9	0.9	0.9	0.9	0.9	0.9	0.9	0.9	0.9	1.0	1.0	1.0	1.0	1.0
1454	12.50	15.00	1.20	28.4	31.4	34.4	37.4	40.9	44.4	48.4	53.4	58.4	63.4	68.4	73.4	78.4	84.4	90.4	96.4
				0.9	0.9	0.9	0.9	0.9	0.9	0.9	0.9	0.9	0.9	0.9	1.0	1.0	1.0	1.0	1.0
1440	13.20	16.00	1.22	27.0	30.2	33.0	36.0	39.5	43.0	47.0	52.0	57.0	62.1	67.1	72.1	77.1	83.1	89.1	95.1
				0.9	0.9	0.9	0.9	0.9	0.9	0.9	0.9	0.9	0.9	0.9	1.0	1.0	1.0	1.0	1.0
1438	14.00	17.00	1.22	25.6	28.6	31.6	34.6	38.1	41.6	45.6	50.6	55.6	60.6	65.6	70.6	75.6	81.6	87.6	93.6
				0.9	0.9	0.9	0.9	0.9	0.9	0.9	0.9	0.9	0.9	0.9	1.0	1.0	1.0	1.0	1.0
1409	20.00	24.80	1.24	—	—	—	—	27.2	30.7	34.7	39.7	44.7	49.8	54.8	59.8	64.8	70.8	76.8	82.8
				—	—	—	—	0.9	0.9	0.9	0.9	0.9	0.9	0.9	0.9	1.0	1.0	1.0	1.0
1403	18.00	22.40	1.25	—	—	24.2	27.2	30.7	34.2	38.2	43.2	48.2	53.2	58.2	63.2	68.2	74.2	80.2	86.2
				—	—	0.9	0.9	0.9	0.9	0.9	0.9	0.9	0.9	0.9	1.0	1.0	1.0	1.0	1.0
1400	17.00	21.20	1.25	—	22.9	25.9	28.9	32.4	35.9	39.9	44.9	50.0	55.0	60.0	65.0	70.0	76.0	82.0	88.0
				—	0.9	0.9	0.9	0.9	0.9	0.9	0.9	0.9	0.9	0.9	1.0	1.0	1.0	1.0	1.0
1396	16.00	20.00	1.25	21.6	24.6	27.7	30.7	34.2	37.7	41.7	46.7	51.7	56.7	61.7	66.7	71.7	77.7	83.7	89.7
				0.8	0.9	0.9	0.9	0.9	0.9	0.9	0.9	0.9	0.9	0.9	1.0	1.0	1.0	1.0	1.0
1378	15.00	19.00	1.27	23.2	26.2	29.2	32.2	35.7	39.2	43.3	48.3	53.3	58.3	63.3	68.3	73.3	79.3	85.3	91.3
				0.8	0.9	0.9	0.9	0.9	0.9	0.9	0.9	0.9	0.9	0.9	1.0	1.0	1.0	1.0	1.0
1362	12.50	16.00	1.28	27.6	30.6	33.6	36.6	40.1	43.6	47.6	52.6	57.6	62.6	67.6	72.6	77.6	83.6	89.6	95.6
				0.9	0.9	0.9	0.9	0.9	0.9	0.9	0.9	0.9	0.9	0.9	1.0	1.0	1.0	1.0	1.0
1357	14.00	18.00	1.29	24.8	27.8	30.8	33.8	37.3	40.8	44.8	49.8	54.8	59.8	64.8	69.8	74.8	80.8	86.8	92.8
				0.8	0.9	0.9	0.9	0.9	0.9	0.9	0.9	0.9	0.9	0.9	1.0	1.0	1.0	1.0	1.0
1354	13.20	17.00	1.29	26.2	29.2	32.2	35.2	38.7	42.2	46.2	51.2	56.2	61.3	66.3	71.3	76.3	82.3	88.3	94.3
				0.8	0.9	0.9	0.9	0.9	0.9	0.9	0.9	0.9	0.9	0.9	1.0	1.0	1.0	1.0	1.0
1337	19.00	24.80	1.31	—	—	—	24.4	27.9	31.5	35.5	40.5	45.5	50.5	55.5	60.5	65.5	71.5	77.5	83.5
				—	—	—	0.9	0.9	0.9	0.9	0.9	0.9	0.9	0.9	0.9	1.0	1.0	1.0	10.
1324	17.00	22.40	1.32	—	21.9	24.9	27.9	31.4	35.0	39.0	44.0	49.0	54.0	59.0	64.0	69.0	75.0	81.0	87.0
				—	0.8	0.9	0.9	0.9	0.9	0.9	0.9	0.9	0.9	0.9	0.9	1.0	1.0	1.0	1.0
1317	16.00	21.20	1.33	20.6	23.6	26.7	29.7	33.2	36.7	40.7	45.7	50.7	55.7	60.7	65.7	70.7	76.7	82.7	88.7
				0.8	0.8	0.9	0.9	0.9	0.9	0.9	0.9	0.9	0.9	0.9	1.0	1.0	1.0	1.0	1.0
1308	15.00	20.00	1.34	22.4	25.4	28.4	31.4	34.9	38.4	42.4	47.4	52.5	57.5	62.5	67.5	72.5	78.5	84.5	90.5
				0.8	0.9	0.9	0.9	0.9	0.9	0.9	0.9	0.9	0.9	0.9	1.0	1.0	1.0	1.0	1.0
1304	22.40	30.00	1.34	—	—	—	—	—	—	28.6	33.6	38.7	43.7	48.7	53.7	58.7	64.7	70.7	76.8
				—	—	—	—	—	—	0.9	0.9	0.9	0.9	0.9	0.9	1.0	1.0	1.0	1.0
1304	22.40	30.00	1.34	—	—	—	—	—	—	28.6	33.6	38.7	43.7	48.7	53.7	58.7	64.7	70.7	76.8
				—	—	—	—	—	—	0.9	0.9	0.9	0.9	0.9	0.9	1.0	1.0	1.0	1.0
1285	14.00	19.00	1.36	24.0	27.0	30.0	33.0	36.5	40.0	44.0	49.0	54.0	59.0	64.0	69.0	74.0	80.0	86.0	92.0
				0.8	0.9	0.9	0.9	0.9	0.9	0.9	0.9	0.9	0.9	0.9	1.0	1.0	1.0	1.0	1.0
1281	12.50	17.00	1.37	26.7	29.7	32.8	35.8	39.3	42.8	46.8	51.8	56.8	61.8	66.8	71.8	76.8	82.8	88.8	94.8
				0.8	0.9	0.9	0.9	0.9	0.9	0.9	0.9	0.9	0.9	0.9	1.0	1.0	1.0	1.0	1.0
1278	13.20	18.00	1.37	25.4	28.4	31.4	34.4	37.9	41.4	45.4	50.4	55.4	60.4	65.5	70.5	75.5	81.5	87.5	93.5
				0.8	0.9	0.9	0.9	0.9	0.90	0.9	0.9	0.9	0.9	0.9	1.0	1.0	1.0	1.0	1.0

⚠**WARNING** ** = Sheave Rim Speed in excess of 6500 feet per minute — see page 236

POWER-WEDGE PRE-ENGINEERED DRIVE SELECTION TABLES

Ratio 1.14-1.37 8V/8VX PRE-ENGINEERED TABLES

V-Belt Number and Center Distance (Other sizes may be available, see page 214)												Sheave Outside Diameters		Rated HP per Belt — 8V & 8VX (includes Added HP for Speed Ratio) Super Power-Wedge & Power-Wedge Cog-Belt RPM of Small Sheave				
8V 2500	8V 2650	8V 2800	8V 3000	8V 3150	8V 3350	8V 3550	8V 3750	8V 4000	8V 4250	8V 4500	8V 5000	Small Sheave	Large Sheave	575 RPM	690 RPM	870 RPM	1160 RPM	1750 RPM
99.9	107.4	114.9	124.9	132.4	142.4	152.4	162.4	174.9	187.4	199.9	224.9	15.00	17.00	36.43	42.26	50.52	61.36	**
1.0	1.0	1.0	1.0	1.0	1.0	1.0	1.1	1.1	1.1	1.1	1.1							
102.8	110.3	117.8	127.8	135.3	145.3	155.3	165.3	177.8	190.3	202.8	227.8	13.20	15.00	29.39	34.10	40.81	49.85	60.03
1.0	1.0	1.0	1.0	1.0	1.0	1.0	1.1	1.1	1.1	1.1	1.1							
101.4	108.9	116.4	126.4	133.9	143.9	153.9	163.9	176.4	188.9	201.4	226.4	14.00	16.00	32.54	37.75	45.18	55.06	65.56
1.0	1.0	1.0	1.0	1.0	1.0	1.0	1.1	1.1	1.1	1.1	1.1							
88.9	96.4	103.9	113.9	121.4	131.4	141.4	151.4	163.9	176.4	188.9	213.9	21.20	24.80	59.50	68.59	80.76	94.13	**
1.0	1.0	1.0	1.0	1.0	1.0	1.0	1.1	1.1	1.1	1.1	1.1							
95.9	103.4	110.9	120.9	128.4	138.4	148.4	158.4	170.9	183.4	195.9	220.9	17.00	20.00	44.08	51.07	60.84	73.16	**
1.0	1.0	1.0	1.0	1.0	1.0	1.0	1.1	1.1	1.1	1.1	1.1							
94.2	101.7	109.2	119.2	126.7	136.7	146.7	156.7	169.2	181.7	194.2	219.2	18.00	21.20	47.83	55.36	65.81	78.65	**
1.0	1.0	1.0	1.0	1.0	1.0	1.0	1.1	1.1	1.1	1.1	1.1							
92.5	100.0	107.5	117.5	125.0	135.0	145.0	155.0	167.5	180.0	192.5	217.5	19.00	22.40	51.53	59.58	70.64	83.83	**
1.0	1.0	1.0	1.0	1.0	1.0	1.0	1.1	1.1	1.1	1.1	1.1							
97.5	105.0	112.5	122.5	130.0	140.0	150.0	160.0	172.5	185.0	197.5	222.5	16.00	19.00	40.74	47.25	56.44	68.33	**
1.0	1.0	1.0	1.0	1.0	1.0	1.0	1.1	1.1	1.1	1.1	1.1							
99.1	106.6	114.1	124.1	131.6	141.6	151.6	161.6	174.1	186.6	199.1	224.1	15.00	18.00	36.89	42.82	51.22	62.29	**
1.0	1.0	1.0	1.0	1.0	1.0	1.0	1.1	1.1	1.1	1.1	1.1							
103.4	110.9	118.4	128.4	135.9	145.9	155.9	165.9	178.4	190.9	203.4	228.4	12.50	15.00	27.08	31.42	37.64	46.09	56.22
1.0	1.0	1.0	1.0	1.0	1.0	1.0	1.1	1.1	1.1	1.1	1.1							
102.1	109.6	117.1	127.1	134.6	144.6	154.6	164.6	177.1	189.6	202.1	227.1	13.20	16.00	29.86	34.65	41.51	50.78	61.44
1.0	1.0	1.0	1.0	1.0	1.0	1.0	1.1	1.1	1.1	1.1	1.1							
100.6	108.1	115.6	125.6	133.1	143.1	153.1	163.1	175.6	188.1	200.6	225.6	14.00	17.00	33.00	38.31	45.88	56.00	66.97
1.0	1.0	1.0	1.0	1.0	1.0	1.0	1.1	1.1	1.1	1.1	1.1							
89.8	97.3	104.8	114.8	122.3	132.3	142.3	152.3	164.8	177.3	189.8	214.8	20.00	24.80	55.64	64.28	76.03	89.64	**
1.0	1.0	1.0	1.0	1.0	1.0	1.0	1.1	1.1	1.1	1.1	1.1							
93.2	100.7	108.2	118.2	125.8	135.8	145.8	155.8	168.3	180.8	193.3	218.3	18.00	22.40	48.29	55.92	66.51	79.58	**
1.0	1.0	1.0	1.0	1.0	1.0	1.0	1.1	1.1	1.1	1.1	1.1							
95.0	102.5	110.0	120.0	127.5	137.5	147.5	157.5	170.0	182.5	195.0	220.0	17.00	21.20	44.54	51.62	61.54	74.10	**
1.0	1.0	1.0	1.0	1.0	1.0	1.0	1.1	1.1	1.1	1.1	1.1							
96.7	104.2	111.7	121.7	129.2	139.2	149.2	159.2	171.7	184.2	196.7	221.7	16.00	20.00	40.74	47.25	56.44	68.33	**
1.0	1.0	1.0	1.0	1.0	1.0	1.0	1.1	1.1	1.1	1.1	1.1							
98.3	105.8	113.3	123.3	130.8	140.8	150.8	160.8	173.3	185.8	198.3	223.3	15.00	19.00	37.26	43.26	51.78	63.04	**
1.0	1.0	1.0	1.0	1.0	1.0	1.0	1.1	1.1	1.1	1.1	1.1							
102.6	110.1	117.6	127.6	135.1	145.1	155.1	165.1	177.6	190.1	202.6	227.6	12.50	16.00	27.45	31.86	38.20	46.84	57.34
1.0	1.0	1.0	1.0	1.0	1.0	1.0	1.1	1.1	1.1	1.1	1.1							
99.8	107.3	114.8	124.9	132.4	142.4	152.4	162.4	174.9	187.4	199.9	224.9	14.00	18.00	33.37	38.75	46.43	56.74	68.09
1.0	1.0	1.0	1.0	1.0	1.0	1.0	1.1	1.1	1.1	1.1	1.1							
101.3	108.8	116.3	126.3	133.8	143.8	153.8	163.8	176.3	188.8	201.3	226.3	13.20	17.00	30.23	35.09	42.07	51.53	62.56
1.0	1.0	1.0	1.0	1.0	1.0	1.0	1.1	1.1	1.1	1.1	1.1							
90.6	98.1	105.6	115.6	123.1	133.1	143.1	153.1	165.6	178.1	190.6	215.6	19.00	24.80	52.36	60.58	71.90	85.51	**
1.0	1.0	1.0	1.0	1.0	1.0	1.0	1.1	1.1	1.1	1.1	1.1							
94.0	101.5	109.0	119.0	126.5	136.5	146.5	156.5	169.0	181.5	194.0	219.0	17.00	22.40	44.91	52.07	62.10	74.84	**
1.0	1.0	1.0	1.0	1.0	1.0	1.0	1.1	1.1	1.1	1.1	1.1							
95.7	103.3	110.8	120.8	128.3	138.3	148.3	158.3	170.8	183.3	195.8	220.8	16.00	21.20	41.11	47.70	57.00	69.08	**
1.0	1.0	1.0	1.0	1.0	1.0	1.0	1.1	1.1	1.1	1.1	1.1							
97.5	105.0	112.5	122.5	130.0	140.0	150.0	160.	172.5	185.0	197.5	222.5	15.00	20.00	37.26	43.26	51.78	63.04	**
1.0	1.0	1.0	1.0	1.0	1.0	1.0	1.1	1.1	1.1	1.1	1.1							
83.8	91.3	98.8	108.8	116.3	126.3	136.3	146.3	158.8	171.3	183.8	208.8	22.40	30.00	64.57	74.33	87.23	**	**
1.0	1.0	1.0	1.0	1.0	1.0	1.0	1.1	1.1	1.1	1.1	1.1							
83.8	91.3	98.8	108.8	116.3	126.3	136.3	146.3	158.8	171.3	183.8	208.8	22.40	30.00	64.57	74.33	87.23	**	**
1.0	1.0	1.0	1.0	1.0	1.0	1.0	1.1	1.1	1.1	1.1	1.1							
99.1	106.6	114.1	124.1	131.6	141.6	151.6	161.6	174.1	186.6	199.1	224.1	14.00	19.00	33.37	38.75	46.43	56.74	68.09
1.0	1.0	1.0	1.0	1.0	1.0	1.0	1.1	1.1	1.1	1.1	1.1							
101.8	109.3	116.8	126.8	134.3	144.3	154.3	164.3	176.8	189.3	201.8	226.8	12.50	17.00	27.45	31.86	38.20	46.84	57.34
1.0	1.0	1.0	1.0	1.0	1.0	1.0	1.1	1.1	1.1	1.1	1.1							
100.5	108.0	115.5	125.5	133.0	143.0	153.0	163.0	175.5	188.0	200.5	225.5	13.20	18.00	30.23	35.09	42.07	51.53	62.56
1.0	1.0	1.0	1.0	1.0	1.0	1.0	1.1	1.1	1.1	1.1	1.1							

⚠**WARNING** ** = Sheave Rim Speed in excess of 6500 feet per minute — see page 236

POWER-WEDGE PRE-ENGINEERED DRIVE SELECTION TABLES

8V/8VX PRE-ENGINEERED TABLES Ratio 1.38-1.78

Driven Speed for Motor Speed of	Sheave Outside Diameters			V-Belt Number and Center Distance (Other sizes may be available, see page 214)															
1750 RPM	Small Sheave	Large Sheave	Speed Ratio	8VX 1000	8VX 1060	8VX 1120	8VX 1180	8VX 1250	8VX 1320	8VX 1400	8VX 1500	8VX 1600	8VX 1700	8VX 1900	8VX 1800	8VX 2000	8V 2120	8V 2240	8V 2360
1266	18.00	24.80	1.38	—	—	—	25.2	28.7	32.2	36.2	41.2	46.3	51.3	56.3	61.3	66.3	72.3	78.3	84.3
				—	—	—	0.9	0.9	0.9	0.9	0.9	0.9	0.9	0.9	0.9	1.0	1.0	1.0	1.0
1245	16.00	22.40	1.41	—	22.6	25.6	28.7	32.2	35.7	39.7	44.7	49.7	54.7	59.8	64.8	69.8	75.8	81.8	87.8
				—	0.8	0.9	0.9	0.9	0.9	0.9	0.9	0.9	0.9	0.9	0.9	1.0	1.0	1.0	1.0
1233	15.00	21.20	1.42	21.3	24.4	27.4	30.4	33.9	37.4	41.5	46.5	51.5	56.5	61.5	66.5	71.5	77.5	83.5	89.5
				0.8	0.8	0.9	0.9	0.9	0.9	0.9	0.9	0.9	0.9	0.9	0.9	1.0	1.0	1.0	1.0
1233	21.20	30.00	1.42	—	—	—	—	—	—	29.5	34.5	39.5	44.6	49.6	54.6	59.6	65.6	71.7	77.7
				—	—	—	—	—	—	0.9	0.9	0.9	0.9	0.9	0.9	0.9	1.0	1.0	1.0
1220	14.00	20.00	1.43	23.1	26.1	29.1	32.2	35.7	39.2	43.2	48.2	53.2	58.2	63.2	68.2	73.2	79.2	85.2	91.2
				0.8	0.8	0.9	0.9	0.9	0.9	0.9	0.9	0.9	0.9	0.9	0.9	1.0	1.0	1.0	1.0
1210	13.20	19.00	1.45	24.5	27.6	30.6	33.6	37.1	40.6	44.6	49.6	54.6	59.6	64.6	69.6	74.7	80.7	86.7	92.7
				0.8	0.8	0.9	0.9	0.9	0.9	0.9	0.9	0.9	0.9	0.9	0.9	1.0	1.0	1.0	1.0
1209	12.50	18.00	1.45	25.9	28.9	31.9	34.9	38.4	42.0	46.0	51.0	56.0	61.0	66.0	71.0	76.0	82.0	88.0	84.0
				0.8	0.9	0.9	0.9	0.9	0.9	0.9	0.9	0.9	0.9	0.9	1.0	1.0	1.0	1.0	1.0
1195	17.00	24.80	1.46	—	—	22.8	25.9	29.4	32.9	37.0	42.0	47.0	52.0	57.0	62.0	67.1	73.1	79.1	85.1
				—	—	0.8	0.9	0.9	0.9	0.9	0.9	0.9	0.9	0.9	0.9	1.0	1.0	1.0	1.0
1167	15.00	22.40	1.50	20.3	23.3	26.4	29.4	32.9	36.4	40.5	45.5	50.5	55.5	60.5	65.5	70.5	76.5	82.5	88.5
				0.8	0.8	0.8	0.9	0.9	0.9	0.9	0.9	0.9	0.9	0.9	0.9	1.0	1.0	1.0	1.0
1163	20.00	30.00	1.51	—	—	—	—	—	—	30.3	35.4	40.4	45.5	50.5	55.5	60.5	66.5	72.6	78.6
				—	—	—	—	—	—	0.9	0.9	0.9	0.9	0.9	0.9	0.9	1.0	1.0	1.0
1150	14.00	21.20	1.52	22.1	25.1	28.1	31.1	34.7	38.2	42.2	47.2	52.2	57.2	62.2	67.3	72.3	78.3	84.3	90.3
				0.8	0.8	0.9	0.9	0.9	0.9	0.9	0.9	0.9	0.9	0.9	0.9	1.0	1.0	1.0	1.0
1149	13.20	20.00	1.52	23.7	26.7	29.7	32.7	36.3	39.8	43.8	48.8	53.8	58.8	63.8	68.8	73.8	79.9	85.9	91.9
				0.8	0.8	0.9	0.9	0.9	0.9	0.9	0.9	0.9	0.9	0.9	0.9	1.0	1.0	1.0	1.0
1145	12.50	19.00	1.53	25.0	28.1	31.1	34.1	37.6	41.1	45.1	50.2	55.2	60.2	65.2	70.2	75.2	81.2	87.2	93.2
				0.8	0.8	0.9	0.9	0.9	0.9	0.9	0.9	0.9	0.9	0.9	0.9	1.0	1.0	1.0	1.0
1124	16.00	24.80	1.56	—	—	23.5	26.6	30.1	33.7	37.7	42.7	47.8	52.8	57.8	62.8	67.8	73.8	79.8	85.8
				—	—	0.8	0.8	0.9	0.9	0.9	0.9	0.9	0.9	0.9	0.9	1.0	1.0	1.0	1.0
1104	19.00	30.00	1.59	—	—	—	—	—	27.0	31.0	36.1	41.1	46.2	51.2	56.2	61.3	67.3	73.3	79.3
				—	—	—	—	—	0.9	0.9	0.9	0.9	0.9	0.9	0.9	1.0	1.0	1.0	1.0
1101	22.40	35.50	1.59	—	—	—	—	—	—	—	—	33.9	39.0	44.0	49.1	54.1	60.2	66.2	72.2
				—	—	—	—	—	—	—	—	0.9	0.9	0.9	0.9	0.9	0.9	1.0	1.0
1101	22.40	35.50	1.59	—	—	—	—	—	—	—	—	33.9	39.0	44.0	49.1	54.1	60.2	66.2	72.2
				—	—	—	—	—	—	—	—	0.9	0.9	0.9	0.9	0.9	0.9	1.0	1.0
1088	14.00	22.40	1.61	21.0	24.0	27.1	30.1	33.6	37.2	41.2	46.2	51.2	56.3	61.3	66.3	71.3	77.3	83.3	89.3
				0.8	0.8	0.8	0.9	0.9	0.9	0.9	0.9	0.9	0.9	0.9	0.9	1.0	1.0	1.0	1.0
1087	12.50	20.00	1.61	24.2	27.2	30.2	33.3	36.8	40.3	44.3	49.3	54.3	59.4	64.4	69.4	74.4	80.4	86.4	92.4
				0.8	0.8	0.9	0.9	0.9	0.9	0.9	0.9	0.9	0.9	0.9	0.9	1.0	1.0	1.0	1.0
1093	13.20	21.20	1.62	22.6	25.7	28.7	31.7	35.3	38.8	42.8	47.8	52.8	57.8	62.9	67.9	72.9	78.9	84.9	90.9
				0.8	0.8	0.8	0.9	0.9	0.9	0.9	0.9	0.9	0.9	0.9	0.9	1.0	1.0	1.0	1.0
1053	15.00	24.80	1.66	—	—	24.2	27.3	30.9	34.4	38.4	43.5	48.5	53.5	58.5	63.6	68.6	74.6	80.6	86.6
				—	—	0.8	0.8	0.9	0.9	0.9	0.9	0.9	0.9	0.9	0.9	0.9	1.0	1.0	1.0
1045	18.00	30.00	1.67	—	—	—	—	—	27.6	31.7	36.8	4109	46.9	52.0	57.0	62.0	68.0	74.1	80.1
				—	—	—	—	—	0.8	0.9	0.9	0.9	0.9	0.9	0.9	0.9	1.0	1.0	1.0
1041	21.20	35.50	1.68	—	—	—	—	—	—	—	—	34.7	39.8	44.9	50.0	55.0	61.0	67.0	73.0
				—	—	—	—	—	—	—	—	0.9	0.9	0.9	0.9	0.9	0.9	1.0	1.0
1025	12.50	21.20	1.71	23.1	26.2	29.2	32.2	35.8	39.3	43.3	48.3	53.4	58.4	63.4	68.4	73.4	79.4	85.4	91.4
				0.8	0.8	0.8	0.9	0.9	0.9	0.9	0.9	0.9	0.9	0.9	0.9	1.0	1.0	1.0	1.0
1025	13.20	22.40	1.71	21.5	24.6	27.7	30.7	34.2	37.8	41.8	46.8	51.8	56.9	61.9	66.9	71.9	77.9	83.9	89.9
				0.8	0.8	0.8	0.9	0.9	0.9	0.9	0.9	0.9	0.9	0.9	0.9	1.0	1.0	1.0	1.0
987	17.00	30.00	1.77	—	—	—	—	—	28.3	32.4	37.5	42.6	47.6	52.7	57.7	62.7	68.8	74.8	80.8
				—	—	—	—	—	0.8	0.9	0.9	0.9	0.9	0.9	0.9	0.9	1.0	1.0	1.0
982	14.00	24.80	1.78	—	21.9	24.9	28.0	31.6	35.1	39.2	44.2	49.2	54.3	59.3	64.3	69.3	75.3	81.3	87.4
				—	0.8	0.8	0.8	0.9	0.9	0.9	0.9	0.9	0.9	0.9	0.9	0.9	1.0	1.0	1.0
982	20.00	35.50	1.78	—	—	—	—	—	—	—	30.4	35.6	40.7	45.8	50.8	55.9	61.9	68.0	74.0
				—	—	—	—	—	—	—	0.9	0.9	0.9	0.9	0.9	0.9	0.9	1.0	1.0

⚠**WARNING** ** = Sheave Rim Speed in excess of 6500 feet per minute — see page 236

POWER-WEDGE PRE-ENGINEERED DRIVE SELECTION TABLES

Ratio 1.38-1.78 8V/8VX PRE-ENGINEERED TABLES

V-Belt Number and Center Distance (Other sizes may be available, see page 214)												Sheave Outside Diameters		Rated HP per Belt — 8V & 8VX (includes Added HP for Speed Ratio) Super Power-Wedge & Power-Wedge Cog-Belt RPM of Small Sheave				
8V 2500	8V 2650	8V 2800	8V 3000	8V 3150	8V 3350	8V 3550	8V 3750	8V 4000	8V 4250	8V 4500	8V 5000	Small Sheave	Large Sheave	575 RPM	690 RPM	870 RPM	1160 RPM	1750 RPM
91.3	98.8	106.3	116.3	123.8	133.8	143.8	153.8	166.4	178.9	191.4	216.4	18.00	24.80	48.66	56.36	67.07	80.3	**
1.0	1.0	1.0	1.0	1.0	1.0	1.0	1.1	1.1	1.1	1.1	1.1							
94.8	102.3	109.8	119.8	127.3	137.3	147.3	157.3	169.8	182.3	194.8	219.8	16.00	22.40	41.47	48.13	57.55	69.81	**
1.0	1.0	1.0	1.0	1.0	1.0	1.0	1.1	1.1	1.1	1.1	1.1							
96.5	104.0	111.5	121.5	129.0	139.0	149.0	159.0	171.5	184.0	196.5	221.5	15.00	21.20	37.63	43.69	52.33	63.77	**
1.0	1.0	1.0	1.0	1.0	1.0	1.0	1.1	1.1	1.1	1.1	1.1							
84.7	92.2	99.7	109.7	117.2	127.2	137.2	147.2	159.7	172.2	184.7	209.7	21.20	30.00	60.69	70.02	82.57	96.54	**
1.0	1.0	1.0	1.0	1.0	1.0	1.0	1.1	1.1	1.1	1.1	1.1							
93.8	105.8	113.3	123.3	130.8	140.8	150.8	160.8	173.3	185.8	198.3	223.3	14.00	20.00	33.73	39.18	46.98	57.47	69.19
1.0	1.0	1.0	1.0	1.0	1.0	1.0	1.1	1.1	1.1	1.1	1.1							
99.7	107.2	114.7	124.7	132.2	142.2	152.2	162.2	174.7	187.2	199.7	224.7	13.20	19.00	30.59	35.53	42.62	52.26	63.66
1.0	1.0	1.0	1.0	1.0	1.0	1.0	1.1	1.1	1.1	1.1	1.1							
101.0	108.5	116.0	126.0	133.5	143.5	153.5	163.5	176.0	188.5	201.0	226.0	12.50	18.00	27.81	32.29	38.74	47.57	58.44
1.0	1.0	1.0	1.0	1.0	1.0	1.0	1.1	1.1	1.1	1.1	1.1							
92.1	99.6	107.1	117.1	124.6	134.6	144.6	154.6	167.1	179.6	192.1	217.1	17.00	24.80	45.27	52.50	62.65	75.57	**
1.0	1.0	1.0	1.0	1.0	1.0	1.0	1.1	1.1	1.1	1.1	1.1							
95.6	103.1	110.6	120.6	128.1	138.1	148.1	158.1	170.6	183.1	195.6	220.6	15.00	22.40	37.63	43.69	52.33	63.77	**
1.0	1.0	1.0	1.0	1.0	1.0	1.0	1.1	1.1	1.1	1.1	1.1							
85.6	93.1	100.6	110.6	118.1	128.1	138.1	148.1	160.7	173.2	185.7	210.7	20.00	30.00	56.37	65.16	77.13	91.12	**
1.0	1.0	1.0	1.0	1.0	1.0	1.0	1.0	1.1	1.1	1.1	1.1							
97.3	104.8	112.3	122.3	129.8	139.8	149.8	159.8	172.3	184.8	197.3	222.3	14.00	21.20	33.73	39.18	46.98	57.47	69.19
1.0	1.0	1.0	1.0	1.0	1.0	1.0	1.1	1.1	1.1	1.1	1.1							
98.9	106.4	113.9	123.9	131.4	141.4	151.4	161.4	173.9	186.4	198.9	223.9	13.20	20.00	30.59	35.53	42.62	52.26	63.66
1.0	1.0	1.0	1.0	1.0	1.0	1.0	1.1	1.1	1.1	1.1	1.1							
100.2	107.7	115.2	125.2	132.7	142.7	152.7	162.7	175.2	187.7	200.2	225.2	12.50	19.00	27.81	32.29	38.74	47.57	58.44
1.0	1.0	1.0	1.0	1.0	1.0	1.0	1.1	1.1	1.1	1.1	1.1							
92.9	100.4	107.9	117.9	125.4	135.4	145.4	155.4	167.9	180.4	192.9	217.9	16.00	24.80	41.47	48.13	57.55	69.81	**
1.0	1.0	1.0	1.0	1.0	1.0	1.0	1.1	1.1	1.1	1.1	1.1							
86.3	93.9	101.4	111.4	118.9	128.9	138.9	148.9	161.4	173.9	186.4	211.4	19.00	30.00	53.03	61.39	72.91	86.87	**
1.0	1.0	1.0	1.0	1.0	1.0	1.0	1.0	1.1	1.1	1.1	1.1							
79.3	86.8	94.3	104.3	111.8	121.8	131.9	141.9	154.4	166.9	179.4	204.4	22.40	35.50	65.24	75.14	88.25	**	**
1.0	1.0	1.0	1.0	1.0	1.0	1.0	1.0	1.1	1.1	1.1	1.1							
79.3	86.8	94.3	104.3	111.8	121.8	131.9	141.9	154.4	166.9	179.4	204.4	22.40	35.50	65.24	75.14	88.25	**	**
1.0	1.0	1.0	1.0	1.0	1.0	1.0	1.0	1.1	1.1	1.1	1.1							
96.3	103.8	111.3	121.3	128.8	138.8	148.9	158.9	171.4	183.9	196.4	221.4	14.00	22.40	34.04	39.56	47.45	58.10	70.14
1.0	1.0	1.0	1.0	1.0	1.0	1.0	1.1	1.1	1.1	1.1	1.1							
99.4	106.9	114.4	124.4	131.9	141.9	151.9	161.9	174.4	186.9	199.4	224.4	12.50	20.00	28.12	32.67	39.21	48.20	59.39
1.0	1.0	1.0	1.0	1.0	1.0	1.0	1.1	1.1	1.1	1.1	1.1							
97.9	105.4	112.9	122.9	130.4	140.4	150.4	160.4	172.9	185.4	197.9	222.9	13.20	21.20	30.90	35.90	43.09	52.88	64.61
1.0	1.0	1.0	1.0	1.0	1.0	1.0	1.1	1.1	1.1	1.1	1.1							
93.6	101.1	108.6	118.6	126.1	136.2	146.2	156.2	168.7	181.2	193.7	218.7	15.00	24.80	37.94	44.07	52.80	64.39	**
1.0	1.0	1.0	1.0	1.0	1.0	1.0	1.1	1.1	1.1	1.1	1.1							
87.1	94.6	102.1	112.1	119.7	129.7	139.7	149.7	162.2	174.7	187.2	212.2	18.00	30.00	49.33	57.17	68.08	81.68	**
1.0	1.0	1.0	1.0	1.0	1.0	1.0	1.0	1.1	1.1	1.1	1.1							
80.1	87.7	95.2	105.2	112.7	122.8	132.8	142.8	155.3	167.8	180.3	205.3	21.20	35.50	61.00	70.39	83.04	97.17	**
1.0	1.0	1.0	1.0	1.0	1.0	1.0	1.1	1.1	1.1	1.1	1.1							
98.4	105.9	113.4	123.5	131.0	141.0	151.0	161.0	173.5	186.0	198.5	223.5	12.50	21.20	28.12	32.67	39.21	48.20	59.39
1.0	1.0	1.0	1.0	1.0	1.0	1.0	1.1	1.1	1.1	1.1	1.1							
96.9	104.4	111.9	122.0	129.5	139.5	149.5	159.5	172.0	184.5	197.0	222.0	13.20	22.40	30.90	35.90	43.09	52.88	64.61
1.0	1.0	1.0	1.0	1.0	1.0	1.0	1.1	1.1	1.1	1.1	1.1							
87.8	95.4	102.9	112.9	120.4	130.4	140.4	150.4	163.0	175.5	188.0	213.0	17.00	30.00	45.58	52.87	63.12	76.20	**
1.0	1.0	1.0	1.0	1.0	1.0	1.0	1.0	1.1	1.1	1.1	1.1							
94.4	101.9	109.4	119.4	126.9	136.9	146.9	156.9	169.4	181.9	194.5	219.5	14.00	24.80	34.04	39.56	47.45	58.10	70.14
1.0	1.0	1.0	1.0	1.0	1.0	1.0	1.0	1.1	1.1	1.1	1.1							
81.0	88.6	96.1	106.1	113.6	123.7	133.7	143.7	156.2	166.7	181.2	206.3	20.00	35.50	56.68	65.53	77.60	91.74	**
1.0	1.0	1.0	1.0	1.0	1.0	1.0	1.0	1.1	1.1	1.1	1.1							

⚠**WARNING** ** = Sheave Rim Speed in excess of 6500 feet per minute — see page 236

POWER-WEDGE PRE-ENGINEERED DRIVE SELECTION TABLES

8V/8VX PRE-ENGINEERED TABLES Ratio 1.79-2.49

Driven Speed for Motor Speed of	Sheave Outside Diameters			V-Belt Number and Center Distance (Other sizes may be available, see page 214)															
1750 RPM	Small Sheave	Large Sheave	Speed Ratio	8VX 1000	8VX 1060	8VX 1120	8VX 1180	8VX 1250	8VX 1320	8VX 1400	8VX 1500	8VX 1600	8VX 1700	8VX 1900	8VX 1800	8VX 2000	8V 2120	8V 2240	8V 2360
976	22.40	40.00	1.79	—	—	—	—	—	—	—	—	—	34.9	40.0	45.1	50.2	56.3	62.4	68.4
				—	—	—	—	—	—	—	—	—	0.9	0.9	0.9	0.9	0.9	0.9	1.0
976	22.40	40.00	1.79	—	—	—	—	—	—	—	—	—	34.9	40.0	45.1	50.2	56.3	62.4	68.4
				—	—	—	—	—	—	—	—	—	0.9	0.9	0.9	0.9	0.9	0.9	1.0
970	12.50	22.40	1.80	22.0	25.1	28.2	31.2	34.7	38.3	42.3	47.3	52.4	57.4	62.4	67.4	72.4	78.4	84.4	90.5
				0.8	0.8	0.8	0.9	0.9	0.9	0.9	0.9	0.9	0.9	0.9	0.9	0.9	1.0	1.0	1.0
932	19.00	35.50	1.88	—	—	—	—	—	—	—	31.1	36.3	41.4	46.5	51.5	56.6	62.7	68.7	74.7
				—	—	—	—	—	—	—	0.9	0.9	0.9	0.9	0.9	0.9	0.9	1.0	1.0
928	16.00	30.00	1.89	—	—	—	—	25.4	29.0	33.1	38.2	43.3	48.4	53.4	58.5	63.5	69.5	75.5	81.6
				—	—	—	—	0.8	0.8	0.9	0.9	0.9	0.9	0.9	0.9	0.9	0.9	1.0	1.0
925	13.20	24.80	1.89	—	22.4	25.5	28.6	32.1	35.7	39.7	44.8	49.8	54.8	59.9	64.9	69.9	75.9	81.9	88.0
				—	0.8	0.8	0.8	0.9	0.9	0.9	0.9	0.9	0.9	0.9	0.9	0.9	1.0	1.0	1.0
923	21.20	40.00	1.90	—	—	—	—	—	—	—	—	—	35.7	40.9	46.0	51.1	57.2	63.2	69.3
				—	—	—	—	—	—	—	—	—	0.9	0.9	0.9	0.9	0.9	0.9	1.0
882	18.00	35.50	1.98	—	—	—	—	—	—	—	31.8	36.9	42.1	47.2	52.2	57.3	63.4	69.4	75.5
				—	—	—	—	—	—	—	0.8	0.9	0.9	0.9	0.9	0.9	0.9	0.9	1.0
877	22.40	44.50	2.00	—	—	—	—	—	—	—	—	—	—	35.7	41.0	46.1	52.3	58.4	64.5
				—	—	—	—	—	—	—	—	—	—	0.9	0.9	0.9	0.9	0.9	0.9
877	22.40	44.50	2.00	—	—	—	—	—	—	—	—	—	—	35.7	41.0	46.1	52.3	58.4	64.5
				—	—	—	—	—	—	—	—	—	—	0.9	0.9	0.9	0.9	0.9	0.9
875	12.50	24.80	2.00	—	22.9	26.0	29.1	32.6	36.2	40.2	45.3	50.3	55.4	60.4	65.4	70.4	76.5	82.5	88.5
				—	0.8	0.8	0.8	0.9	0.9	0.9	0.9	0.9	0.9	0.9	0.9	0.9	1.0	1.0	1.0
871	20.00	40.00	2.01	—	—	—	—	—	—	—	—	—	36.5	41.7	46.8	51.9	58.0	64.1	70.2
				—	—	—	—	—	—	—	—	—	0.9	0.9	0.9	0.9	0.9	0.9	1.0
869	15.00	30.00	2.01	—	—	—	—	26.1	29.7	33.8	38.9	44.0	49.1	54.1	59.2	64.2	70.3	76.3	82.3
				—	—	—	—	0.8	0.8	0.9	0.9	0.9	0.9	0.9	0.9	0.9	0.9	1.0	1.0
833	17.00	35.50	2.10	—	—	—	—	—	—	—	32.4	37.6	42.8	47.9	53.0	58.0	64.1	70.2	76.2
				—	—	—	—	—	—	—	0.8	0.9	0.9	0.9	0.9	0.9	0.9	0.9	1.0
830	21.20	44.50	2.11	—	—	—	—	—	—	—	—	—	—	36.5	41.8	47.0	53.1	59.3	65.4
				—	—	—	—	—	—	—	—	—	—	0.9	0.9	0.9	0.9	0.9	0.9
827	19.00	40.00	2.12	—	—	—	—	—	—	—	—	31.9	37.2	42.4	47.5	52.6	58.7	64.8	70.9
				—	—	—	—	—	—	—	—	0.8	0.9	0.9	0.9	0.9	0.9	0.9	1.0
810	14.00	30.00	2.16	—	—	—	—	26.7	30.4	34.5	39.6	44.7	49.8	54.9	59.9	64.9	71.0	77.0	83.1
				—	—	—	—	0.8	0.8	0.9	0.9	0.9	0.9	0.9	0.9	0.9	0.9	1.0	1.0
783	16.00	35.50	2.23	—	—	—	—	—	—	27.8	33.1	39.3	43.5	48.6	53.7	58.7	64.8	70.9	76.9
				—	—	—	—	—	—	0.8	0.8	0.9	0.9	0.9	0.9	0.9	0.9	0.9	1.0
783	18.00	40.00	2.24	—	—	—	—	—	—	—	—	32.6	37.8	43.0	48.2	53.3	59.4	65.5	71.6
				—	—	—	—	—	—	—	—	0.8	0.9	0.9	0.9	0.9	0.9	0.9	0.9
782	20.00	44.50	2.24	—	—	—	—	—	—	—	—	—	—	37.3	42.6	47.8	54.0	60.1	66.2
				—	—	—	—	—	—	—	—	—	—	0.9	0.9	0.9	0.9	0.9	0.9
763	13.20	30.00	2.29	—	—	—	23.6	27.3	30.9	35.1	40.2	45.3	50.4	55.4	60.5	65.5	71.6	77.6	83.6
				—	—	—	0.8	0.8	0.8	0.9	0.9	0.9	0.9	0.9	0.9	0.9	0.9	1.0	1.0
743	19.00	44.50	2.36	—	—	—	—	—	—	—	—	—	—	38.0	43.2	48.4	54.6	60.8	66.9
				—	—	—	—	—	—	—	—	—	—	0.9	0.9	0.9	0.9	0.9	0.9
739	17.00	40.00	2.37	—	—	—	—	—	—	—	—	33.2	38.5	43.7	48.9	54.0	60.1	66.2	72.3
				—	—	—	—	—	—	—	—	0.8	0.9	0.9	0.9	0.9	0.9	0.9	0.9
736	22.40	53.00	2.38	—	—	—	—	—	—	—	—	—	—	—	—	—	44.1	50.5	56.7
				—	—	—	—	—	—	—	—	—	—	—	—	—	0.9	0.9	0.9
736	22.40	53.00	2.38	—	—	—	—	—	—	—	—	—	—	—	—	—	44.1	50.5	56.7
				—	—	—	—	—	—	—	—	—	—	—	—	—	0.9	0.9	0.9
734	15.00	35.50	2.39	—	—	—	—	—	—	28.5	33.8	39.0	44.1	49.3	54.4	59.5	65.5	71.6	77.7
				—	—	—	—	—	—	0.8	0.8	0.9	0.9	0.9	0.9	0.9	0.9	0.9	1.0
722	12.50	30.00	2.42	—	—	—	24.0	27.7	31.4	35.5	40.7	45.8	50.9	55.9	61.0	66.0	72.1	78.1	84.2
				—	—	—	0.8	0.8	0.8	0.8	0.9	0.9	0.9	0.9	0.9	0.9	0.9	1.0	1.0
703	18.00	44.50	2.49	—	—	—	—	—	—	—	—	—	33.3	38.6	43.9	49.1	55.3	61.5	67.6
				—	—	—	—	—	—	—	—	—	0.8	0.8	0.9	0.9	0.9	0.9	0.9

⚠ **WARNING** ** = Sheave Rim Speed in excess of 6500 feet per minute — see page 236

POWER-WEDGE PRE-ENGINEERED DRIVE SELECTION TABLES

Ratio 1.79-2.49 8V/8VX PRE-ENGINEERED TABLES

V-Belt Number and Center Distance (Other sizes may be available, see page 214)												Sheave Outside Diameters		Rated HP per Belt — 8V & 8VX (includes Added HP for Speed Ratio) Super Power-Wedge & Power-Wedge Cog-Belt RPM of Small Sheave				
8V 2500	8V 2650	8V 2800	8V 3000	8V 3150	8V 3350	8V 3550	8V 3750	8V 4000	8V 4250	8V 4500	8V 5000	Small Sheave	Large Sheave	575 RPM	690 RPM	870 RPM	1160 RPM	1750 RPM
75.5	83.0	90.6	100.6	108.1	118.2	128.2	138.2	150.7	163.3	175.8	200.8	22.40	40.00	65.24	75.14	88.25	**	**
1.0	1.0	1.0	1.0	1.0	1.0	1.0	1.0	1.1	1.1	1.1	1.1							
75.5	83.0	90.6	100.6	108.1	118.2	128.2	138.2	150.7	163.3	175.8	200.8	22.40	40.00	65.24	75.14	88.25	**	**
1.0	1.0	1.0	1.0	1.0	1.0	1.0	1.0	1.1	1.1	1.1	1.1							
97.5	105.0	112.5	122.5	130.5	140.5	150.0	160.0	172.5	185.0	197.5	222.5	12.50	22.40	28.12	32.67	39.21	48.20	59.39
1.0	1.0	1.0	1.0	1.0	1.0	1.0	1.1	1.1	1.1	1.1	1.1							
81.8	89.3	96.8	106.9	114.4	124.4	134.4	144.5	157.0	169.5	182.0	207.0	19.00	35.50	53.03	61.39	72.91	86.87	**
1.0	1.0	1.0	1.0	1.0	1.0	1.0	1.0	1.1	1.1	1.1	1.1							
88.6	96.1	103.6	113.7	121.2	131.2	141.2	151.2	163.7	176.2	188.7	213.8	16.00	30.00	41.78	48.50	58.02	70.43	**
1.0	1.0	1.0	1.0	1.0	1.0	1.0	1.0	1.1	1.1	1.1	1.1							
95.0	102.5	110.0	120.0	127.5	137.5	147.5	157.5	170.1	182.6	195.1	220.1	13.20	24.80	30.90	43.09	52.88	64.61	
1.0	1.0	1.0	1.0	1.0	1.0	1.0	1.0	1.1	1.1	1.1	1.1							
76.4	83.9	91.5	101.5	109.0	119.1	129.1	139.1	151.6	164.2	176.7	201.7	21.20	40.00	61.00	70.39	83.04	97.17	**
1.0	1.0	1.0	1.0	1.0	1.0	1.0	1.0	1.1	1.1	1.1	1.1							
82.5	90.1	97.6	107.6	115.1	125.2	135.2	145.2	157.7	170.3	182.8	207.8	18.00	35.50	49.58	57.47	68.46	82.18	**
1.0	1.0	1.0	1.0	1.0	1.0	1.0	1.0	1.1	1.1	1.1	1.1							
71.6	79.2	86.8	96.8	104.4	114.4	124.5	134.5	147.0	159.6	172.1	197.1	22.40	44.50	65.49	75.44	88.63	**	**
1.0	1.0	1.0	1.0	1.0	1.0	1.0	1.0	1.0	1.1	1.1	1.1							
71.6	79.2	86.8	96.8	104.4	114.4	124.5	134.5	147.0	159.6	172.1	197.1	22.40	44.50	65.49	75.44	88.63	**	**
1.0	1.0	1.0	1.0	1.0	1.0	1.0	1.0	1.0	1.1	1.1	1.1							
95.5	103.0	110.5	120.5	128.1	138.1	148.1	158.1	170.6	183.1	195.6	220.6	12.50	24.80	28.37	32.97	39.59	48.70	60.14
1.0	1.0	1.0	1.0	1.0	1.0	1.0	1.0	1.1	1.1	1.1	1.1							
77.2	84.8	92.3	102.4	109.9	120.0	130.0	140.0	15205	165.1	177.6	202.6	20.00	40.00	56.93	65.83	77.98	92.24	**
1.0	1.0	1.0	1.0	1.0	1.0	1.0	1.0	1.0	1.1	1.1	1.1							
89.3	96.9	104.4	114.4	121.9	131.9	142.0	152.0	164.5	177.0	189.5	214.5	15.00	30.00	38.19	44.36	53.17	64.90	**
1.0	1.0	1.0	1.0	1.0	1.0	1.0	1.0	1.1	1.1	1.1	1.1							
83.3	90.8	98.3	108.4	115.9	125.9	136.0	146.0	158.5	171.0	183.5	208.6	17.00	35.50	45.83	53.17	63.49	76.70	**
1.0	1.0	1.0	1.0	1.0	1.0	1.0	1.0	1.1	1.1	1.1	1.1							
72.5	80.1	87.6	97.7	105.3	115.3	125.4	135.4	147.9	160.5	173.0	198.1	21.20	44.50	61.25	70.69	83.41	97.67	**
1.0	1.0	1.0	1.0	1.0	1.0	1.0	1.0	1.0	1.1	1.1	1.1							
78.0	85.5	93.1	103.1	110.7	120.7	130.7	140.8	153.3	165.8	178.4	203.4	19.00	40.00	53.28	61.68	73.29	87.37	**
1.0	1.0	1.0	1.0	1.0	1.0	1.0	1.0	1.0	1.1	1.1	1.1							
90.1	97.6	105.1	115.2	122.7	132.7	142.7	152.7	165.2	177.8	190.3	215.3	14.00	30.00	34.29	39.86	47.83	58.60	70.89
1.0	1.0	1.0	1.0	1.0	1.0	1.0	1.0	1.1	1.1	1.1	1.1							
84.0	91.5	109.1	116.6	126.7	136.7	146.7	159.3	171.8	184.3		209.3	16.00	35.50	42.03	48.80	58.40	70.93	**
1.0	1.0	1.0	1.0	1.0	1.0	1.0	1.0	1.1	1.1	1.1	1.1							
78.7	86.2	93.8	103.9	111.4	121.4	131.5	141.5	154.1	166.6	179.1	204.2	18.00	40.00	49.58	57.47	68.46	82.18	**
1.0	1.0	1.0	1.0	1.0	1.0	1.0	1.0	1.0	1.1	1.1	1.1							
73.3	80.9	88.5	98.6	106.1	116.2	126.2	136.3	148.8	161.4	173.9	199.0	20.00	44.50	56.93	65.83	77.98	92.24	**
1.0	1.0	1.0	1.0	1.0	1.0	1.0	1.0	1.0	1.1	1.1	1.1							
90.7	98.2	105.7	115.8	123.3	133.3	143.3	153.3	165.9	178.4	190.9	215.9	13.20	30.00	31.15	36.20	43.47	53.39	65.37
1.0	1.0	1.0	1.0	1.0	1.0	1.0	1.0	1.1	1.1	1.1	1.1							
74.0	81.6	89.2	99.3	106.9	116.9	127.0	137.0	149.6	162.1	174.7	199.7	19.00	44.50	53.28	61.68	73.29	87.37	**
1.0	1.0	1.0	1.0	1.0	1.0	1.0	1.0	1.0	1.1	1.1	1.1							
79.4	87.0	94.5	104.6	112.1	122.2	132.2	142.3	154.8	167.3	179.9	204.9	17.00	40.00	45.83	53.17	63.49	76.70	**
1.0	1.0	1.0	1.0	1.0	1.0	1.0	1.0	1.0	1.1	1.1	1.1							
64.0	71.6	79.3	89.5	97.1	107.2	117.3	127.4	139.9	152.5	165.1	190.2	22.40	53.00	65.49	75.44	88.63	**	**
1.0	1.0	1.0	1.0	1.0	1.0	1.0	1.0	1.0	1.0	1.1	1.1							
64.0	71.6	79.3	89.5	97.1	107.2	117.3	127.4	139.9	152.5	165.1	190.2	22.40	53.00	65.49	75.44	88.63	**	**
1.0	1.0	1.0	1.0	1.0	1.0	1.0	1.0	1.0	1.0	1.1	1.1							
84.7	92.3	99.8	109.9	117.4	127.4	137.5	147.5	160.0	172.5	185.1	210.1	15.00	35.50	38.19	44.36	53.17	64.90	**
1.0	1.0	1.0	1.0	1.0	1.0	1.0	1.0	1.1	1.1	1.1	1.1							
91.2	98.7	106.3	116.3	123.8	133.8	143.9	153.9	166.4	178.9	191.4	216.4	12.50	30.00	28.37	32.97	39.59	48.70	60.14
1.0	1.0	1.0	1.0	1.0	1.0	1.0	1.0	1.1	1.1	1.1	1.1							
74.7	82.3	89.9	100.0	107.6	117.7	127.7	137.8	150.3	162.9	175.4	200.5	18.00	44.50	49.58	57.47	68.46	82.18	**
1.0	1.0	1.0	1.0	1.0	1.0	1.0	1.0	1.0	1.1	1.1	1.1							

⚠**WARNING** ** = Sheave Rim Speed in excess of 6500 feet per minute — see page 236

POWER-WEDGE PRE-ENGINEERED DRIVE SELECTION TABLES

8V/8VX PRE-ENGINEERED TABLES Ratio 2.51-3.53

Driven Speed for Motor Speed of	Sheave Outside Diameters			V-Belt Number and Center Distance (Other sizes may be available, see page 214)															
1750 RPM	Small Sheave	Large Sheave	Speed Ratio	8VX 1000	8VX 1060	8VX 1120	8VX 1180	8VX 1250	8VX 1320	8VX 1400	8VX 1500	8VX 1600	8VX 1700	8VX 1900	8VX 1800	8VX 2000	8V 2120	8V 2240	8V 2360
696	21.20	53.00	2.51	—	—	—	—	—	—	—	—	—	—	—	—	—	44.9	51.3	57.5
				—	—	—	—	—	—	—	—	—	—	—	—	—	0.9	0.9	0.9
695	16.00	40.00	2.52	—	—	—	—	—	—	—	—	33.9	39.2	44.4	49.6	54.7	60.8	66.9	73.0
				—	—	—	—	—	—	—	—	0.8	0.9	0.9	0.9	0.9	0.9	0.9	0.9
684	14.00	35.50	2.56	—	—	—	—	—	—	29.1	34.4	39.7	44.8	50.0	55.1	60.2	66.3	72.3	78.4
				—	—	—	—	—	—	0.8	0.8	0.9	0.9	0.9	0.9	0.9	0.9	0.9	1.0
664	17.00	44.50	2.64	—	—	—	—	—	—	—	—	—	33.9	39.3	44.6	49.8	56.0	62.2	68.3
				—	—	—	—	—	—	—	—	—	0.8	0.8	0.9	0.9	0.9	0.9	0.9
656	20.00	53.00	2.67	—	—	—	—	—	—	—	—	—	—	—	—	39.2	45.7	52.1	58.3
				—	—	—	—	—	—	—	—	—	—	—	—	0.8	0.9	0.9	0.9
651	15.00	40.00	2.69	—	—	—	—	—	—	—	29.1	34.5	39.8	45.1	50.2	55.4	61.5	67.6	73.7
				—	—	—	—	—	—	—	0.8	0.8	0.9	0.9	0.9	0.9	0.9	0.9	0.9
644	13.20	35.50	2.72	—	—	—	—	—	—	29.7	35.0	40.2	45.4	50.5	55.6	60.7	66.8	72.9	79.0
				—	—	—	—	—	—	0.8	0.8	0.9	0.9	0.9	0.9	0.9	0.9	0.9	1.0
624	16.00	44.50	2.80	—	—	—	—	—	—	—	—	—	34.5	39.9	45.2	50.5	56.7	62.9	69.0
				—	—	—	—	—	—	—	—	—	0.8	0.8	0.9	0.9	0.9	0.9	0.9
623	19.00	53.00	2.81	—	—	—	—	—	—	—	—	—	—	—	—	39.8	46.3	52.7	59.0
				—	—	—	—	—	—	—	—	—	—	—	—	0.8	0.9	0.9	0.9
619	22.40	63.00	2.83	—	—	—	—	—	—	—	—	—	—	—	—	—	—	—	46.5
				—	—	—	—	—	—	—	—	—	—	—	—	—	—	—	0.8
619	22.40	63.00	2.83	—	—	—	—	—	—	—	—	—	—	—	—	—	—	—	46.5
				—	—	—	—	—	—	—	—	—	—	—	—	—	—	—	0.8
610	12.50	35.50	2.87	—	—	—	—	—	25.7	30.1	35.4	40.7	45.9	51.0	56.1	61.2	67.3	73.4	79.5
				—	—	—	—	—	0.8	0.8	0.8	0.9	0.9	0.9	0.9	0.9	0.9	0.9	1.0
607	14.00	40.00	2.88	—	—	—	—	—	—	—	29.7	35.2	40.5	45.7	50.9	56.1	62.2	68.4	74.5
				—	—	—	—	—	—	—	0.8	0.8	0.8	0.9	0.9	0.9	0.9	0.9	0.9
590	18.00	53.00	2.97	—	—	—	—	—	—	—	—	—	—	—	—	40.5	47.0	53.4	59.7
				—	—	—	—	—	—	—	—	—	—	—	—	0.8	0.9	0.9	0.9
585	21.20	63.00	2.99	—	—	—	—	—	—	—	—	—	—	—	—	—	—	—	47.2
				—	—	—	—	—	—	—	—	—	—	—	—	—	—	—	0.8
585	15.00	44.50	2.99	—	—	—	—	—	—	—	—	—	35.2	40.6	45.9	51.1	57.4	63.6	69.7
				—	—	—	—	—	—	—	—	—	0.8	0.8	0.9	0.9	0.9	0.9	0.9
572	13.20	40.00	3.06	—	—	—	—	—	—	—	30.2	35.7	41.0	46.3	51.5	56.6	62.8	68.9	75.0
				—	—	—	—	—	—	—	0.8	0.8	0.8	0.9	0.9	0.9	0.9	0.9	0.9
557	17.00	53.00	3.14	—	—	—	—	—	—	—	—	—	—	—	—	41.1	47.6	54.0	60.3
				—	—	—	—	—	—	—	—	—	—	—	—	0.8	0.9	0.9	0.9
552	20.00	63.00	3.17	—	—	—	—	—	—	—	—	—	—	—	—	—	—	—	48.0
				—	—	—	—	—	—	—	—	—	—	—	—	—	—	—	0.8
549	22.40	71.00	3.019	—	—	—	—	—	—	—	—	—	—	—	—	—	—	—	—
				—	—	—	—	—	—	—	—	—	—	—	—	—	—	—	—
549	22.40	71.00	3.19	—	—	—	—	—	—	—	—	—	—	—	—	—	—	—	—
				—	—	—	—	—	—	—	—	—	—	—	—	—	—	—	—
545	14.00	44.50	3.21	—	—	—	—	—	—	—	—	—	35.8	41.2	46.6	51.8	58.1	64.2	70.4
				—	—	—	—	—	—	—	—	—	0.8	0.8	0.9	0.9	0.9	0.9	0.9
541	12.50	40.00	3.24	—	—	—	—	—	—	—	30.7	36.2	41.5	46.7	51.9	57.1	63.3	69.4	75.5
				—	—	—	—	—	—	—	0.8	0.8	0.8	0.9	0.9	0.9	0.9	0.9	0.9
524	19.00	63.00	3.34	—	—	—	—	—	—	—	—	—	—	—	—	—	—	—	48.6
				—	—	—	—	—	—	—	—	—	—	—	—	—	—	—	0.8
524	16.00	53.00	3.34	—	—	—	—	—	—	—	—	—	—	—	36.1	41.7	48.3	54.7	61.0
				—	—	—	—	—	—	—	—	—	—	—	0.8	0.8	0.9	0.9	0.9
519	21.20	71.00	3.37	—	—	—	—	—	—	—	—	—	—	—	—	—	—	—	—
				—	—	—	—	—	—	—	—	—	—	—	—	—	—	—	—
514	13.20	44.50	3.41	—	—	—	—	—	—	—	—	30.7	36.3	41.7	47.1	52.3	58.6	64.8	71.0
				—	—	—	—	—	—	—	—	0.8	0.8	0.8	0.9	0.9	0.9	0.9	0.9
496	18.00	63.00	3.53	—	—	—	—	—	—	—	—	—	—	—	—	—	—	42.4	49.2
				—	—	—	—	—	—	—	—	—	—	—	—	—	—	0.8	0.8

⚠ **WARNING** ** = Sheave Rim Speed in excess of 6500 feet per minute — see page 236

POWER-WEDGE PRE-ENGINEERED DRIVE SELECTION TABLES

Ratio 2.51-3.53 8V/8VX PRE-ENGINEERED TABLES

V-Belt Number and Center Distance (Other sizes may be available, see page 214)												Sheave Outside Diameters		Rated HP per Belt — 8V & 8VX (includes Added HP for Speed Ratio) Super Power-Wedge & Power-Wedge Cog-Belt RPM of Small Sheave				
8V 2500	8V 2650	8V 2800	8V 3000	8V 3150	8V 3350	8V 3550	8V 3750	8V 4000	8V 4250	8V 4500	8V 5000	Small Sheave	Large Sheave	575 RPM	690 RPM	870 RPM	1160 RPM	1750 RPM
64.8	72.5	80.1	90.3	97.9	108.1	118.2	128.2	140.8	153.4	166.0	191.1	21.20	53.00	61.25	70.69	83.41	97.67	**
0.9	0.9	1.0	1.0	1.0	1.0	1.0	1.0	1.0	1.0	1.1	1.1							
80.1	87.7	95.3	105.3	112.9	122.9	133.0	143.0	155.6	168.1	180.6	205.7	16.00	40.00	42.03	48.80	58.40	70.93	**
1.0	1.0	1.0	1.0	1.0	1.0	1.0	1.0	1.0	1.1	1.1	1.1							
85.4	93.0	100.5	110.6	118.1	128.2	138.2	148.2	160.8	173.3	185.8	210.8	14.00	35.50	34.29	39.86	47.83	58.60	70.89
1.0	1.0	1.0	1.0	1.0	1.0	1.0	1.0	1.0	1.1	1.1	1.1							
75.4	83.1	90.7	100.8	108.3	118.4	128.5	138.5	151.1	163.6	176.2	201.2	17.00	44.50	45.83	53.17	63.49	76.70	**
0.9	1.0	1.0	1.0	1.0	1.0	1.0	1.0	1.0	1.1	1.1	1.1							
65.6	73.3	81.0	91.2	98.8	108.9	119.0	129.1	141.7	154.3	166.9	192.0	20.00	53.00	56.93	65.83	77.98	92.24	**
0.9	1.0	1.0	1.0	1.0	1.0	1.0	1.0	1.0	1.0	1.1	1.1							
80.8	88.4	96.0	106.1	113.6	123.7	133.7	143.8	156.3	168.8	181.4	206.4	15.00	40.00	38.19	44.36	53.17	64.90	**
1.0	1.0	1.0	1.0	1.0	1.0	1.0	1.0	1.0	1.1	1.1	1.1							
96.0	93.6	101.1	111.2	118.7	128.8	138.8	148.8	161.4	173.9	186.4	211.5	13.20	35.50	31.15	36.20	43.47	53.39	65.37
1.0	1.0	1.0	1.0	1.0	1.0	1.0	1.0	1.0	1.1	1.1	1.1							
76.2	83.8	91.4	101.5	109.1	119.1	129.2	139.3	151.8	164.4	176.9	202.0	16.00	44.50	42.03	48.80	58.40	70.93	**
0.9	1.0	1.0	1.0	1.0	1.0	1.0	1.0	1.0	1.1	1.1	1.1							
66.3	74.0	81.7	91.9	99.5	109.6	119.7	129.8	142.4	155.0	167.6	192.7	19.00	53.00	53.28	61.68	73.29	87.37	**
0.9	0.9	1.0	1.0	1.0	1.0	1.0	1.0	1.0	1.1	1.1	1.1							
54.1	62.1	70.0	80.4	88.1	98.3	108.5	118.7	131.4	144.0	156.6	181.8	22.40	63.00	65.49	75.44	88.63	**	**
0.9	0.9	0.9	0.9	1.0	1.0	1.0	1.0	1.0	1.0	1.0	1.1							
54.1	62.1	70.0	80.4	88.1	98.3	108.5	118.7	131.4	144.0	156.6	181.8	22.40	63.00	65.49	75.44	88.63	**	**
0.9	0.9	0.9	0.9	1.0	1.0	1.0	1.0	1.0	1.0	1.0	1.1							
86.5	94.1	101.7	111.7	119.2	129.3	139.3	149.4	161.9	174.4	186.9	212.0	12.50	35.50	28.37	32.97	39.59	48.70	60.14
1.0	1.0	1.0	1.0	1.0	1.0	1.0	1.0	1.0	1.1	1.1	1.1							
81.6	89.1	96.7	106.8	114.3	124.4	134.5	144.5	157.1	169.6	182.1	207.2	14.00	40.00	34.29	39.86	47.83	58.60	70.89
1.0	1.0	1.0	1.0	1.0	1.0	1.0	1.0	1.0	1.1	1.1	1.1							
66.9	74.7	82.4	92.6	100.2	110.3	120.5	130.6	143.2	155.8	168.3	193.4	18.00	53.00	49.58	57.47	68.46	82.18	**
0.9	0.9	1.0	1.0	1.0	1.0	1.0	1.0	1.0	1.0	1.1	1.1							
54.9	62.9	70.8	81.2	88.9	99.2	109.4	119.5	132.2	144.9	157.5	182.7	21.20	63.00	61.25	70.69	83.41	97.69	**
0.9	0.9	0.9	0.9	1.0	1.0	1.0	1.0	1.0	1.0	1.0	1.1							
76.9	84.5	92.1	102.2	109.8	119.9	129.9	140.0	152.6	165.1	177.7	202.7	15.00	44.50	38.19	44.36	53.17	64.90	**
0.9	1.0	1.0	1.0	1.0	1.0	1.0	1.0	1.0	1.1	1.1	1.1							
82.1	89.7	97.3	107.4	114.9	125.0	135.1	145.1	157.6	170.2	182.7	207.8	13.20	40.00	31.15	36.20	43.47	43.39	65.37
1.0	1.0	1.0	1.0	1.0	1.0	1.0	1.0	1.0	1.1	1.1	1.1							
67.6	75.4	83.1	93.3	100.9	111.1	121.2	131.3	143.9	156.5	169.1	194.2	17.00	53.00	45.83	53.17	63.49	76.70	**
0.9	0.9	1.0	1.0	1.0	1.0	1.0	1.0	1.0	1.0	1.1	1.1							
55.7	63.7	71.6	82.0	89.7	100.0	110.2	120.4	133.1	145.7	158.4	183.6	20.00	63.00	56.93	65.83	77.98	92.24	**
0.9	0.9	0.9	0.9	1.0	1.0	1.0	1.0	1.0	1.0	1.0	1.1							
—	53.6	61.9	72.6	80.5	90.9	101.2	111.5	124.3	137.0	149.7	175.0	22.40	71.00	65.49	75.44	88.63	**	**
—	0.9	0.9	0.9	0.9	1.0	1.0	1.0	1.0	1.0	1.0	1.1							
—	53.6	61.9	72.6	80.5	90.9	101.2	111.5	124.3	137.0	149.7	175.0	22.40	71.00	65.49	75.44	88.63	**	**
—	0.9	0.9	0.9	0.9	1.0	1.0	1.0	1.0	1.0	1.0	1.1							
77.6	85.2	92.8	102.9	110.5	120.6	130.7	140.7	153.3	165.9	178.4	203.5	14.00	44.50	34.29	39.86	47.83	58.60	70.89
	0.9	1.0	1.0	1.0	1.0	1.0	1.0	1.0	1.1	1.1	1.1							
82.6	90.2	97.8	107.9	115.4	125.5	135.6	145.6	158.2	170.7	183.3	208.3	12.50	40.00	28.37	32.97	39.59	48.70	60.14
1.0	1.0	1.0	1.0	1.0	1.0	1.0	1.0	1.0	1.1	1.1	1.1							
56.3	64.3	72.2	82.7	90.4	100.7	110.9	121.1	133.8	146.4	159.1	184.3	19.00	63.00	53.28	61.68	73.29	87.37	**
0.9	0.9	0.9	0.9	1.0	1.0	1.0	1.0	1.0	1.0	1.0	1.1							
68.3	76.1	83.8	94.0	101.6	111.8	121.9	132.0	144.6	157.2	169.8	194.9	16.00	53.00	42.03	48.80	58.40	70.93	**
0.9	0.9	1.0	1.0	1.0	1.0	1.0	1.0	1.0	1.0	1.1	1.1							
—	54.4	62.6	73.4	81.3	91.7	102.0	112.3	125.1	137.8	150.5	175.8	21.20	71.00	61.25	70.69	83.41	97.67	**
—	0.9	0.9	0.9	0.9	1.0	1.0	1.0	1.0	1.0	1.0	1.1							
78.1	85.8	93.4	103.5	111.1	121.2	131.2	141.3	153.9	166.4	179.0	204.1	13.20	44.50	31.33	36.42	43.74	53.75	65.91
0.9	1.0	1.0	1.0	1.0	1.0	1.0	1.0	1.0	1.1	1.1	1.1							
56.9	65.0	72.9	83.3	91.1	101.4	111.6	121.8	134.5	147.2	159.8	185.0	18.00	63.00	49.76	57.68	68.73	82.55	**
0.9	0.9	0.9	0.9	1.0	1.0	1.0	1.0	1.0	1.0	1.0	1.1							

⚠**WARNING** ** = Sheave Rim Speed in excess of 6500 feet per minute — see page 236

POWER-WEDGE PRE-ENGINEERED DRIVE SELECTION TABLES

8V/8VX PRE-ENGINEERED TABLES Ratio 3.57-5.76

Driven Speed for Motor Speed of	Sheave Outside Diameters		V-Belt Number and Center Distance (Other sizes may be available, see page 214)																
1750 RPM	Small Sheave	Large Sheave	Speed Ratio	8VX 1000	8VX 1060	8VX 1120	8VX 1180	8VX 1250	8VX 1320	8VX 1400	8VX 1500	8VX 1600	8VX 1700	8VX 1900	8VX 1800	8VX 2000	8V 2120	8V 2240	8V 2360
491	15.00	53.00	3.57	—	—	—	—	—	—	—	—	—	—	—	36.7	42.3	48.9	55.3	61.7
				—	—	—	—	—	—	—	—	—	—	—	0.8	0.8	0.9	0.9	0.9
489	20.00	71.00	3.58	—	—	—	—	—	—	—	—	—	—	—	—	—	—	—	—
				—	—	—	—	—	—	—	—	—	—	—	—	—	—	—	—
486	12.50	44.50	3.60	—	—	—	—	—	—	—	—	31.1	36.7	42.2	47.5	52.8	59.1	65.3	71.4
				—	—	—	—	—	—	—	—	0.8	0.8	0.8	0.9	0.9	0.9	0.9	0.9
468	17.00	63.00	3.74	—	—	—	—	—	—	—	—	—	—	—	—	—	—	43.0	49.9
				—	—	—	—	—	—	—	—	—	—	—	—	—	—	0.8	0.8
465	19.00	71.00	3.77	—	—	—	—	—	—	—	—	—	—	—	—	—	—	—	—
				—	—	—	—	—	—	—	—	—	—	—	—	—	—	—	—
457	14.00	53.00	3.83	—	—	—	—	—	—	—	—	—	—	—	37.3	43.0	49.5	56.0	62.3
				—	—	—	—	—	—	—	—	—	—	—	0.8	0.8	0.9	0.9	0.9
440	16.00	63.00	3.97	—	—	—	—	—	—	—	—	—	—	—	—	—	—	43.6	50.5
				—	—	—	—	—	—	—	—	—	—	—	—	—	—	0.8	0.8
440	18.00	71.00	3.98	—	—	—	—	—	—	—	—	—	—	—	—	—	—	—	—
				—	—	—	—	—	—	—	—	—	—	—	—	—	—	—	—
431	13.20	53.00	4.06	—	—	—	—	—	—	—	—	—	—	—	37.8	43.4	50.1	56.5	62.9
				—	—	—	—	—	—	—	—	—	—	—	0.8	0.8	0.8	0.9	0.9
415	17.00	71.00	4.21	—	—	—	—	—	—	—	—	—	—	—	—	—	—	—	—
				—	—	—	—	—	—	—	—	—	—	—	—	—	—	—	—
412	15.00	63.00	4.24	—	—	—	—	—	—	—	—	—	—	—	—	—	—	44.2	51.1
				—	—	—	—	—	—	—	—	—	—	—	—	—	—	0.8	0.8
408	12.50	53.00	4.29	—	—	—	—	—	—	—	—	—	—	—	38.2	43.9	50.5	57.0	63.3
				—	—	—	—	—	—	—	—	—	—	—	0.8	0.8	0.8	0.9	0.9
391	16.00	71.00	4.48	—	—	—	—	—	—	—	—	—	—	—	—	—	—	—	—
				—	—	—	—	—	—	—	—	—	—	—	—	—	—	—	—
385	14.00	63.00	4.55	—	—	—	—	—	—	—	—	—	—	—	—	—	—	44.8	51.7
				—	—	—	—	—	—	—	—	—	—	—	—	—	—	0.8	0.8
366	15.00	71.00	4.78	—	—	—	—	—	—	—	—	—	—	—	—	—	—	—	—
				—	—	—	—	—	—	—	—	—	—	—	—	—	—	—	—
362	13.20	63.00	4.83	—	—	—	—	—	—	—	—	—	—	—	—	—	—	45.3	52.2
				—	—	—	—	—	—	—	—	—	—	—	—	—	—	0.8	0.8
343	12.50	63.00	5.11	—	—	—	—	—	—	—	—	—	—	—	—	—	—	45.7	52.6
				—	—	—	—	—	—	—	—	—	—	—	—	—	—	0.8	0.8
341	14.00	71.00	5.13	—	—	—	—	—	—	—	—	—	—	—	—	—	—	—	—
				—	—	—	—	—	—	—	—	—	—	—	—	—	—	—	—
321	13.20	71.00	5.45	—	—	—	—	—	—	—	—	—	—	—	—	—	—	—	—
				—	—	—	—	—	—	—	—	—	—	—	—	—	—	—	—
304	12.50	71.00	5.76	—	—	—	—	—	—	—	—	—	—	—	—	—	—	—	—
				—	—	—	—	—	—	—	—	—	—	—	—	—	—	—	—

⚠ **WARNING** ** = Sheave Rim Speed in excess of 6500 feet per minute — see page 236

POWER-WEDGE PRE-ENGINEERED DRIVE SELECTION TABLES

Ratio 3.57-5.76 8V/8VX PRE-ENGINEERED TABLES

V-Belt Number and Center Distance (Other sizes may be available, see page 214)												Sheave Outside Diameters		Rated HP per Belt — 8V & 8VX (includes Added HP for Speed Ratio) Super Power-Wedge & Power-Wedge Cog-Belt RPM of Small Sheave				
8V 2500	8V 2650	8V 2800	8V 3000	8V 3150	8V 3350	8V 3550	8V 3750	8V 4000	8V 4250	8V 4500	8V 5000	Small Sheave	Large Sheave	575 RPM	690 RPM	870 RPM	1160 RPM	1750 RPM
69.0	76.7	84.5	94.7	102.3	112.5	122.6	132.7	145.4	158.0	170.5	195.7	15.00	53.00	38.37	44.58	53.45	65.26	**
0.9	0.9	1.0	1.0	1.0	1.0	1.0	1.0	1.0	1.0	1.1	1.1							
—	55.1	63.4	74.1	82.1	92.5	102.9	113.2	125.9	138.7	151.4	176.7	20.00	71.00	57.11	66.04	78.25	92.61	**
—	0.8	0.9	0.9	0.9	1.0	1.0	1.0	1.0	1.0	1.0	1.1							
78.6	86.2	93.9	104.0	111.6	121.7	131.8	141.8	154.4	167.0	179.5	204.6	12.50	44.50	28.55	33.18	39.86	49.06	60.69
0.9	1.0	1.0	1.0	1.0	1.0	1.0	1.0	1.0	1.0	1.1	1.1							
57.6	65.6	73.6	84.0	91.8	102.1	112.3	122.5	135.2	147.9	160.5	185.7	17.00	63.00	46.01	53.39	63.77	77.06	**
0.9	0.9	0.9	0.9	1.0	1.0	1.0	1.0	1.0	1.0	1.0	1.1							
47.1	55.8	64.0	74.8	82.7	93.2	103.6	113.8	126.6	139.4	152.1	177.4	19.00	71.00	53.46	61.90	73.56	87.73	**
0.8	0.8	0.9	0.9	0.9	1.0	1.0	1.0	1.0	1.0	1.0	1.1							
69.6	77.4	85.1	95.4	103.0	113.2	123.3	133.5	146.1	158.7	171.3	196.4	14.00	53.00	34.47	40.07	48.10	58.96	71.44
0.9	0.9	0.9	1.0	1.0	1.0	1.0	1.0	1.0	1.0	1.1	1.1							
58.2	66.3	74.2	84.7	92.5	102.8	113.0	123.2	135.9	148.6	161.2	185.5	16.00	63.00	42.21	49.02	58.67	71.30	**
0.9	0.9	0.9	0.9	1.0	1.0	1.0	1.0	1.0	1.0	1.0	1.1							
47.7	56.4	64.7	75.4	83.4	93.9	104.2	114.5	127.3	140.1	152.8	178.1	18.00	71.00	49.76	57.68	68.73	82.55	**
0.8	0.8	0.9	0.9	0.9	1.0	1.0	1.0	1.0	1.0	1.0	1.1							
70.2	78.0	85.7	95.9	103.6	113.8	123.9	134.0	146.7	159.3	171.9	197.0	13.20	530.00	31.33	36.42	43.74	53.75	65.91
0.9	0.9	0.9	1.0	1.0	1.0	1.0	1.0	1.0	1.0	1.1	1.1							
48.3	57.0	65.3	76.1	84.0	94.5	104.9	115.2	128.0	140.8	153.5	178.8	17.00	71.00	46.01	53.39	63.77	77.06	**
0.8	0.8	0.9	0.9	0.9	1.0	1.0	1.0	1.0	1.0	1.0	1.1							
58.8	66.9	74.9	85.4	93.1	103.5	113.7	123.9	136.6	149.3	162.0	187.2	15.00	63.00	38.37	44.58	53.45	65.26	**
0.9	0.9	0.9	0.9	1.0	1.0	1.0	1.0	1.0	1.0	1.0	1.1							
70.7	78.4	86.2	96.4	104.1	114.3	124.4	134.5	147.2	159.8	172.4	179.6	16.00	71.00	42.21	49.02	58.67	71.30	**
0.9	0.9	0.9	1.0	1.0	1.0	1.0	1.0	1.0	1.0	1.1	1.1							
48.9	57.6	65.9	76.7	84.7	95.2	105.6	115.9	128.7	141.5	154.2	187.9	14.00	63.00	34.47	40.07	48.10	58.96	71.44
0.8	0.8	0.9	0.9	0.9	1.0	1.0	1.0	1.0	1.0	1.0	1.1							
59.5	67.6	75.6	86.0	93.8	104.1	114.4	124.6	137.3	150.0	162.7	180.3	15.00	71.00	38.37	44.58	53.45	65.26	**
0.9	0.9	0.9	0.9	1.0	1.0	1.0	1.0	1.0	1.0	1.0	1.1							
49.5	58.2	66.6	77.4	85.4	95.9	106.3	116.6	129.4	142.2	154.9	188.5	13.20	63.00	31.33	36.42	43.74	53.75	65.91
0.8	0.8	0.9	0.9	0.9	1.0	1.0	1.0	1.0	1.0	1.0	1.1							
60.0	68.1	76.1	86.6	94.4	104.7	115.0	125.2	137.9	150.6	163.3	189.0	12.50	63.00	28.55	33.18	39.86	49.06	60.69
0.9	0.9	0.9	0.9	1.0	1.0	1.0	1.0	1.0	1.0	1.0	1.1							
60.4	68.6	76.5	87.0	94.8	105.2	115.4	125.7	138.4	151.1	163.8	181.0	14.00	71.00	34.47	40.07	48.10	58.96	71.44
0.9	0.9	0.9	0.9	1.0	1.0	1.0	1.0	1.0	1.0	1.0	1.1							
50.1	58.8	67.2	78.0	86.0	96.5	106.9	117.3	130.1	142.9	155.6	181.6	13.20	71.00	31.33	36.42	43.74	53.75	65.91
0.8	0.8	0.9	0.9	0.9	0.9	1.0	1.0	1.0	1.0	1.0	1.1							
50.6	59.3	67.7	78.6	86.5	97.1	107.5	117.8	130.7	143.5	156.2	182.1	12.50	71.00	28.55	33.18	39.86	49.06	60.69
0.8	0.8	0.9	0.9	0.9	0.9	1.0	1.0	1.0	1.0	1.0	1.1							
51.0	59.8	68.1	79.0	87.0	97.5	108.0	118.3	131.2	143.9	156.7								
0.8	0.8	0.9	0.9	0.9	0.9	1.0	1.0	1.0	1.0	1.0								

⚠ **WARNING** ** = Sheave Rim Speed in excess of 6500 feet per minute — see page 236

CLASSICAL SECTION PRE-ENGINEERED DRIVE SELECTION TABLES

A, AP, AK & AX PRE-ENGINEERED TABLES RATIO 1.00 - 1.12

Driven Speed for Motor Speed of			Sheave Datum Diameters		V-Belt Number and Center Distance (other sizes may be available, see page 215)																	
1160 RPM	1750 RPM	3450 RPM	Small Sheave	Large Sheave	Speed Ratio	A 26	A 29	A 31	A 33	A 35	A 37	A 40	A 42	A 43	A 46	A 49	A 53	A 57	A 60	A 65	A 68	A 71
1160	1750	3450	3.00	3.00	1.00	8.9	10.4	11.4	12.4	13.4	14.4	15.9	16.9	17.4	18.9	20.4	22.4	24.4	25.9	28.4	29.9	31.4
						0.8	0.8	0.9	0.9	0.9	0.9	0.9	0.9	0.9	0.9	0.9	1.0	1.0	1.0	1.0	1.0	1.0
1160	1750	3450	3.20	3.20	3.20	8.6	10.1	11.1	12.1	13.1	14.1	15.6	16.6	17.1	18.6	20.1	22.1	24.1	25.6	28.1	29.6	31.1
						0.8	0.8	0.9	0.9	0.9	0.9	0.9	0.9	0.9	0.9	0.9	1.0	1.0	1.0	1.0	1.0	1.0
1160	1750	3450	3.40	3.40	1.00	8.3	9.8	10.8	11.8	12.8	13.8	15.3	16.3	16.8	18.3	19.8	21.8	23.8	25.3	27.8	29.3	30.8
						0.8	0.8	0.9	0.9	0.9	0.9	0.9	0.9	0.9	0.9	0.9	1.0	1.0	1.0	1.0	1.0	1.0
1160	1750	3450	3.60	3.60	1.00	8.0	9.5	10.5	11.5	12.5	13.5	15.0	16.0	16.5	18.0	19.5	21.5	23.5	25.0	27.5	29.0	30.5
						0.8	0.8	0.9	0.9	0.9	0.9	0.9	0.9	0.9	0.9	0.9	1.0	1.0	1.0	1.0	1.0	1.0
1160	1750	3450	4.00	4.00	1.00	7.4	8.9	9.9	10.9	11.9	12.9	14.4	15.4	15.9	17.4	18.9	20.9	22.9	24.4	26.9	28.4	29.9
						0.8	0.8	0.9	0.9	0.9	0.9	0.9	0.9	0.9	0.9	0.9	1.0	1.0	1.0	1.0	1.0	1.0
1160	1750	3450	4.20	4.20	1.00	7.1	8.6	9.6	10.6	11.6	12.6	14.1	15.1	15.6	17.1	18.6	20.6	22.6	24.1	26.6	28.1	29.6
						0.8	0.8	0.9	0.9	0.9	0.9	0.9	0.9	0.9	0.9	0.9	1.0	1.0	1.0	1.0	1.0	1.0
1160	1750	3450	4.60	4.60	1.00	6.4	7.9	8.9	9.9	10.9	11.9	13.4	14.4	14.9	16.4	17.9	19.9	21.9	23.4	25.9	27.4	28.9
						0.8	0.8	0.9	0.9	0.9	0.9	0.9	0.9	0.9	0.9	0.9	1.0	1.0	1.0	1.0	1.0	1.0
1160	1750	3450	5.00	5.00	1.00	—	7.3	8.3	9.3	10.3	11.3	12.8	13.8	14.3	15.8	17.3	19.3	21.3	22.8	25.3	26.8	28.3
						—	0.8	0.9	0.9	0.9	0.9	0.9	0.9	0.9	0.9	0.9	1.0	1.0	1.0	1.0	1.0	1.0
1160	1750	3450	5.20	5.20	1.00	—	7.0	8.0	9.0	10.0	11.0	12.5	13.5	14.0	15.5	17.0	19.0	21.0	22.5	25.0	26.5	28.0
						—	0.8	0.9	0.9	0.9	0.9	0.9	0.9	0.9	0.9	0.9	1.0	1.0	1.0	1.0	1.0	1.0
1160	1750	3450	5.60	5.60	1.00	—	—	7.4	8.4	9.4	10.4	11.9	12.9	13.4	14.9	16.4	18.4	20.4	21.9	24.4	25.9	27.4
						—	—	0.9	0.9	0.9	0.9	0.9	0.9	0.9	0.9	0.9	1.0	1.0	1.0	1.0	1.0	1.0
1160	1750	3450	6.00	6.00	1.00	—	—	—	7.7	8.7	9.7	11.2	12.2	12.7	14.2	15.7	17.7	19.7	21.2	23.7	25.2	26.7
						—	—	—	0.9	0.9	0.9	0.9	0.9	0.9	0.9	0.9	1.0	1.0	1.0	1.0	1.0	1.0
1160	1750	3450	6.40	6.40	1.00	—	—	—	—	8.1	9.1	10.6	11.6	12.1	13.6	15.1	17.1	19.1	20.6	23.1	24.6	26.1
						—	—	—	—	0.9	0.9	0.9	0.9	0.9	0.9	0.9	1.0	1.0	1.0	1.0	1.0	1.0
1160	1750	3450	7.00	7.00	1.00	—	—	—	—	—	—	9.7	10.7	11.2	12.7	14.2	16.2	18.2	19.7	22.2	23.7	25.2
						—	—	—	—	—	—	0.9	0.9	0.9	0.9	0.9	1.0	1.0	1.0	1.0	1.0	1.0
1117	1686	3323	5.00	5.20	1.04	—	7.1	8.1	9.1	10.1	11.1	12.6	13.6	14.1	15.6	17.1	19.1	21.1	22.6	25.1	26.6	28.1
						—	0.8	0.9	0.9	0.9	0.9	0.9	0.9	0.9	0.9	0.9	0.9	1.0	1.0	1.0	1.0	1.0
1108	1671	3295	4.00	4.20	1.05	7.2	8.7	9.7	10.7	11.7	12.7	14.2	15.2	15.7	17.2	18.7	20.7	22.7	24.2	26.7	28.2	29.7
						0.8	0.8	0.9	0.9	0.9	0.9	0.9	0.9	0.9	0.9	0.9	0.9	1.0	1.0	1.0	1.0	1.0
1100	1659	3271	3.40	3.60	1.05	8.2	9.7	10.7	11.7	12.7	13.7	15.2	16.2	16.7	18.2	19.7	21.7	23.7	25.2	27.7	29.2	30.7
						0.8	0.8	0.9	0.9	0.9	0.9	0.9	0.9	0.9	0.9	0.9	0.9	1.0	1.0	1.0	1.0	1.0
1096	1654	3261	3.20	3.40	1.06	8.5	10.0	11.0	12.0	13.0	14.0	15.5	16.5	17.0	18.5	20.0	22.0	24.0	25.5	28.0	29.5	31.0
						0.8	0.8	0.9	0.9	0.9	0.9	0.9	0.9	0.9	0.9	0.9	0.9	1.0	1.0	1.0	1.0	1.0
1093	1649	3250	3.00	3.20	1.06	8.8	10.3	11.3	12.3	13.3	14.3	15.8	16.8	17.3	18.8	20.3	22.3	24.3	25.8	28.3	29.8	31.3
						0.8	0.8	0.9	0.9	0.9	0.9	0.9	0.9	0.9	0.9	0.9	0.9	1.0	1.0	1.0	1.0	1.0
1090	1645	3242	6.00	6.40	1.06	—	—	—	—	8.4	9.4	10.9	11.9	12.4	13.9	15.4	17.4	19.4	20.9	23.4	24.9	26.4
						—	—	—	—	0.9	0.9	0.9	0.9	0.9	0.9	0.9	0.9	1.0	1.0	1.0	1.0	1.0
1086	1638	3229	5.60	6.00	1.07	—	—	—	8.0	9.0	10.0	11.5	12.5	13.0	14.5	16.0	18.0	20.0	21.5	24.0	25.5	27.0
						—	—	—	0.9	0.9	0.9	0.9	0.9	0.9	0.9	0.9	0.9	1.0	1.0	1.0	1.0	1.0
1081	1630	3214	5.20	5.60	1.07	—	—	7.7	8.7	9.7	10.7	12.2	13.2	13.7	15.2	16.7	18.7	20.7	22.2	24.7	26.2	27.7
						—	—	0.9	0.9	0.9	0.9	0.9	0.9	0.9	0.9	0.9	0.9	1.0	1.0	1.0	1.0	1.0
1072	1617	3187	4.60	5.00	1.08	—	7.6	8.6	9.6	10.6	11.6	13.1	14.1	14.6	16.1	17.6	19.6	21.6	23.1	25.6	27.1	28.6
						—	0.8	0.9	0.9	0.9	0.9	0.9	0.9	0.9	0.9	0.9	0.9	1.0	1.0	1.0	1.0	1.0
1064	1606	3165	4.20	4.60	1.09	6.7	8.2	9.2	10.2	11.2	12.2	13.7	14.7	15.2	16.7	18.2	20.2	22.2	23.7	26.2	27.7	29.2
						0.8	0.8	0.9	0.9	0.9	0.9	0.9	0.9	0.9	0.9	0.9	0.9	1.0	1.0	1.0	1.0	1.0
1064	1605	3164	6.40	7.00	1.09	—	—	—	—	—	8.6	10.1	11.1	11.6	13.1	14.6	16.6	18.6	20.1	22.6	24.1	25.6
						—	—	—	—	—	0.9	0.9	0.9	0.9	0.9	0.9	0.9	1.0	1.0	1.0	1.0	1.0
1051	1585	3125	3.60	4.00	1.10	7.7	9.2	10.2	11.2	12.2	13.2	14.7	15.7	16.2	17.7	19.2	21.2	23.2	24.7	27.2	28.7	30.2
						0.8	0.8	0.9	0.9	0.9	0.9	0.9	0.9	0.9	0.9	0.9	0.9	1.0	1.0	1.0	1.0	1.0
1041	1571	3096	5.00	5.60	1.11	—	6.8	7.8	8.8	9.8	10.8	12.3	13.3	13.8	15.3	16.8	18.8	20.8	22.3	24.8	26.3	27.8
						—	0.8	0.9	0.9	0.9	0.9	0.9	0.9	0.9	0.9	0.9	0.9	1.0	1.0	1.0	1.0	1.0
1039	1568	3092	3.20	3.60	1.12	8.3	9.8	10.8	11.8	12.8	13.8	15.3	16.3	16.8	18.3	19.8	21.8	23.8	25.3	27.8	29.3	30.8
						0.8	0.8	0.9	0.9	0.9	0.9	0.9	0.9	0.9	0.9	0.9	0.9	1.0	1.0	1.0	1.0	1.0
1033	1558	3072	3.00	3.40	1.12	8.6	10.1	11.1	12.1	13.1	14.1	15.6	16.6	17.1	18.6	20.1	22.1	24.1	25.6	28.1	29.6	31.1
						0.8	0.8	0.9	0.9	0.9	0.9	0.9	0.9	0.9	0.9	0.9	0.9	1.0	1.0	1.0	1.0	1.0
1032	1557	3070	4.60	5.20	1.12	—	7.4	8.4	9.4	10.4	11.4	12.9	13.9	14.4	16.0	17.5	19.5	21.5	23.0	25.5	27.0	28.5
						—	0.8	0.9	0.9	0.9	0.9	0.9	0.9	0.9	0.9	0.9	0.9	1.0	1.0	1.0	1.0	1.0

⚠ **WARNING** ** = Sheave Rim Speed over 6,000 feet per minute - See Page 236

CLASSICAL SECTION PRE-ENGINEERED DRIVE SELECTION TABLES

A, AP, AK & AX PRE-ENGINEERED TABLES — RATIO 1.00 - 1.12

V-Belt Number and Center Distance (Other sizes may be available, see page 215)												Sheave Datum Diameters		Rated HP per Belt (Includes Added HP for Speed Ratio)								
														Super Blue Ribbon & Aramax AP & AK RPM of Small Sheave			Super II A RPM of Small Sheave			Gold Label Cog-Belt AX RPM of Small Sheave		
A 75	A 81	A 85	A 90	A 96	A 100	A 105	A 112	A 120	A 128	A 136	A 144	Small Sheave	Large Sheave	1160 RPM	1750 RPM	3450 RPM	1160 RPM	1750 RPM	3450 RPM	1160 RPM	1750 RPM	3450 RPM
33.4	36.4	38.4	40.9	43.9	45.9	48.4	51.9	55.9	55.9	63.9	67.9	3.00	3.00	1.62	2.13	3.01	1.77	2.33	3.32	2.18	2.87	4.23
1.0	1.0	1.0	1.0	1.1	1.1	1.1	1.1	1.1	1.1	1.1	1.1											
33.1	36.1	38.1	40.6	43.6	45.6	48.1	51.6	55.6	59.6	63.6	67.6	3.20	3.20	1.87	2.50	3.81	2.02	2.68	3.91	2.41	3.20	4.77
1.0	1.0	1.0	1.0	1.1	1.1	1.1	1.1	1.1	1.1	1.1	1.1											
32.8	35.8	37.8	40.3	43.3	45.3	47.8	51.3	55.3	59.3	63.3	67.3	3.40	3.40	2.13	2.86	4.20	2.27	3.03	4.48	2.64	3.52	5.30
1.0	1.0	1.0	1.0	1.1	1.1	1.1	1.1	1.1	1.1	1.1	1.1											
32.5	35.5	37.5	40.0	43.0	45.0	47.5	51.0	55.0	59.0	63.0	67.0	3.60	3.60	2.38	3.21	4.77	2.52	3.38	5.04	2.87	3.83	5.82
1.0	1.0	1.0	1.0	1.1	1.1	1.1	1.1	1.1	1.1	1.1	1.1											
31.9	34.9	36.9	39.4	42.4	44.4	46.9	50.4	54.4	58.4	62.4	66.4	4.00	4.00	2.88	3.92	5.87	3.00	4.06	6.12	3.32	4.46	6.82
1.0	1.0	1.0	1.0	1.1	1.1	1.1	1.1	1.1	1.1	1.1	1.1											
31.6	34.6	36.6	39.1	42.1	44.1	46.8	50.1	54.1	58.1	62.1	66.1	4.20	4.20	3.13	4.26	6.40	3.24	4.40	6.63	3.55	4.77	7.31
1.0	1.0	1.0	1.0	1.1	1.1	1.1	1.1	1.1	1.1	1.1	1.1											
30.9	33.9	35.9	38.4	41.4	43.4	45.9	49.4	53.4	57.4	61.4	65.4	4.60	4.60	3.62	4.94	7.40	3.72	5.06	7.62	3.98	5.37	8.26
1.0	1.0	1.0	1.0	1.1	1.1	1.1	1.1	1.1	1.1	1.1	1.1											
30.3	33.3	35.3	37.8	40.8	42.8	45.3	48.8	52.8	56.8	60.8	64.8	5.00	5.00	4.10	5.61	8.34	4.19	5.71	8.55	4.42	5.96	9.17
1.0	1.0	1.0	1.0	1.1	1.1	1.1	1.1	1.1	1.1	1.1	1.1											
30.0	33.0	35.0	37.5	40.5	42.5	45.0	48.5	52.5	56.5	60.5	64.5	5.20	5.20	4.34	5.94	8.78	4.42	6.02	8.99	4.63	6.25	9.60
1.0	1.0	1.0	1.0	1.1	1.1	1.1	1.1	1.1	1.1	1.1	1.1											
29.4	32.4	34.4	36.9	39.9	41.9	44.4	47.9	51.9	55.9	59.9	63.9	5.60	5.60	4.81	6.59	9.60	4.88	6.65	9.83	5.05	6.83	10.45
1.0	1.0	1.0	1.0	1.1	1.1	1.1	1.1	1.1	1.1	1.1	1.1											
28.7	31.7	33.7	36.2	39.2	41.2	43.7	47.2	51.2	55.2	59.2	63.2	6.00	6.00	5.28	7.22	10.35	5.33	7.26	10.59	5.47	7.39	11.26
1.0	1.0	1.0	1.0	1.1	1.1	1.1	1.1	1.1	1.1	1.1	1.1											
28.1	31.1	33.1	35.6	38.6	40.6	43.1	46.6	50.6	54.6	58.6	62.6	6.40	6.40	5.74	7.84	11.01	5.78	7.86	11.29	5.87	7.94	12.03
1.0	1.0	1.0	1.0	1.1	1.1	1.1	1.1	1.1	1.1	1.1	1.1											
27.2	30.2	32.2	34.7	37.7	39.7	42.2	45.7	49.7	53.7	57.7	61.7	7.00	7.00	6.42	8.73	**	6.44	8.74	**	6.48	8.75	**
1.0	1.0	1.0	1.0	1.1	1.1	1.1	1.1	1.1	1.1	1.1	1.1											
30.1	33.1	35.1	37.6	40.6	42.6	45.1	48.6	52.6	56.6	60.6	64.6	5.00	5.20	4.15	5.69	8.48	4.24	5.78	8.70	4.47	6.04	9.31
1.0	1.0	1.0	1.0	1.1	1.1	1.1	1.1	1.1	1.1	1.1	1.1											
31.7	34.7	36.7	39.2	42.2	44.2	46.7	50.2	54.2	58.2	62.2	66.2	4.00	4.20	2.94	4.01	6.05	3.06	4.15	6.29	3.38	4.55	7.00
1.0	1.0	1.0	1.0	1.1	1.1	1.1	1.1	1.1	1.1	1.1	1.1											
32.7	35.7	37.7	40.2	43.2	45.2	47.7	51.2	55.2	59.2	63.2	67.2	3.40	3.60	2.20	2.96	4.40	2.34	3.14	4.69	2.71	3.62	5.50
1.0	1.0	1.0	1.0	1.1	1.1	1.1	1.1	1.1	1.1	1.1	1.1											
33.0	36.0	38.0	40.5	43.5	45.5	48.0	51.5	55.5	59.5	63.5	67.5	3.20	3.40	1.94	2.61	3.82	2.09	2.79	4.12	2.48	3.30	4.98
1.0	1.0	1.0	1.0	1.1	1.1	1.1	1.1	1.1	1.1	1.1	1.1											
33.3	36.3	38.3	40.8	43.8	45.8	48.3	51.8	55.8	59.8	63.8	67.8	3.00	3.20	1.69	2.25	3.23	1.85	2.45	3.55	2.25	2.98	4.45
1.0	1.0	1.0	1.0	1.1	1.1	1.1	1.1	1.1	1.1	1.1	1.1											
28.4	31.4	33.4	35.9	38.9	40.9	43.4	46.9	50.9	54.9	58.9	62.9	6.00	6.40	5.35	7.34	10.58	5.41	7.38	10.82	5.54	7.51	11.49
1.0	1.0	1.0	1.0	1.1	1.1	1.1	1.1	1.1	1.1	1.1	1.1											
29.0	32.0	34.0	36.5	39.5	41.5	44.0	47.5	51.5	55.5	59.5	63.5	5.60	6.00	4.89	6.71	9.85	4.96	6.78	10.07	5.13	6.95	10.70
1.0	1.0	1.0	1.0	1.1	1.1	1.1	1.1	1.1	1.1	1.1	1.1											
29.7	32.7	34.7	37.2	40.2	42.2	44.7	48.2	52.2	56.2	60.2	64.2	5.20	5.60	4.42	6.07	9.04	4.51	6.16	9.25	4.72	6.39	9.86
1.0	1.0	1.0	1.0	1.1	1.1	1.1	1.1	1.1	1.1	1.1	1.1											
30.6	33.6	35.6	38.1	41.1	43.1	45.6	49.1	53.1	57.1	51.1	65.1	4.60	5.00	3.71	5.09	7.69	3.81	5.20	7.91	4.08	5.52	8.54
1.0	1.0	1.0	1.0	1.1	1.1	1.1	1.1	1.1	1.1	1.1	1.1											
31.2	34.2	36.2	38.7	41.7	43.7	46.2	49.7	53.7	57.7	61.7	65.7	4.20	4.60	3.23	4.42	6.71	3.35	4.55	6.94	3.65	4.92	7.62
1.0	1.0	1.0	1.0	1.1	1.1	1.1	1.1	1.1	1.1	1.1	1.1											
27.6	30.6	32.6	35.1	38.1	40.1	42.6	46.1	50.1	54.1	58.1	62.1	6.40	7.00	5.84	7.99	11.32	5.88	8.02	11.60	5.98	8.10	12.33
1.0	1.0	1.0	1.0	1.1	1.1	1.1	1.1	1.1	1.1	1.1	1.1											
32.2	35.2	37.2	39.7	42.7	44.7	47.2	50.7	54.7	58.7	52.7	66.7	6.40	7.00	5.84	7.99	11.32	5.88	8.02	11.60	5.98	8.10	12.33
1.0	1.0	1.0	1.0	1.1	1.1	1.1	1.1	1.1	1.1	1.1	1.1											
29.8	32.8	34.8	37.3	40.3	42.3	44.8	44.8	52.3	56.3	60.3	64.3	5.00	5.60	4.22	5.80	8.71	4.31	5.89	8.92	4.54	6.15	9.53
1.0	1.0	1.0	1.0	1.1	1.1	1.1	1.1	1.1	1.1	1.1	1.1											
32.8	35.8	37.8	40.3	43.3	45.3	47.38	51.3	55.3	59.3	63.3	67.3	3.20	3.60	2.00	2.69	3.98	2.15	2.87	4.28	2.54	3.38	5.14
1.0	1.0	1.0	1.0	1.1	1.1	1.1	1.1	1.1	1.1	1.1	1.1											
33.1	36.1	38.1	40.6	43.6	45.6	48.1	51.6	55.6	59.6	63.6	67.6	3.00	3.40	1.75	2.33	3.40	1.90	2.53	3.71	2.31	3.07	4.62
1.0	1.0	1.0	1.0	1.1	1.1	1.1	1.1	1.1	1.1	1.1	1.1											
30.5	33.5	35.5	38.0	41.0	43.0	45.5	49.0	53.0	57.0	61.0	65.0	4.60	5.20	3.75	5.14	7.79	3.85	5.26	8.01	4.12	5.57	8.65
1.0	1.0	1.0	1.0	1.1	1.1	1.1	1.1	1.1	1.1	1.1	1.1											

⚠ **WARNING** * = Sheave Rim Speed over 6,000 feet per minute - See Page 236

CLASSICAL SECTION PRE-ENGINEERED DRIVE SELECTION TABLES

A, AP, AK & AX PRE-ENGINEERED TABLES RATIO 1.14 - 1.33

Driven Speed for Motor Speed of			Sheave Datum Diameters		V-Belt Number and Center Distance (other sizes may be available, see page 215)																	
1160 RPM	1750 RPM	3450 RPM	Small Sheave	Large Sheave	Speed Ratio	A 26	A 29	A 31	A 33	A 35	A 37	A 40	A 42	A 43	A 46	A 49	A 53	A 57	A 60	A 65	A 68	A 71
1020	1539	3035	5.60	6.40	1.14	—	—	—	7.7	8.7	9.7	11.2	12.2	12.7	14.2	15.7	17.7	19.7	21.2	23.7	25.2	26.7
						—	—	—	0.9	0.9	0.9	0.9	0.9	0.9	0.9	0.9	0.9	1.0	1.0	1.0	1.0	1.0
1016	1534	3023	4.00	4.60	1.14	6.9	8.4	9.4	10.4	11.4	12.4	13.9	14.9	15.4	16.9	18.4	20.4	22.4	23.9	26.4	27.9	29.4
						0.8	0.8	0.8	0.9	0.9	0.9	0.9	0.9	0.9	0.9	0.9	0.9	1.0	1.0	1.0	1.0	1.0
1012	1526	3008	5.20	6.00	1.15	—	—	7.3	8.3	9.3	10.3	11.8	12.8	13.3	14.8	16.3	18.3	20.3	21.8	24.4	25.9	27.4
						—	—	0.8	0.9	0.9	0.9	0.9	0.9	0.9	0.9	0.9	0.9	1.0	1.0	1.0	1.0	1.0
1004	1514	2985	3.60	4.20	1.16	7.5	9.0	10.0	11.0	12.0	13.0	14.5	15.5	16.0	17.5	19.0	21.0	23.0	24.5	27.0	28.5	30.0
						0.8	0.8	0.8	0.9	0.9	0.9	0.9	0.9	0.9	0.9	0.9	0.9	1.0	1.0	1.0	1.0	1.0
100	1509	2974	6.00	7.00	1.16	—	—	—	—	—	8.9	10.4	11.4	11.9	13.4	14.9	16.9	18.9	20.4	22.9	24.4	25.9
						—	—	—	—	—	0.9	0.9	0.9	0.9	0.9	0.9	0.9	1.0	1.0	1.0	1.0	1.0
996	1503	2963	3.40	4.00	1.16	7.8	9.3	10.3	11.3	12.3	13.3	14.8	15.8	16.3	17.8	19.3	21.3	23.3	24.8	27.3	28.8	30.3
						0.8	0.8	0.8	0.9	0.9	0.9	0.9	0.9	0.9	0.9	0.9	0.9	1.0	1.0	1.0	1.0	1.0
995	1501	2960	7.00	8.20	1.17	—	—	—	—	—	—	—	9.7	10.2	11.7	13.2	15.2	17.2	18.7	21.2	22.7	24.2
						—	—	—	—	—	—	—	0.9	0.9	0.9	0.9	0.9	1.0	1.0	1.0	1.0	1.0
983	1483	2924	4.20	5.00	1.18	6.4	7.9	8.9	9.9	10.9	11.9	13.4	14.4	14.9	16.4	17.9	19.9	21.9	23.4	25.9	27.4	28.9
						0.8	0.8	0.8	0.9	0.9	0.9	0.9	0.9	0.9	0.9	0.9	0.9	1.0	1.0	1.0	1.0	1.0
979	1477	2912	3.00	3.60	1.18	8.5	10.0	11.0	12.0	13.0	14.0	15.5	16.5	17.0	18.5	20.0	22.0	24.0	25.5	28.0	29.5	31.0
						0.8	0.8	0.8	0.9	0.9	0.9	0.9	0.9	0.9	0.9	0.9	0.9	1.0	1.0	1.0	1.0	1.0
974	1470	2898	5.00	6.00	1.19	—	—	7.5	8.5	9.5	10.5	12.0	13.0	13.5	15.0	16.5	18.5	20.5	22.0	24.5	26.0	27.5
						—	—	0.8	0.9	0.9	0.9	0.9	0.9	0.9	0.9	0.9	0.9	1.0	1.0	1.0	1.0	1.0
962	1451	2860	4.60	5.60	1.21	—	7.1	8.1	9.1	10.1	11.1	12.6	13.6	14.1	15.6	17.1	19.1	21.1	22.6	25.1	26.6	28.1
						—	0.8	0.8	0.9	0.9	0.9	0.9	0.9	0.9	0.9	0.9	0.9	1.0	1.0	1.0	1.0	1.0
951	1435	2830	3.40	4.20	1.22	7.7	9.2	10.2	11.2	12.2	13.2	14.7	15.7	16.2	17.7	19.2	21.2	23.2	24.7	27.2	28.7	30.2
						0.8	0.8	0.8	0.9	0.9	0.9	0.9	0.9	0.9	0.9	0.9	0.9	1.0	1.0	1.0	1.0	1.0
951	1434	2827	5.20	6.40	.122	—	—	—	8.0	9.0	10.0	11.5	12.5	13.0	14.5	16.0	18.0	20.0	21.5	24.0	25.5	27.0
						—	—	—	0.8	0.9	0.9	0.9	0.9	0.9	0.9	0.9	0.9	1.0	1.0	1.0	1.0	1.0
947	1429	2817	4.20	5.20	1.22	6.2	7.8	8.8	9.8	10.8	11.8	13.3	14.3	14.8	16.3	17.8	19.8	21.8	23.3	25.8	27.3	28.8
						0.8	0.8	0.8	0.9	0.9	0.9	0.9	0.9	0.9	0.9	0.9	0.9	1.0	1.0	1.0	1.0	1.0
942	1421	2801	3.20	4.00	1.23	8.0	9.5	10.5	11.5	12.5	13.5	15.0	16.0	16.5	18.0	19.5	21.5	23.5	25.0	27.5	29.0	30.5
						0.8	0.8	0.8	0.9	0.9	0.9	0.9	0.9	0.9	0.9	0.9	0.9	1.0	1.0	1.0	1.0	1.0
939	1417	2793	4.00	5.00	1.24	6.6	8.1	9.1	10.1	11.1	12.1	13.6	14.6	15.1	16.6	18.1	20.1	22.1	23.6	26.1	27.6	29.1
						0.8	0.8	0.8	0.9	0.9	0.9	0.9	0.9	0.9	0.9	0.9	0.9	1.0	1.0	1.0	1.0	1.0
936	1412	2784	5.60	7.00	1.24	—	—	—	—	8.2	9.2	10.7	11.7	12.2	13.7	15.2	17.2	19.2	20.7	23.2	24.7	26.2
						—	—	—	—	0.9	0.9	0.9	0.9	0.9	0.9	0.9	0.9	1.0	1.0	1.0	1.0	1.0
921	1389	2739	3.60	4.60	1.26	7.2	8.7	9.7	10.7	11.7	12.7	14.2	15.2	15.7	17.2	18.7	20.7	22.7	24.2	26.7	28.2	29.7
						0.8	0.8	0.8	0.9	0.9	0.9	0.9	0.9	0.9	0.9	0.9	0.9	1.0	1.0	1.0	1.0	1.0
916	1382	2724	5.00	6.40	1.27	—	—	—	8.2	9.2	10.2	11.7	12.7	13.2	14.7	16.2	18.2	20.2	21.7	24.2	25.7	27.2
						—	—	—	0.8	0.9	0.9	0.9	0.9	0.9	0.9	0.9	0.9	1.0	1.0	1.0	1.0	1.0
913	1377	2715	6.40	8.20	1.27	—	—	—	—	—	—	9.1	10.1	10.6	12.1	13.7	15.7	17.7	19.2	21.7	23.2	24.7
						—	—	—	—	—	—	0.9	0.9	0.9	0.9	0.9	0.9	1.0	1.0	1.0	1.0	1.0
909	1372	2704	7.00	9.00	1.28	—	—	—	—	—	—	—	—	9.5	11.0	12.5	14.5	16.6	18.1	20.6	22.1	23.6
						—	—	—	—	—	—	—	—	0.9	0.9	0.9	0.9	0.9	1.0	1.0	1.0	1.0
905	1365	2690	4.00	5.20	1.28	6.4	7.9	8.9	9.9	10.9	11.9	13.4	14.4	14.9	16.4	17.9	19.9	21.9	23.4	25.9	27.4	28.9
						0.8	0.8	0.8	0.9	0.9	0.9	0.9	0.9	0.9	0.9	0.9	0.9	1.0	1.0	1.0	1.0	1.0
900	1358	2677	4.60	6.00	1.29	—	—	7.8	8.8	9.8	10.8	12.3	13.3	13.8	15.3	16.8	18.8	20.8	22.3	24.8	26.3	27.8
						—	—	0.8	0.8	0.9	0.9	0.9	0.9	0.9	0.9	0.9	0.9	1.0	1.0	1.0	1.0	1.0
899	1357	2675	3.20	4.20	1.29	7.8	9.3	10.3	11.3	12.3	13.3	14.8	15.8	16.3	17.8	19.3	21.3	23.3	24.8	27.3	28.8	30.3
						0.8	0.8	0.8	0.9	0.9	0.9	0.9	0.9	0.9	0.9	0.9	0.9	1.0	1.0	1.0	1.0	1.0
887	1338	2638	3.00	4.00	1.31	8.1	9.6	10.6	11.6	12.6	13.6	15.1	16.1	16.6	18.1	19.6	21.6	23.6	25.1	27.6	29.1	30.6
						0.8	0.8	0.8	0.9	0.9	0.9	0.9	0.9	0.9	0.9	0.9	0.9	1.0	1.0	1.0	1.0	1.0
882	1331	2624	4.20	5.60	1.31	—	7.4	8.4	9.4	10.4	11.4	12.9	13.9	14.4	15.9	17.4	19.4	21.4	22.9	25.4	26.9	28.4
						—	0.8	0.8	0.8	0.9	0.9	0.9	0.9	0.9	0.9	0.9	0.9	1.0	1.0	1.0	1.0	1.0
873	1317	2596	3.40	4.60	1.33	7.3	8.8	9.8	10.9	11.9	12.9	14.4	15.4	15.9	17.4	18.9	20.9	22.9	24.4	26.9	28.4	29.9
						0.8	0.8	0.8	0.9	0.9	0.9	0.9	0.9	0.9	0.9	0.9	0.9	1.0	1.0	1.0	1.0	1.0
872	1316	2593	5.20	7.00	1.33	—	—	—	—	8.5	9.5	11.0	12.0	12.5	14.0	15.5	17.5	19.5	21.0	23.6	25.1	26.6
						—	—	—	—	0.9	0.9	0.9	0.9	0.9	0.9	0.9	0.9	1.0	1.0	1.0	1.0	1.0

⚠ **WARNING** ** = Sheave Rim Speed over 6,000 feet per minute - See Page 236

CLASSICAL SECTION PRE-ENGINEERED DRIVE SELECTION TABLES

A, AP, AK & AX PRE-ENGINEERED TABLES — RATIO 1.14 - 1.33

V-Belt Number and Center Distance (Other sizes may be available, see page 215)												Sheave Datum Diameters		Rated HP per Belt (Includes Added HP for Speed Ratio)								
														Super Blue Ribbon & Aramax AP & AK RPM of Small Sheave			Super II A RPM of Small Sheave			Gold Label Cog-Belt AX RPM of Small Sheave		
A 75	A 81	A 85	A 90	A 96	A 100	A 105	A 112	A 120	A 128	A 136	A 144	Small Sheave	Large Sheave	1160 RPM	1750 RPM	3450 RPM	1160 RPM	1750 RPM	3450 RPM	1160 RPM	1750 RPM	3450 RPM
28.7	31.7	33.7	36.2	39.2	41.2	43.7	47.2	51.2	55.2	59.2	63.2	5.60	6.40	4.95	6.80	10.02	5.02	6.86	10.25	5.19	7.04	10.87
1.0	1.0	1.0	1.0	1.1	1.1	1.1	1.1	1.1	1.1	1.1	1.1											
31.4	34.4	36.4	38.9	41.9	43.9	46.4	49.9	53.9	57.9	61.9	65.9	4.00	4.60	30.2	4.13	6.30	3.15	4.28	6.55	3.47	4.68	7.25
1.0	1.0	1.0	1.0	1.1	1.1	1.1	1.1	1.1	1.1	1.1	1.1											
29.4	32.4	34.4	36.9	39.9	41.9	44.4	47.9	51.9	55.9	59.9	63.9	5.20	6.00	4.48	6.16	9.22	4.57	6.25	9.43	4.78	6.48	10.05
1.0	1.0	1.0	1.0	1.1	1.1	1.1	1.1	1.1	1.1	1.1	1.1											
32.0	35.0	37.0	39.5	42.5	44.5	47.0	50.5	54.5	58.5	62.5	66.5	3.60	4.20	2.53	3.45	5.23	2.67	3.61	5.50	30.03	4.07	6.28
1.0	1.0	1.0	1.0	1.1	1.1	1.1	1.1	1.1	1.1	1.1	1.1											
27.9	30.9	32.9	35.4	38.4	40.4	42.9	46.4	50.4	54.4	58.4	62.4	6.00	7.00	5.43	7.46	10.82	5.49	7.50	11.06	5.62	7.63	11.73
1.0	1.0	1.0	1.0	1.1	1.1	1.1	1.1	1.1	1.1	1.1	1.1											
32.3	35.3	37.3	39.8	42.8	44.8	47.3	50.8	54.8	58.8	62.8	66.8	3.40	4.00	2.29	3.10	4.68	2.43	3.28	4.96	2.80	3.76	5.77
1.0	1.0	1.0	1.0	1.1	1.1	1.1	1.1	1.1	1.1	1.1	1.1											
26.2	29.2	31.2	33.7	36.7	38.7	41.2	44.7	48.7	52.7	56.7	60.7	7.00	8.20	6.58	8.98	**	6.60	8.98	**	6.64	8.99	**
1.0	1.0	1.0	1.0	1.1	1.1	1.1	1.1	1.1	1.1	1.1	1.1											
30.9	33.9	35.9	38.4	41.4	43.4	45.9	49.4	53.4	57.4	61.4	65.4	4.20	5.00	3.30	4.52	6.90	3.41	4.65	7.14	3.71	5.02	7.82
1.0	1.0	1.0	1.0	1.1	1.1	1.1	1.1	1.1	1.1	1.1	1.1											
33.0	36.0	38.0	40.5	43.5	45.5	48.0	51.5	55.5	59.5	63.5	67.5	3.00	3.60	1.79	2.39	3.52	1.94	2.59	3.84	2.35	3.13	4.74
1.0	1.0	1.0	1.0	1.1	1.1	1.1	1.1	1.1	1.1	1.1	1.1											
29.5	32.5	34.5	37.0	40.0	42.0	44.5	48.0	52.0	56.0	60.0	64.0	5.00	6.00	4.27	5.88	8.86	4.36	5.97	9.07	4.59	6.23	9.69
1.0	1.0	1.0	1.0	1.1	1.1	1.1	1.1	1.1	1.1	1.1	1.1											
30.1	33.1	35.1	37.6	40.6	42.6	45.1	48.6	52.6	56.6	60.6	64.6	4.60	5.60	3.80	5.22	7.95	3.90	5.34	8.17	4.17	5.65	8.81
1.0	1.0	1.0	1.0	1.1	1.1	1.1	1.1	1.1	1.1	1.1	1.1											
32.2	35.2	37.2	39.7	42.7	44.7	47.2	50.7	54.7	58.7	62.7	66.7	3.40	4.20	2.32	3.15	4.77	2.46	3.32	5.05	2.83	3.80	5.86
1.0	1.0	1.0	1.0	1.1	1.1	1.1	1.1	1.1	1.1	1.1	1.1											
29.0	32.0	34.0	36.5	39.5	41.5	44.0	47.5	51.5	55.5	59.5	63.3	5.20	6.40	4.53	6.23	9.35	4.61	6.31	9.56	4.82	6.54	10.17
1.0	1.0	1.0	1.0	1.1	1.1	1.1	1.1	1.1	1.1	1.1	1.1											
30.8	33.8	35.8	38.3	41.3	43.3	45.8	49.3	53.3	57.3	61.3	65.3	4.20	5.20	3.32	4.55	6.97	3.44	4.69	7.21	3.74	5.06	7.89
1.0	1.0	1.0	1.0	1.1	1.1	1.1	1.1	1.1	1.1	1.1	1.1											
32.5	35.5	37.5	40.0	43.0	45.0	47.5	51.0	55.0	59.0	63.0	67.0	3.20	4.00	2.07	2.79	4.20	2.22	2.98	4.49	2.61	3.49	5.35
1.0	1.0	1.0	1.0	1.1	1.1	1.1	1.1	1.1	1.1	1.1	1.1											
31.1	34.1	36.1	38.6	41.6	43.6	46.1	49.6	53.6	57.6	61.6	65.6	4.00	5.00	3.08	4.22	6.46	3.20	4.36	6.71	3.52	4.76	7.41
1.0	1.0	1.0	1.0	1.1	1.1	1.1	1.1	1.1	1.1	1.1	1.1											
28.2	31.2	33.2	35.7	38.7	40.7	43.2	46.7	50.7	54.7	58.7	62.8	5.60	7.00	5.01	6.89	10.20	5.08	6.95	10.42	5.25	7.13	11.05
1.0	1.0	1.0	1.0	1.1	1.1	1.1	1.1	1.1	1.1	1.1	1.1											
31.7	34.7	36.7	39.2	42.2	44.2	46.7	50.2	54.2	58.2	62.2	66.2	3.60	4.60	2.59	3.53	5.39	2.72	3.70	5.66	3.08	4.15	6.44
1.0	1.0	1.0	1.0	1.1	1.1	1.1	1.1	1.1	1.1	1.1	1.1											
29.2	32.2	34.2	36.7	39.7	41.7	44.2	47.7	51.7	55.7	59.7	63.7	5.00	6.40	4.31	5.93	8.97	4.40	6.02	9.18	4.63	6.28	9.79
1.0	1.0	1.0	1.0	1.1	1.1	1.1	1.1	1.1	1.1	1.1	1.1											
26.7	29.7	31.7	34.2	37.2	39.2	41.7	45.2	49.2	53.2	57.2	61.2	6.40	8.20	5.95	8.16	11.65	5.99	8.18	11.92	6.09	8.26	12.66
1.0	1.0	1.0	1.0	1.1	1.1	1.1	1.1	1.1	1.1	1.1	1.1											
25.6	28.6	30.6	33.1	36.1	38.1	40.6	44.1	48.1	52.1	56.1	60.1	7.00	9.00	6.63	9.06	**	6.65	9.06	**	6.69	9.07	**
1.0	1.0	1.0	1.0	1.1	1.1	1.1	1.1	1.1	1.1	1.1	1.1											
30.9	33.9	35.9	38.4	41.4	43.4	45.9	49.4	53.4	57.4	61.4	65.4	4.00	5.20	3.10	4.24	6.52	3.22	4.39	6.76	3.54	4.79	7.47
1.0	1.0	1.0	1.0	1.1	1.1	1.1	1.1	1.1	1.1	1.1	1.1											
29.8	32.8	34.8	37.3	40.3	42.3	44.8	48.3	62.3	56.3	60.3	64.3	4.60	6.00	3.83	5.28	8.06	3.94	5.39	8.28	4.20	5.70	8.91
1.0	1.0	1.0	1.0	1.1	1.1	1.1	1.1	1.1	1.1	1.1	1.1											
32.3	35.3	37.3	39.8	42.8	44.8	47.3	50.8	54.8	58.8	62.8	66.8	3.20	4.20	2.09	2.83	4.27	2.24	3.02	4.56	2.63	3.53	5.42
1.0	1.0	1.0	1.0	1.1	1.1	1.1	1.1	1.1	1.1	1.1	1.1											
32.6	35.6	37.6	40.1	43.1	45.1	47.6	51.1	55.1	59.2	63.2	67.2	3.00	4.00	1.84	2.47	3.68	2.00	2.67	4.00	2.40	3.21	4.90
1.0	1.0	1.0	1.0	1.1	1.1	1.1	1.1	1.1	1.1	1.1	1.1											
30.4	33.4	35.4	37.9	40.9	42.9	45.4	48.9	52.9	56.9	60.9	64.9	4.20	5.60	3.35	4.61	7.08	3.47	4.74	7.31	3.77	5.11	7.99
1.0	1.0	1.0	1.0	1.1	1.1	1.1	1.1	1.1	1.1	1.1	1.1											
31.9	34.9	36.9	39.4	42.4	44.4	46.9	50.4	54.4	58.4	62.4	66.4	3.40	4.60	2.36	3.21	4.89	2.50	3.39	5.17	2.88	3.87	5.99
1.0	1.0	1.0	1.0	1.1	1.1	1.1	1.1	1.1	1.1	1.1	1.1											
28.6	31.6	33.6	36.1	39.1	41.1	43.6	47.1	51.1	55.1	59.1	63.1	5.20	7.00	4.57	6.29	9.47	4.65	6.38	9.69	4.86	6.61	10.30
1.0	1.0	1.0	1.0	1.1	1.1	1.1	1.1	1.1	1.1	1.1	1.1											

⚠ **WARNING** ** = Sheave Rim Speed over 6,000 feet per minute - See Page 236

CLASSICAL SECTION PRE-ENGINEERED DRIVE SELECTION TABLES

A, AP, AK & AX PRE-ENGINEERED TABLES RATIO 1.35 - 1.62

Driven Speed for Motor Speed of			Sheave Datum Diameters		V-Belt Number and Center Distance (other sizes may be available, see page 215)																	
1160 RPM	1750 RPM	3450 RPM	Small Sheave	Large Sheave	Speed Ratio	A 26	A 29	A 31	A 33	A 35	A 37	A 40	A 42	A 43	A 46	A 49	A 53	A 57	A 60	A 65	A 68	A 71
858	1294	2552	6.00	8.20	1.35	—	—	—	—	—	—	9.4	10.4	10.9	12.4	14.0	16.0	18.0	19.5	22.0	23.5	25.0
						—	—	—	—	—	—	0.9	0.9	0.9	0.9	0.9	0.9	0.9	1.0	1.0	1.0	1.0
851	1283	2530	3.60	5.00	1.36	6.9	8.4	9.4	10.4	11.4	12.4	13.9	14.9	15.4	16.9	18.4	20.4	22.4	23.9	26.4	27.9	29.4
						0.8	0.8	0.8	0.9	0.9	0.9	0.9	0.9	0.9	0.9	0.9	0.9	1.0	1.0	1.0	1.0	1.0
847	1278	2520	3.00	4.20	1.37	8.0	9.5	10.5	11.5	12.5	13.5	15.0	16.0	16.5	18.0	19.5	21.5	23.5	25.0	27.5	29.0	30.5
						0.8	0.8	0.8	0.9	0.9	0.9	0.9	0.9	0.9	0.9	0.9	0.9	1.0	1.0	1.0	1.0	1.0
846	1276	2516	4.60	6.40	1.37	—	—	7.5	8.5	9.5	10.5	12.0	13.0	13.5	15.0	16.5	18.5	20.5	22.0	24.5	26.0	27.5
						—	—	0.8	0.8	0.9	0.9	0.9	0.9	0.9	0.9	0.9	0.9	1.0	1.0	1.0	1.0	1.0
843	1271	2506	4.00	5.60	1.38	—	7.6	8.6	9.6	10.6	11.6	13.1	14.1	14.6	16.1	17.6	19.6	21.6	23.1	25.6	27.1	28.6
						—	0.8	0.8	0.8	0.9	0.9	0.9	0.9	0.9	0.9	0.9	0.9	1.0	1.0	1.0	1.0	1.0
840	1267	2498	5.00	7.00	1.38	—	—	—	7.7	8.7	9.7	11.2	12.2	12.7	14.2	15.7	17.7	19.7	21.2	23.7	25.2	26.7
						—	—	—	0.8	0.8	0.9	0.9	0.9	0.9	0.9	0.9	0.9	1.0	1.0	1.0	1.0	1.0
834	1258	2480	6.40	9.00	1.39	—	—	—	—	—	—	—	9.5	10.0	11.5	13.0	15.0	17.0	18.5	21.0	22.5	24.0
						—	—	—	—	—	—	—	0.9	0.9	0.9	0.9	0.9	0.9	1.0	1.0	1.0	1.0
826	1246	2456	4.20	6.00	1.40	-0.0	7.1	8.1	9.1	10.1	11.1	12.6	13.6	14.1	15.6	17.1	19.1	21.1	22.6	25.1	26.6	28.1
						-0.0	0.8	0.8	0.8	0.9	0.9	0.9	0.9	0.9	0.9	0.9	0.9	1.0	1.0	1.0	1.0	1.0
825	1245	2454	3.20	4.60	1.41	7.5	9.0	10.0	11.0	12.0	13.0	14.5	15.5	16.0	17.5	19.0	21.0	23.0	24.5	27.0	28.5	30.0
						0.8	0.8	0.8	0.9	0.9	0.9	0.9	0.9	0.9	0.9	0.9	0.9	1.0	1.0	1.0	1.0	1.0
819	1236	2437	3.60	5.20	1.42	6.7	8.2	9.2	10.2	11.2	12.2	13.7	14.7	15.2	16.7	18.2	20.2	22.2	23.7	26.2	27.7	29.2
						0.8	0.8	0.8	0.8	0.9	0.9	0.9	0.9	0.9	0.9	0.9	0.9	1.0	1.0	1.0	1.0	1.0
806	1217	2399	3.40	5.00	1.44	7.0	8.5	9.5	10.5	11.5	12.5	14.0	15.0	15.5	17.0	18.5	20.5	22.5	24.0	26.5	28.0	29.5
						0.8	0.8	0.8	0.8	0.9	0.9	0.9	0.9	0.9	0.9	0.9	0.9	1.0	1.0	1.0	1.0	1.0
803	1212	2388	5.60	8.20	1.44	—	—	—	—	—	—	9.7	10.7	11.2	12.7	14.3	16.3	18.3	19.8	22.3	23.8	25.3
						—	—	—	—	—	—	0.9	0.9	0.9	0.9	0.9	0.9	0.9	1.0	1.0	1.0	1.0
789	1190	2346	4.00	6.00	1.47	—	7.2	8.2	9.2	10.2	11.3	12.8	13.8	14.3	15.8	17.3	19.3	21.3	22.8	25.3	26.8	28.3
						—	0.8	0.8	0.8	0.9	0.9	0.9	0.9	0.9	0.9	0.9	0.9	1.0	1.0	1.0	1.0	1.0
784	1182	2331	6.00	9.00	1.48	—	—	—	—	—	—	—	9.8	10.3	11.8	13.3	15.3	17.3	18.8	21.3	22.8	24.3
						—	—	—	—	—	—	—	0.9	0.9	0.9	0.9	0.9	1.0	1.0	1.0	1.0	1.0
777	1173	2312	3.00	4.60	1.49	7.6	9.1	10.1	11.2	12.2	13.2	14.7	15.7	16.2	17.7	19.2	21.2	23.2	24.7	27.2	28.7	30.2
						0.8	0.8	0.8	0.8	0.9	0.9	0.9	0.9	0.9	0.9	0.9	0.9	1.0	1.0	1.0	1.0	1.0
777	1172	2311	3.40	5.20	1.49	6.8	8.3	9.4	10.4	11.4	12.4	13.9	14.9	15.4	16.9	18.4	20.4	22.4	23.9	26.4	27.9	29.4
						0.8	0.8	0.8	0.8	0.9	0.9	0.9	0.9	0.9	0.9	0.9	0.9	1.0	1.0	1.0	1.0	1.0
776	1171	2309	4.20	6.40	1.49	—	—	7.7	8.8	9.8	10.8	12.3	13.3	13.8	15.3	16.8	18.8	20.8	22.3	24.8	26.3	27.8
						—	—	0.8	0.8	0.9	0.9	0.9	0.9	0.9	0.9	0.9	0.9	1.0	1.0	1.0	1.0	1.0
776	1171	2308	4.60	7.00	1.49	—	—	—	7.9	9.0	10.0	11.5	12.5	13.0	14.5	16.0	18.0	20.0	21.5	24.0	25.5	27.0
						—	—	—	0.8	0.8	0.9	0.9	0.9	0.9	0.9	0.9	0.9	0.9	1.0	1.0	1.0	1.0
775	1169	2305	7.00	10.60	1.50	—	—	—	—	—	—	—	—	—	—	11.2	13.2	15.2	16.7	19.2	20.7	22.3
						—	—	—	—	—	—	—	—	—	—	0.9	0.9	0.9	0.9	1.0	1.0	1.0
763	1152	2271	3.60	5.60	1.52	6.3	7.9	8.9	9.9	10.9	11.9	13.4	14.4	14.9	16.4	17.9	19.9	21.9	23.4	25.9	27.4	28.9
						0.8	0.8	0.8	0.8	0.9	0.9	0.9	0.9	0.9	0.9	0.9	0.9	1.0	1.0	1.0	1.0	1.0
762	1150	2267	3.20	5.00	1.52	7.2	8.7	9.7	10.7	11.7	12.7	14.2	15.2	15.7	17.2	18.7	20.7	22.7	24.2	26.7	28.2	29.7
						0.8	0.8	0.8	0.8	0.9	0.9	0.9	0.9	0.9	0.9	0.9	0.9	1.0	1.0	1.0	1.0	1.0
748	1129	2225	5.20	8.20	1.55	—	—	—	—	—	8.5	10.0	11.0	11.5	13.0	14.5	16.6	18.6	20.1	22.6	24.1	25.6
						—	—	—	—	—	0.8	0.9	0.9	0.9	0.9	0.9	0.9	0.9	1.0	1.0	1.0	1.0
741	1118	2205	4.00	6.40	1.56	—	6.9	7.9	8.9	9.9	10.9	12.4	13.4	13.9	15.4	16.9	18.9	20.9	22.4	25.0	26.5	28.0
						—	0.8	0.8	0.8	0.8	0.9	0.9	0.9	0.9	0.9	0.9	0.9	0.9	1.0	1.0	1.0	1.0
734	1108	2184	3.20	5.20	1.58	7.0	8.5	9.5	10.5	11.5	12.5	14.0	15.0	15.5	17.0	18.5	20.5	22.5	24.0	26.5	28.0	29.5
						0.8	0.8	0.8	0.8	0.9	0.9	0.9	0.9	0.9	0.9	0.9	0.9	1.0	1.0	1.0	1.0	1.0
734	1107	2182	5.60	9.00	1.58	—	—	—	—	—	—	9.0	10.0	10.5	12.1	13.6	15.6	17.6	19.1	21.6	23.1	24.6
						—	—	—	—	—	—	0.9	0.9	0.9	0.9	0.9	0.9	0.9	0.9	1.0	1.0	1.0
724	1092	2153	3.40	5.60	1.60	6.5	8.0	9.0	10.0	11.0	12.0	13.5	14.5	15.0	16.5	18.0	20.1	22.1	23.6	26.1	27.6	29.1
						0.8	0.8	0.8	0.8	0.9	0.9	0.9	0.9	0.9	0.9	0.9	0.9	1.0	1.0	1.0	1.0	1.0
721	1087	2143	5.00	8.20	1.61	—	—	—	—	—	8.6	10.2	11.2	11.7	13.2	14.7	16.7	18.7	20.2	22.7	24.2	25.7
						—	—	—	—	—	0.8	0.9	0.9	0.9	0.9	0.9	0.9	0.9	1.0	1.0	1.0	1.0
718	1083	2136	3.00	5.00	1.62	7.3	8.8	9.8	10.8	11.8	12.8	14.3	15.3	15.8	17.3	18.8	20.8	22.8	24.3	26.8	28.3	29.9
						0.8	0.8	0.8	0.8	0.9	0.9	0.9	0.9	0.9	0.9	0.9	0.9	1.0	1.0	1.0	1.0	1.0
715	1078	2125	3.60	6.00	1.62	—	7.5	8.5	9.5	10.5	11.5	13.1	14.1	14.6	16.1	17.6	19.6	21.6	23.1	25.6	27.1	28.6
						—	0.8	0.8	0.8	0.9	0.9	0.9	0.9	0.9	0.9	0.9	0.9	0.9	1.0	1.0	1.0	1.0

⚠ **WARNING** ** = Sheave Rim Speed over 6,000 feet per minute - See Page 236

CLASSICAL SECTION PRE-ENGINEERED DRIVE SELECTION TABLES

A, AP, AK & AX PRE-ENGINEERED TABLES — RATIO 1.35 - 1.62

V-Belt Number and Center Distance (Other sizes may be available, see page 215)												Sheave Datum Diameters		Rated HP per Belt (Includes Added HP for Speed Ratio)								
														Super Blue Ribbon & Aramax AP & AK RPM of Small Sheave			Super II A RPM of Small Sheave			Gold Label Cog-Belt AX RPM of Small Sheave		
A 75	A 81	A 85	A 90	A 96	A 100	A 105	A 112	A 120	A 128	A 136	A 144	Small Sheave	Large Sheave	1160 RPM	1750 RPM	3450 RPM	1160 RPM	1750 RPM	3450 RPM	1160 RPM	1750 RPM	3450 RPM
27.0	30.0	32.0	34.5	37.5	39.5	42.0	45.5	49.5	53.5	57.5	61.5	6.00	8.20	5.52	7.58	11.06	5.57	7.62	11.30	5.70	7.75	11.97
1.0	1.0	1.0	1.0	1.0	1.1	1.1	1.1	1.1	1.1	1.1	1.1											
31.4	34.4	36.4	38.9	41.9	43.9	46.4	49.9	53.9	57.9	61.9	65.9	3.60	5.00	2.62	3.58	5.49	2.76	3.75	5.76	3.11	4.20	6.54
1.0	1.0	1.0	1.0	1.1	1.1	1.1	1.1	1.1	1.1	1.1	1.1											
32.5	35.5	37.5	40.0	43.0	45.0	47.5	51.0	55.0	59.0	63.0	67.0	3.00	4.20	1.86	2.50	3.73	2.01	2.70	4.05	2.42	3.24	4.95
1.0	1.0	1.0	1.0	1.1	1.1	1.1	1.1	1.1	1.1	1.1	1.1											
29.5	32.5	34.5	37.0	40.0	42.0	44.5	48.0	52.0	56.0	60.0	64.0	4.60	6.40	3.86	5.31	8.13	3.96	5.43	8.35	4.23	5.74	8.98
1.0	1.0	1.0	1.0	1.1	1.1	1.1	1.1	1.1	1.1	1.1	1.1											
30.8	33.6	35.6	38.1	41.1	43.1	45.6	49.1	53.1	57.1	61.1	65.1	4.00	5.60	3.12	4.29	6.60	3.25	4.43	6.85	3.57	4.83	7.55
1.0	1.0	1.0	1.0	1.1	1.1	1.1	1.1	1.1	1.1	1.1	1.1											
28.7	31.7	33.7	36.2	39.2	41.2	43.7	47.2	51.2	55.2	59.2	63.2	5.00	7.00	4.34	5.98	9.07	4.43	6.08	9.28	4.66	6.33	9.90
1.0	1.0	1.0	1.0	1.0	1.1	1.1	1.1	1.1	1.1	1.1	1.1											
26.0	29.0	31.0	33.5	36.5	38.5	41.0	44.5	48.5	52.5	56.5	60.5	6.40	9.00	5.99	8.21	11.75	6.03	8.24	12.03	6.12	8.32	12.77
1.0	1.0	1.0	1.0	1.0	1.1	1.1	1.1	1.1	1.1	1.1	1.1											
30.1	33.1	35.1	37.6	40.6	42.6	45.1	48.8	52.6	56.6	60.6	64.6	4.20	6.00	3.38	4.64	7.15	3.49	4.78	7.38	3.80	5.15	8.06
1.0	1.0	1.0	1.0	1.1	1.1	1.1	1.1	1.1	1.1	1.1	1.1											
32.0	35.0	37.0	39.5	42.5	44.5	47.0	50.5	54.5	58.5	62.5	66.5	3.20	4.60	2.12	2.88	4.36	2.27	3.07	4.66	2.66	3.58	5.52
1.0	1.0	1.0	1.0	1.1	1.1	1.1	1.1	1.1	1.1	1.1	1.1											
31.2	34.2	36.2	38.7	41.7	43.7	46.2	49.7	53.7	57.7	61.7	65.7	3.60	5.20	2.63	3.60	5.53	2.77	3.76	5.80	3.13	4.22	6.57
1.0	1.0	1.0	1.0	1.1	1.1	1.1	1.1	1.1	1.1	1.1	1.1											
31.5	34.5	36.5	39.0	42.0	44.0	46.5	50.0	54.0	58.0	62.0	66.0	3.40	5.00	2.39	3.25	4.97	2.53	3.43	5.25	2.90	3.91	6.07
1.0	1.0	1.0	1.0	1.1	1.1	1.1	1.1	1.1	1.1	1.1	1.1											
27.3	30.3	32.3	34.8	37.8	39.8	42.3	45.8	49.8	53.8	57.8	61.8	5.60	8.20	5.07	6.98	10.38	5.14	7.04	10.60	5.31	7.22	11.23
1.0	1.0	1.0	1.0	1.0	1.1	1.1	1.1	1.1	1.1	1.1	1.1											
30.3	33.3	35.3	37.8	40.8	42.8	45.3	48.8	52.8	56.8	60.8	64.8	4.00	6.00	3.14	4.32	6.66	3.27	4.46	6.90	3.59	4.86	7.61
1.0	1.0	1.0	1.0	1.1	1.1	1.1	1.1	1.1	1.1	1.1	1.1											
26.3	29.3	31.3	33.8	36.8	38.8	41.3	44.8	48.8	52.8	56.8	60.9	6.00	9.00	5.54	7.62	11.14	5.60	7.67	11.38	5.73	7.79	12.05
1.0	1.0	1.0	1.0	1.0	1.1	1.1	1.1	1.1	1.1	1.1	1.1											
32.2	35.2	37.2	39.7	42.7	44.7	47.2	50.7	54.7	58.7	62.7	66.7	3.00	4.60	1.88	2.54	3.81	2.04	2.74	4.12	2.45	3.27	5.03
1.0	1.0	1.0	1.0	1.1	1.1	1.1	1.1	1.1	1.1	1.1	1.1											
31.4	34.4	36.4	38.9	41.9	43.9	46.4	49.9	53.9	57.9	61.9	65.9	3.40	5.20	2.40	3.26	5.00	2.54	3.44	5.28	2.91	3.92	6.10
1.0	1.0	1.0	1.0	1.1	1.1	1.1	1.1	1.1	1.1	1.1	1.1											
29.8	32.8	34.8	37.3	40.3	42.3	44.8	48.3	52.3	56.3	60.3	64.3	4.20	6.40	3.39	4.67	7.20	3.51	4.80	7.43	3.81	5.17	8.11
1.0	1.0	1.0	1.0	1.0	1.1	1.1	1.1	1.1	1.1	1.1	1.1											
29.0	32.0	34.0	36.5	39.5	41.5	44.0	47.5	51.5	55.5	59.5	63.5	4.60	7.00	3.88	5.35	8.20	3.99	5.46	8.42	4.25	5.78	9.06
1.0	1.0	1.0	1.0	1.0	1.1	1.1	1.1	1.1	1.1	1.1	1.1											
24.3	27.3	29.3	31.8	34.8	36.8	39.3	42.8	46.=	50.8	54.8	58.8	7.00	10.60	6.68	9.14	**	6.71	9.14	**	6.75	9.15	**
1.0	1.0	1.0	1.0	1.0	1.1	1.1	1.1	1.1	1.1	1.1	1.1											
30.9	33.9	35.9	38.4	41.4	43.4	45.9	49.4	53.4	57.4	61.4	65.4	3.60	5.60	2.65	3.63	5.58	2.79	3.79	5.85	3.14	4.25	6.63
1.0	1.0	1.0	1.0	1.1	1.1	1.1	1.1	1.1	1.1	1.1	1.1											
31.7	34.7	36.7	39.2	42.2	44.2	46.7	50.2	54.2	58.2	62.2	66.2	3.20	5.00	2.15	2.91	4.42	2.29	3.10	4.72	2.68	3.61	5.58
1.0	1.0	1.0	1.0	1.1	1.1	1.1	1.1	1.1	1.1	1.1	1.1											
27.6	30.6	32.6	35.1	38.1	40.1	42.6	46.1	50.1	54.1	58.1	62.1	5.20	8.20	4.61	6.36	9.60	4.70	6.44	9.81	4.91	6.67	10.43
1.0	1.0	1.0	1.0	1.0	1.1	1.1	1.1	1.1	1.1	1.1	1.1											
30.0	33.0	35.0	37.5	40.5	42.5	45.0	48.5	52.5	56.5	60.5	64.5	4.00	6.40	3.16	4.34	6.70	3.28	4.48	6.94	3.60	4.88	7.65
1.0	1.0	1.0	1.0	1.0	1.1	1.1	1.1	1.1	1.1	1.1	1.1											
31.5	34.5	36.5	39.0	42.0	44.0	46.5	50.0	54.0	58.0	62.0	66.0	3.20	5.20	2.15	2.92	4.44	2.30	3.11	4.74	2.69	3.62	5.60
1.0	1.0	1.0	1.0	1.1	1.1	1.1	1.1	1.1	1.1	1.1	1.1											
26.6	29.6	31.6	34.1	37.1	39.1	41.6	45.2	49.2	53.2	57.2	61.2	5.60	9.00	5.09	7.01	10.44	5.16	7.07	10.66	5.33	7.25	11.28
1.0	1.0	1.0	1.0	1.0	1.1	1.1	1.1	1.1	1.1	1.1	1.1											
31.1	34.1	36.1	38.6	40.3	43.6	46.1	49.6	53.6	57.6	61.6	65.6	3.40	5.60	2.41	3.28	5.04	2.55	3.46	5.32	2.93	3.94	6.14
1.0	1.0	1.0	1.0	1.0	1.1	1.1	1.1	1.1	1.1	1.1	1.1											
27.7	30.7	32.7	35.2	38.2	40.3	42.8	46.3	50.3	54.3	58.3	62.3	5.00	8.20	4.38	6.04	9.18	4.47	6.13	9.39	4.70	6.39	10.01
1.0	1.0	1.0	1.0	1.0	1.1	1.1	1.1	1.1	1.1	1.1	1.1											
31.9	34.9	36.9	39.4	42.4	44.4	46.9	50.4	54.4	58.4	62.4	66.4	3.00	5.00	1.90	2.56	3.85	2.05	2.76	4.17	2.46	3.30	5.07
1.0	1.0	1.0	1.0	1.1	1.1	1.1	1.1	1.1	1.1	1.1	1.1											
30.6	33.6	35.6	38.1	41.1	43.1	45.6	49.1	53.1	57.1	61.1	65.1	3.60	6.00	2.66	3.64	5.62	2.80	3.81	5.89	3.16	4.26	6.66
1.0	1.0	1.0	1.0	1.0	1.1	1.1	1.1	1.1	1.1	1.1	1.1											

⚠ **WARNING** ** = Sheave Rim Speed over 6,000 feet per minute - See Page 236

CLASSICAL SECTION PRE-ENGINEERED DRIVE SELECTION TABLES

A, AP, AK & AX PRE-ENGINEERED TABLES RATIO 1.63 - 2.09

Driven Speed for Motor Speed of			Sheave Datum Diameters		V-Belt Number and Center Distance (other sizes may be available, see page 215)																	
1160 RPM	1750 RPM	3450 RPM	Small Sheave	Large Sheave	Speed Ratio	A 26	A 29	A 31	A 33	A 35	A 37	A 40	A 42	A 43	A 46	A 49	A 53	A 57	A 60	A 65	A 68	A 71
7.12	10.74	2118	4.20	17.00	1.63	—	—	7.2	8.2	9.2	10.3	11.8	12.8	13.3	14.8	16.3	18.3	20.3	21.8	24.3	25.8	27.3
						—	—	0.8	0.8	0.8	0.9	0.9	0.9	0.9	0.9	0.9	0.9	0.9	1.0	1.0	1.0	1.0
711	1073	2115	6.40	10.60	1.63	—	—	—	—	—	—	—	—	—	10.1	11.6	13.6	15.7	17.2	19.7	21.2	22.7
						—	—	—	—	—	—	—	—	—	0.9	0.9	0.9	0.9	0.9	1.0	1.0	1.0
692	1044	2057	3.00	5.20	1.68	7.1	8.6	9.6	10.7	11.7	12.7	14.2	15.2	15.7	17.2	18.7	20.7	22.7	24.2	26.7	28.2	29.7
						0.8	0.8	0.8	0.8	0.9	0.9	0.9	0.9	0.9	0.9	0.9	0.9	1.0	1.0	1.0	1.0	1.0
687	1036	2.42	7.00	12.00	1.69	—	—	—	—	—	—	—	—	—	—	—	12.0	14.0	15.5	18.1	19.6	21.1
						—	—	—	—	—	—	—	—	—	—	—	0.9	0.9	0.9	0.9	1.0	1.0
684	1032	2035	3.20	5.60	1.70	6.6	8.2	9.2	12.2	11.2	12.2	13.7	14.7	15.2	16.7	18.2	20.2	22.2	23.7	26.2	27.7	29.2
						0.8	0.8	0.8	0.8	0.9	0.9	0.9	0.9	0.9	0.9	0.9	0.9	1.0	1.0	1.0	1.0	1.0
683	1031	2033	5.20	9.00	1.70	—	—	—	—	—	—	9.3	10.3	10.8	12.4	13.9	15.9	17.9	19.4	21.9	23.4	24.9
						—	—	—	—	—	—	0.8	0.9	0.9	0.9	0.9	0.9	0.9	0.9	1.0	1.0	1.0
680	1026	2022	4.00	7.00	1.71	—	—	7.4	8.4	9.4	10.4	11.9	12.9	13.4	14.9	16.4	18.4	20.5	22.0	24.5	26.0	27.5
						—	—	0.8	0.8	0.8	0.9	0.9	0.9	0.9	0.9	0.9	0.9	0.9	1.0	1.0	1.0	1.0
677	1022	2015	3.40	6.00	1.71	—	7.7	8.7	9.7	10.7	11.7	13.2	14.2	14.7	16.2	17.7	19.7	21.7	23.2	25.7	27.2	28.7
						—	0.8	0.8	0.8	0.8	0.9	0.9	0.9	0.9	0.9	0.9	0.9	0.9	1.0	1.0	1.0	1.0
672	1013	1997	3.60	6.40	1.73	—	7.2	8.2	9.2	10.2	11.2	12.7	13.7	14.2	15.7	17.2	19.2	21.2	22.8	25.3	26.8	28.3
						—	0.8	0.8	0.8	0.8	0.9	0.9	0.9	0.9	0.9	0.9	0.9	0.9	1.0	1.0	1.0	1.0
668	1008	1987	6.00	10.60	1.74	—	—	—	—	—	—	—	—	—	10.4	11.9	13.9	15.9	17.5	20.0	21.5	23.0
						—	—	—	—	—	—	—	—	—	0.9	0.9	0.9	0.9	0.9	1.0	1.0	1.0
666	1004	1980	4.60	8.20	1.74	—	—	—	—	—	8.9	10.4	11.5	12.0	13.5	15.0	17.0	19.0	20.5	23.0	24.5	26.0
						—	—	—	—	—	0.8	0.9	0.9	0.9	0.9	0.9	0.9	0.9	0.9	1.0	1.0	1.0
658	993	1958	5.00	9.00	1.76	—	—	—	—	—	—	9.4	10.5	11.0	12.5	14.0	16.0	18.0	19.6	22.1	23.6	25.1
						—	—	—	—	—	—	0.8	0.9	0.9	0.9	0.9	0.9	0.9	0.9	1.0	1.0	1.0
644	972	1917	3.00	5.60	1.80	6.8	8.3	9.3	10.3	11.3	12.3	13.8	14.8	15.3	16.8	18.3	20.4	22.4	23.9	26.4	27.9	29.4
						0.8	0.8	0.8	0.8	0.8	0.9	0.9	0.9	0.9	0.9	0.9	0.9	0.9	1.0	1.0	1.0	1.0
640	966	1904	3.20	6.00	1.81	6.3	7.8	8.8	9.8	10.8	11.8	13.4	14.4	14.9	16.4	17.9	19.9	21.9	23.4	25.9	27.4	28.5
						0.8	0.8	0.8	0.8	0.8	0.9	0.9	0.9	0.9	0.9	0.9	0.9	0.9	1.0	1.0	1.0	1.0
637	961	1894	3.40	6.40	1.82	—	7.3	8.3	9.3	10.3	11.4	12.9	13.9	14.4	15.9	17.4	19.4	21.4	22.9	25.4	26.9	28.4
						—	0.8	0.8	0.8	0.8	0.9	0.9	0.9	0.9	0.9	0.9	0.9	0.9	1.0	1.0	1.0	1.0
630	950	1873	6.40	12.00	1.84	—	—	—	—	—	—	—	—	—	—	—	12.4	14.4	16.0	18.5	20.0	21.5
						—	—	—	—	—	—	—	—	—	—	—	0.9	0.9	0.9	0.9	1.0	1.0
625	944	1860	5.60	10.60	1.85	—	—	—	—	—	—	—	—	—	10.6	12.2	14.2	16.2	17.8	20.3	21.8	23.3
						—	—	—	—	—	—	—	—	—	0.9	0.9	0.9	0.9	0.9	1.0	1.0	1.0
616	929	1832	3.60	7.00	1.88	—	—	7.6	8.7	9.7	10.7	12.2	13.2	13.7	15.2	16.7	18.7	20.8	22.3	24.8	26.3	27.8
						—	—	0.8	0.8	0.8	0.8	0.9	0.9	0.9	0.9	0.9	0.9	0.9	1.0	1.0	1.0	1.0
611	922	1817	4.20	8.20	1.90	—	—	—	—	8.2	9.2	10.7	11.7	12.2	13.8	15.3	17.3	19.3	20.8	23.3	24.8	26.3
						—	—	—	—	0.8	0.8	0.9	0.9	0.9	0.9	0.9	0.9	0.9	0.9	1.0	1.0	1.0
608	918	1809	4.60	9.00	1.91	—	—	—	—	—	—	9.7	10.7	11.3	12.8	14.3	16.3	18.3	19.8	22.4	23.9	25.4
						—	—	—	—	—	—	0.8	0.9	0.9	0.9	0.9	0.9	0.9	0.9	1.0	1.0	1.0
603	910	1794	3.00	6.00	1.92	6.4	7.9	9.0	10.0	11.0	12.0	13.5	14.5	15.0	16.5	18.0	20.0	22.0	23.5	26.0	27.5	29.0
						0.8	0.8	0.8	0.8	0.8	0.9	0.9	0.9	0.9	0.9	0.9	0.9	0.9	1.0	1.0	1.0	1.0
602	908	1790	3.20	6.40	1.93	—	7.4	8.5	9.5	10.5	11.5	13.0	14.0	14.5	16.0	17.5	19.5	21.6	23.1	25.6	27.1	28.6
						—	0.8	0.8	0.8	0.8	0.9	0.9	0.9	0.9	0.9	0.9	0.9	0.9	1.0	1.0	1.0	1.0
592	893	1760	6.00	12.00	1.96	—	—	—	—	—	—	—	—	—	—	10.6	12.7	14.7	16.2	18.8	20.3	21.8
						—	—	—	—	—	—	—	—	—	—	0.9	0.9	1.0	1.0	1.0	1.0	1.0
584	881	1737	3.40	7.00	1.99	—	6.7	7.8	8.8	9.8	10.8	12.4	13.4	13.9	15.4	16.9	18.9	20.9	22.4	24.9	26.4	27.9
						—	0.8	0.8	0.8	08	0.8	0.9	0.9	0.9	0.9	0.9	0.9	0.9	1.0	1.0	1.0	1.0
583	880	1735	4.00	8.20	1.99	—	—	—	—	8.3	9.3	10.9	11.9	12.4	13.9	15.4	17.4	19.5	21.0	23.5	25.0	26.5
						—	—	—	—	0.8	0.8	0.9	0.9	0.9	0.9	0.9	0.9	0.9	0.9	1.0	1.0	1.0
583	879	1733	5.20	10.60	1.99	—	—	—	—	—	—	—	—	—	10.9	12.4	14.5	16.5	18.0	20.6	22.1	23.6
						—	—	—	—	—	—	—	—	—	0.9	0.9	0.9	0.9	0.9	1.0	1.0	1.0
567	855	1686	3.00	6.40	2.05	—	7.6	8.6	9.6	10.6	11.6	13.2	14.2	14.7	16.2	17.7	19.7	21.7	23.2	25.7	27.2	28.7
						—	0.8	0.8	0.8	0.8	0.9	0.9	0.9	0.9	0.9	0.9	0.9	0.9	1.0	1.0	1.0	1.0
561	847	1669	5.00	10.60	2.07	—	—	—	—	—	—	—	—	9.5	11.0	12.6	14.6	16.7	18.2	20.7	22.2	23.7
						—	—	—	—	—	—	—	—	0.8	0.9	0.9	0.9	0.9	0.9	1.0	1.0	1.0
558	842	1660	4.20	9.00	2.08	—	—	—	—	—	8.4	10.0	11.0	11.5	13.1	14.6	16.6	18.6	20.1	22.7	24.2	25.7
						—	—	—	—	—	0.8	0.8	0.9	0.9	0.9	0.9	0.9	0.9	0.9	1.0	1.0	1.0
554	836	1648	5.60	12.00	2.09	—	—	—	—	—	—	—	—	—	—	10.9	12.9	15.0	16.5	19.1	20.6	22.1
						—	—	—	—	—	—	—	—	—	—	0.9	0.9	0.9	0.9	0.9	1.0	1.0

⚠**WARNING** ** = Sheave Rim Speed over 6,000 feet per minute - See Page 236

CLASSICAL SECTION PRE-ENGINEERED DRIVE SELECTION TABLES

A, AP, AK & AX PRE-ENGINEERED TABLES — RATIO 1.63 - 2.09

V-Belt Number and Center Distance (Other sizes may be available, see page 215)												Sheave Datum Diameters		Rated HP per Belt (Includes Added HP for Speed Ratio)								
														Super Blue Ribbon & Aramax AP & AK RPM of Small Sheave			Super II A RPM of Small Sheave			Gold Label Cog-Belt AX RPM of Small Sheave		
A 75	A 81	A 85	A 90	A 96	A 100	A 105	A 112	A 120	A 128	A 136	A 144	Small Sheave	Large Sheave	1160 RPM	1750 RPM	3450 RPM	1160 RPM	1750 RPM	3450 RPM	1160 RPM	1750 RPM	3450 RPM
29.3	32.3	34.3	36.8	39.8	41.8	44.3	47.8	51.8	55.8	59.8	63.8	4.20	7.00	3.41	4.69	7.25	3.53	4.83	7.48	3.83	5.20	8.16
1.0	1.0	1.0	1.0	1.0	1.1	1.1	1.1	1.1	1.1	1.1	1.1											
24.7	27.7	29.7	32.2	35.2	37.2	39.7	43.2	47.3	51.3	55.3	59.3	6.40	10.60	6.02	8.27	11.86	6.06	8.29	12.14	6.16	8.37	12.87
1.0	1.0	1.0	1.0	1.0	1.0	1.1	1.1	1.1	1.1	1.1	1.1											
31.7	34.7	36.7	39.2	42.2	44.2	46.7	50.2	54.2	58.2	62.2	66.2	3.00	5.20	1.91	2.57	3.87	2.06	2.77	4.18	2.47	3.31	5.09
1.0	1.0	1.0	1.0	1.0	1.1	1.1	1.1	1.1	1.1	1.1	1.1											
23.1	26.1	28.1	30.6	33.6	45.6	38.1	41.7	45.7	49.7	53.7	57.7	7.00	12.00	6.71	9.17	**	6.73	9.18	**	6.77	9.19	**
1.0	1.0	1.0	1.0	1.0	1.0	1.1	1.1	1.1	1.1	1.1	1.1											
31.2	34.2	36.2	38.7	41.7	43.7	46.2	49.7	53.7	57.7	61.7	65.7	3.20	5.60	2.16	2.94	4.48	2.31	3.12	4.77	2.70	3.63	5.63
1.0	1.0	1.0	1.0	1.0	1.1	1.1	1.1	1.1	1.1	1.1	1.1											
26.9	29.9	31.9	34.4	37.4	39.5	42.0	45.5	49.5	53.5	57.5	61.5	5.20	9.00	4.63	6.38	9.64	4.71	6.46	9.86	4.92	6.69	10.47
1.0	1.0	1.0	1.0	1.0	1.1	1.1	1.1	1.1	1.1	1.1	1.1											
29.5	32.5	34.5	37.0	40.0	42.0	44.5	48.0	52.0	56.0	60.0	64.0	4.00	7.00	3.17	4.36	6.74	3.29	4.50	6.98	3.61	4.90	7.69
1.0	1.0	1.0	1.0	1.0	1.1	1.1	1.1	1.1	1.1	1.1	1.1											
30.7	33.7	35.7	38.2	41.2	43.2	45.7	49.3	53.3	57.3	61.3	65.3	3.40	6.00	2.42	3.30	5.07	2.56	3.48	5.35	2.94	3.96	6.17
1.0	1.0	1.0	1.0	1.0	1.1	1.1	1.1	1.1	1.1	1.1	1.1											
30.3	33.3	35.3	37.8	40.8	42.8	45.3	48.8	52.8	56.8	60.8	64.8	3.60	6.40	2.67	3.66	5.65	2.81	3.82	5.91	3.17	4.28	6.69
1.0	1.0	1.0	1.0	1.0	1.1	1.1	1.1	1.1	1.1	1.1	1.1											
25.0	28.0	30.0	32.5	35.5	37.5	40.0	43.6	47.6	51.6	55.6	59.6	6.00	10.60	5.57	7.66	11.22	5.63	7.71	11.47	5.76	7.83	12.13
1.0	1.0	1.0	1.0	1.0	1.0	1.1	1.1	1.1	1.1	1.1	1.1											
28.0	31.0	33.0	35.6	38.6	40.6	43.1	46.6	50.6	54.6	58.6	62.6	4.60	8.20	3.91	5.39	8.28	4.01	5.50	8.50	4.28	5.81	9.13
1.0	1.0	1.0	1.0	1.0	1.1	1.1	1.1	1.1	1.1	1.1	1.1											
27.1	30.1	32.1	34.6	37.6	39.6	42.1	45.6	49.6	53.6	57.6	61.6	5.00	9.00	4.39	6.06	9.22	4.48	6.15	9.43	4.71	6.41	10.04
1.0	1.0	1.0	1.0	1.0	1.0	1.1	1.1	1.1	1.1	1.1	1.1											
31.4	34.4	36.4	38.9	41.9	43.9	46.4	49.9	53.9	57.9	61.9	65.9	3.00	5.60	1.91	2.58	3.89	2.07	2.78	4.21	2.48	3.32	5.12
1.0	1.0	1.0	1.0	1.0	1.1	1.1	1.1	1.1	1.1	1.1	1.1											
30.9	33.9	35.9	38.4	41.4	43.4	45.9	49.4	53.4	57.4	61.4	65.4	3.20	6.00	2.17	2.95	4.50	2.32	3.14	4.80	2.71	3.65	5.66
1.0	1.0	1.0	1.0	1.0	1.1	1.1	1.1	1.1	1.1	1.1	1.1											
30.4	33.4	35.4	37.9	40.9	42.9	45.4	48.9	52.9	56.9	60.9	64.9	3.40	6.40	2.43	3.31	5.09	23.57	3.49	5.37	2.94	3.97	6.19
1.0	1.0	1.0	1.0	1.0	1.1	1.1	1.1	1.1	1.1	1.1	1.1											
23.5	26.6	28.6	31.1	34.1	36.1	38.6	42.1	46.1	50.1	54.1	58.1	6.40	12.00	6.04	8.29	11.91	6.08	8.32	12.18	6.17	8.39	12.92
1.0	1.0	1.0	1.0	1.0	1.0	1.1	1.1	1.1	1.1	1.1	1.1											
25.3	28.3	30.3	32.8	35.8	37.8	40.3	43.9	47.9	51.9	55.9	59.9	5.60	10.60	5.11	7.04	10.50	5.18	7.10	10.72	5.35	7.28	11.35
1.0	1.0	1.0	1.0	1.0	1.0	1.1	1.1	1.1	1.1	1.1	1.1											
29.8	32.8	34.8	37.3	40.3	42.3	44.8	48.3	52.3	56.3	60.3	64.3	3.60	7.00	2.68	3.67	5.67	2.82	3.84	5.94	3.17	4.29	6.72
1.0	1.0	1.0	1.0	1.0	1.1	1.1	1.1	1.1	1.1	1.1	1.1											
28.3	31.3	33.4	35.9	38.9	40.9	43.4	46.9	50.9	54.9	58.9	62.9	4.20	8.20	3.43	4.72	7.30	3.55	4.86	7.53	3.85	5.22	8.21
1.0	1.0	1.0	1.0	1.0	1.1	1.1	1.1	1.1	1.1	1.1	1.1											
27.4	30.4	32.4	34.9	37.9	39.9	42.4	45.9	49.9	53.9	57.9	61.9	4.60	9.00	3.92	5.40	8.31	4.02	5.52	8.52	4.29	5.83	9.16
1.0	1.0	1.0	1.0	1.0	1.0	1.1	1.1	1.1	1.1	1.1	1.1											
31.0	34.0	36.1	38.6	41.6	43.6	46.1	49.6	53.6	57.6	61.6	65.6	3.00	6.00	1.92	2.59	3.91	2.07	2.79	4.23	2.48	3.33	5.13
1.0	1.0	1.0	1.0	1.0	1.1	1.1	1.1	1.1	1.1	1.1	1.1											
30.6	33.6	35.6	38.1	41.1	43.1	45.6	49.1	53.1	57.1	61.1	65.1	3.20	6.40	2.18	2.96	4.52	2.32	3.14	4.81	2.72	3.65	5.67
1.0	1.0	1.0	1.0	1.0	1.1	1.1	1.1	1.1	1.1	1.1	1.1											
23.8	26.8	28.9	31.4	34.4	36.4	38.9	42.4	46.4	50.4	54.4	58.4	6.00	12.00	5.58	7.68	11.26	5.64	7.72	11.50	5.77	7.85	12.17
1.0	1.0	1.0	1.0	1.0	1.0	1.1	1.1	1.1	1.1	1.1	1.1											
29.9	32.9	34.9	37.4	40.4	42.4	44.9	48.4	52.5	56.5	60.5	64.5	34.0	7.00	2.43	3.32	5.11	2.58	3.50	5.39	2.95	3.98	6.21
1.0	1.0	1.0	1.0	1.0	1.1	1.1	1.1	1.1	1.1	1.1	1.1											
28.5	31.5	33.5	36.0	39.0	41.0	43.5	47.0	51.0	55.0	59.0	63.0	4.00	8.20	3.19	4.38	6.78	3.31	4.52	7.03	3.63	4.92	7.73
1.0	1.0	1.0	1.0	1.0	1.0	1.1	1.1	1.1	1.1	1.1	1.1											
25.6	28.6	30.6	33.1	36.1	38.1	40.7	44.2	48.2	52.2	56.2	60.2	5.20	10.60	4.64	6.40	9.69	4.73	6.49	9.90	4.94	6.72	10.52
1.0	1.0	1.0	1.0	1.0	1.0	1.1	1.1	1.1	1.1	1.1	1.1											
30.7	33.7	35.7	38.2	41.2	43.2	45.7	49.2	53.2	57.2	61.2	65.2	3.00	6.40	1.92	2.60	3.93	2.08	2.80	4.24	2.49	3.33	5.15
1.0	1.0	1.0	1.0	1.0	1.1	1.1	1.1	1.1	1.1	1.1	1.1											
25.7	28.8	30.8	33.3	36.3	38.3	40.8	44.3	48.3	52.3	56.3	60.3	5.00	10.60	4.41	6.08	9.26	4.50	6.17	9.47	4.73	6.43	10.08
1.0	1.0	1.0	1.0	1.0	1.0	1.1	1.1	1.1	1.1	1.1	1.1											
27.7	30.7	32.7	35.2	38.2	40.2	42.7	46.2	50.2	54.2	58.2	62.2	4.20	9.00	3.44	4.73	7.32	3.55	4.86	7.55	3.85	5.23	8.23
1.0	1.0	1.0	1.0	1.0	1.0	1.1	1.1	1.1	1.1	1.1	1.1											
???	27.1	29.2	31.7	34.7	36.7	39.2	42.7	46.7	50.7	54.7	58.7	5.60	12.00	5.12	7.05	10.52	5.19	7.12	10.75	5.36	7.29	11.37
1.0	1.0	1.0	1.0	1.0	1.0	1.0	1.1	1.1	1.1	1.1	1.1											

⚠ **WARNING** ** = Sheave Rim Speed over 6,000 feet per minute - See Page 236

CLASSICAL SECTION PRE-ENGINEERED DRIVE SELECTION TABLES

A, AP, AK & AX PRE-ENGINEERED TABLES RATIO 2.10 - 2.90

Driven Speed for Motor Speed of			Sheave Datum Diameters		V-Belt Number and Center Distance (other sizes may be available, see page 215)																	
1160 RPM	1750 RPM	3450 RPM	Small Sheave	Large Sheave	Speed Ratio	A 26	A 29	A 31	A 33	A 35	A 37	A 40	A 42	A 43	A 46	A 49	A 53	A 57	A 60	A 65	A 68	A 71
552	833	1642	3.20	7.00	2.10	—	6.9	7.9	8.9	10.0	11.0	12.5	13.5	14.0	15.5	17.0	19.0	21.1	22.6	25.1	26.6	28.1
						—	0.8	0.8	0.8	0.8	0.8	0.9	0.9	0.9	0.9	0.9	0.9	0.9	1.0	1.0	1.0	1.0
551	832	1640	7.00	15.00	2.10	—	—	—	—	—	—	—	—	—	—	—	—	—	12.7	15.4	16.9	18.4
						—	—	—	—	—	—	—	—	—	—	—	—	—	0.9	0.9	0.9	0.9
533	804	1585	4.00	9.00	2.18	—	—	—	—	—	8.6	10.1	11.2	11.7	13.2	14.7	16.8	18.8	20.3	22.8	24.3	25.8
						—	—	—	—	—	0.8	0.8	0.9	0.9	0.9	0.9	0.9	0.9	0.9	1.0	1.0	1.0
529	797	1572	3.60	8.20	2.19	—	—	—	7.5	8.6	9.6	11.1	12.2	12.7	14.2	15.7	17.7	19.7	21.3	23.8	25.3	26.8
						—	—	—	0.8	0.8	0.8	0.8	0.9	0.9	0.9	0.9	0.9	0.9	0.9	1.0	1.0	1.0
520	784	1547	3.00	7.00	2.23	—	7.0	8.0	9.1	10.1	11.1	12.6	13.6	14.2	15.7	17.2	19.2	21.2	22.7	25.2	26.7	28.2
						—	0.8	0.8	0.8	0.8	0.8	0.9	0.9	0.9	0.9	0.9	0.9	0.9	0.9	1.0	1.0	1.0
519	782	1542	4.60	10.60	2.24	—	—	—	—	—	—	—	9.2	9.8	11.3	12.9	14.9	16.9	18.5	21.0	22.5	24.0
						—	—	—	—	—	—	—	0.8	0.8	0.9	0.9	0.9	0.9	0.9	0.9	1.0	1.0
516	779	1535	5.20	12.00	2.25	—	—	—	—	—	—	—	—	—	—	11.1	13.2	15.3	16.8	19.3	20.9	22.4
						—	—	—	—	—	—	—	—	—	—	0.8	0.9	0.9	0.9	0.9	0.9	1.0
506	763	1504	6.40	15.00	2.29	—	—	—	—	—	—	—	—	—	—	—	—	—	13.1	15.8	17.3	18.9
						—	—	—	—	—	—	—	—	—	—	—	—	—	0.9	0.9	0.9	0.9
501	756	1490	3.40	8.20	2.32	—	—	—	7.7	8.7	9.7	11.3	12.3	12.8	14.3	15.9	17.9	19.9	21.4	23.9	25.4	26.9
						—	—	—	0.8	0.8	0.8	0.8	0.9	0.9	0.9	0.9	0.9	0.9	0.9	1.0	1.0	1.0
497	750	1479	5.00	12.00	2.33	—	—	—	—	—	—	—	—	—	—	11.3	13.3	15.4	16.9	19.5	21.0	22.5
						—	—	—	—	—	—	—	—	—	—	0.8	0.9	0.9	0.9	0.9	0.9	1.0
483	728	1436	3.60	9.00	2.40	—	—	—	—	—	8.8	10.4	11.4	11.9	13.5	15.0	17.0	19.1	20.6	23.1	24.6	26.1
						—	—	—	—	—	0.8	0.8	0.8	0.9	0.9	0.9	0.9	0.9	0.9	1.0	1.0	1.0
476	718	1415	4.20	10.60	2.44	—	—	—	—	—	—	—	9.5	10.0	11.6	13.1	15.2	17.2	18.8	21.3	22.8	24.3
						—	—	—	—	—	—	—	0.8	0.8	0.8	0.9	0.9	0.9	0.9	0.9	1.0	1.0
475	717	1414	6.00	15.00	2.44	—	—	—	—	—	—	—	—	—	—	—	—	—	13.4	16.0	17.6	19.1
						—	—	—	—	—	—	—	—	—	—	—	—	—	0.9	0.9	0.9	0.9
474	714	1409	3.20	8.20	2.45	—	—	—	7.8	8.8	9.9	11.4	12.4	13.0	14.5	16.0	18.0	20.0	21.6	24.1	25.6	27.1
						—	—	—	0.8	0.8	0.8	0.8	0.9	0.9	0.9	0.9	0.9	0.9	0.9	1.0	1.0	1.0
461	695	1371	7.00	18.00	2.52	—	—	—	—	—	—	—	—	—	—	—	—	—	—	—	—	15.5
						—	—	—	—	—	—	—	—	—	—	—	—	—	—	—	—	0.9
459	693	1366	4.60	12.00	2.53	—	—	—	—	—	—	—	—	—	9.9	11.5	13.6	15.7	17.2	19.8	21.3	22.8
						—	—	—	—	—	—	—	—	—	0.8	0.8	0.9	0.9	0.9	0.9	0.9	1.0
458	691	1361	3.40	9.00	2.53	—	—	—	—	7.9	9.0	10.5	11.6	12.1	13.6	15.2	17.2	19.2	20.7	23.2	24.8	26.3
						—	—	—	—	0.8	0.8	0.8	0.8	0.9	0.9	0.9	0.9	0.9	0.9	1.0	1.0	1.0
454	685	1351	4.00	10.60	2.55	—	—	—	—	—	—	—	9.6	10.1	11.7	13.3	15.3	17.4	18.9	21.4	22.9	24.5
						—	—	—	—	—	—	—	0.8	0.8	0.9	0.9	0.9	0.9	0.9	0.9	1.0	1.0
446	673	1327	3.00	8.20	2.60	—	—	—	7.9	9.0	10.0	11.6	12.6	13.1	14.6	16.1	18.2	20.2	21.7	24.2	25.7	27.2
						—	—	—	0.8	0.8	0.8	0.8	0.9	0.9	0.9	0.9	0.9	0.9	0.9	1.0	1.0	1.0
445	671	1323	5.60	15.00	2.61	—	—	—	—	—	—	—	—	—	—	—	—	12.1	13.7	16.3	17.9	19.4
						—	—	—	—	—	—	—	—	—	—	—	—	0.8	0.9	0.9	0.9	0.9
433	653	1287	3.20	9.00	2.68	—	—	—	—	8.0	9.1	10.7	11.7	12.2	13.8	15.3	17.3	19.4	20.9	23.4	24.9	26.4
						—	—	—	—	0.8	0.8	0.8	0.8	0.9	0.9	0.9	0.9	0.9	0.9	1.0	1.0	1.0
423	638	1257	6.40	18.00	2.74	—	—	—	—	—	—	—	—	—	—	—	—	—	—	—	14.3	15.9
						—	—	—	—	—	—	—	—	—	—	—	—	—	—	—	0.9	0.9
421	636	1253	4.20	12.00	2.75	—	—	—	—	—	—	—	—	—	10.2	11.8	13.9	15.9	17.5	20.0	21.6	23.1
						—	—	—	—	—	—	—	—	—	0.8	0.8	0.9	0.9	0.9	0.9	0.9	1.0
415	625	1233	5.20	15.00	2.80	—	—	—	—	—	—	—	—	—	—	—	—	12.3	13.9	16.6	18.1	19.7
						—	—	—	—	—	—	—	—	—	—	—	—	0.8	0.9	0.9	0.9	0.9
412	621	1224	3.60	10.60	2.82	—	—	—	—	—	—	8.8	9.9	10.4	12.0	13.5	15.6	17.7	19.2	21.7	23.2	24.7
						—	—	—	—	—	—	0.8	0.9	0.8	0.8	0.9	0.9	0.9	0.9	0.9	1.0	1.0
408	615	1212	3.00	9.00	2.85	—	—	—	—	8.2	9.2	10.8	11.8	12.4	13.9	15.4	17.5	19.5	21.0	23.5	25.0	26.6
						—	—	—	—	0.8	0.8	0.8	0.8	0.8	0.9	0.9	0.9	0.9	0.9	1.0	1.0	1.0
402	607	1197	4.00	12.00	2.88	—	—	—	—	—	—	—	—	—	10.3	11.9	14.0	16.1	17.6	20.2	21.7	23.2
						—	—	—	—	—	—	—	—	—	0.8	0.8	0.9	0.9	0.9	0.9	0.9	1.0
399	602	1188	5.00	15.00	2.90	—	—	—	—	—	—	—	—	—	—	—	—	12.4	14.1	16.7	18.3	19.8
						—	—	—	—	—	—	—	—	—	—	—	—	0.8	0.9	0.9	0.9	0.9

⚠ **WARNING** ** = Sheave Rim Speed over 6,000 feet per minute - See Page 236

CLASSICAL SECTION PRE-ENGINEERED DRIVE SELECTION TABLES

A, AP, AK & AX PRE-ENGINEERED TABLES — RATIO 2.10 - 2.90

V-Belt Number and Center Distance (Other sizes may be available, see page 215)												Sheave Datum Diameters		Rated HP per Belt (Includes Added HP for Speed Ratio)								
														Super Blue Ribbon & Aramax AP & AK RPM of Small Sheave			Super II A RPM of Small Sheave			Gold Label Cog-Belt AX RPM of Small Sheave		
A 75	A 81	A 85	A 90	A 96	A 100	A 105	A 112	A 120	A 128	A 136	A 144	Small Sheave	Large Sheave	1160 RPM	1750 RPM	3450 RPM	1160 RPM	1750 RPM	3450 RPM	1160 RPM	1750 RPM	3450 RPM
30.1	33.1	35.1	37.6	40.6	42.6	45.1	48.6	52.6	56.6	60.6	64.6	3.20	7.00	2.18	2.97	4.53	2.33	3.15	4.83	2.72	3.66	5.69
1.0	1.0	1.0	1.0	1.0	1.1	1.1	1.1	1.1	1.1	1.1	1.1											
20.5	23.5	25.6	28.1	31.1	33.1	35.6	39.2	43.2	47.2	51.2	55.2	7.00	15.00	5.73	9.20	**	6.75	9.20	**	6.79	9.22	**
1.0	1.0	1.0	1.0	1.0	1.0	1.1	1.1	1.1	1.1	1.1	1.1											
27.8	30.8	32.8	35.4	38.4	40.4	42.9	46.4	50.4	54.4	58.4	62.4	4.00	9.00	3.19	4.39	6.80	3.31	4.53	7.04	3.63	4.93	7.75
1.0	1.0	1.0	1.0	1.0	1.0	1.1	1.1	1.1	1.1	1.1	1.1											
28.8	31.8	33.8	36.3	39.3	41.3	43.8	47.3	51.3	55.3	59.3	63.3	3.60	8.20	2.69	3.69	5.70	2.83	3.85	5.97	3.18	4.31	6.74
1.0	1.0	1.0	1.0	1.0	1.0	1.1	1.1	1.1	1.1	1.1	1.1											
30.2	33.2	35.2	37.7	40.7	42.7	45.3	48.8	52.8	56.8	60.8	64.8	3.00	7.00	1.93	2.61	3.94	2.08	2.80	4.25	2.49	3.34	5.16
1.0	1.0	1.0	1.0	1.0	1.1	1.1	1.1	1.1	1.1	1.1	1.1											
26.0	29.1	31.1	33.6	36.6	38.6	41.1	44.6	48.6	52.6	56.6	60.6	4.60	10.60	3.93	5.42	8.33	4.03	5.53	8.55	4.30	5.84	9.19
1.0	1.0	1.0	1.0	1.0	1.0	1.1	1.1	1.1	1.1	1.1	1.1											
24.4	27.4	29.4	32.0	35.0	37.0	39.5	43.0	47.0	51.0	55.0	59.0	5.20	12.00	4.65	6.41	9.71	4.73	6.50	9.92	4.94	6.73	10.54
1.0	1.0	1.0	1.0	1.0	1.0	1.0	1.1	1.1	1.1	1.1	1.1											
20.9	24.0	26.0	28.5	31.5	33.6	36.1	39.6	43.6	47.6	51.7	55.7	6.40	15.00	6.05	8.31	11.95	6.09	8.34	12.22	6.19	8.42	12.96
1.0	1.0	1.0	1.0	1.0	1.0	1.0	1.1	1.1	1.1	1.1	1.1											
28.9	31.9	34.0	36.5	39.5	41.5	44.0	47.5	51.5	55.5	59.5	63.5	3.40	8.20	2.44	3.33	5.13	2.58	3.51	5.42	2.96	3.00	6.23
1.0	1.0	1.0	1.0	1.0	1.0	1.1	1.1	1.1	1.1	1.1	1.1											
24.5	27.6	29.6	32.1	35.1	37.1	39.6	43.2	47.2	51.2	55.2	59.2	5.00	12.00	4.41	6.09	9.27	4.50	6.18	9.49	4.73	6.44	10.10
1.0	1.0	1.0	1.0	1.0	1.0	1.0	1.1	1.1	1.1	1.1	1.1											
28.1	31.1	33.1	35.7	38.7	40.7	43.2	46.7	50.7	54.7	58.7	62.7	3.60	9.00	2.70	3.69	5.71	2.83	3.86	5.98	3.19	4.31	6.76
1.0	1.0	1.0	1.0	1.0	1.0	1.1	1.1	1.1	1.1	1.1	1.1											
26.3	29.4	31.4	33.9	36.9	38.9	41.4	44.9	48.9	52.9	56.9	60.9	4.20	10.60	3.44	4.74	7.34	3.56	4.88	7.57	3.86	5.24	8.25
1.0	1.0	1.0	1.0	1.0	1.0	1.1	1.1	1.1	1.1	1.1	1.1											
21.2	24.2	26.3	28.8	31.8	33.9	36.4	39.9	43.9	47.9	52.0	56.0	6.00	15.00	5.59	7.70	11.29	5.65	7.74	11.53	5.78	7.87	12.20
1.0	1.0	1.0	1.0	1.0	1.0	1.0	1.1	1.1	1.1	1.1	1.1											
29.1	32.1	34.1	36.6	39.6	41.6	44.1	47.6	51.6	55.6	59.6	63.6	3.20	8.20	2.19	2.98	4.55	2.34	3.16	4.85	2.73	3.67	5.71
1.0	1.0	1.0	1.0	1.0	1.0	1.1	1.1	1.1	1.1	1.1	1.1											
17.7	20.8	22.9	25.4	28.5	30.5	33.1	36.6	40.6	44.7	48.7	52.7	7.00	18.00	6.73	9.21	**	6.75	9.22	**	6.79	9.23	**
1.0	1.0	1.0	1.0	1.0	1.0	1.0	1.0	1.1	1.1	1.1	1.1											
24.8	27.9	29.9	32.4	35.4	37.4	39.9	43.5	47.5	51.5	55.5	59.5	4.60	12.00	3.93	5.42	8.35	4.04	5.54	8.57	4.30	5.85	9.20
1.0	1.0	1.0	1.0	1.0	1.0	1.0	1.1	1.1	1.1	1.1	1.1											
28.3	31.3	33.3	35.8	38.8	40.8	43.3	46.8	50.8	54.8	58.8	62.8	3.40	9.00	2.44	3.34	5.14	2.59	3.51	5.43	2.96	4.00	6.24
1.0	1.0	1.0	1.0	1.0	1.1	1.1	1.1	1.1	1.1	1.1	1.1											
26.5	29.5	31.5	34.0	37.0	39.0	41.6	45.1	49.1	53.1	57.1	61.1	4.00	10.60	3.20	4.40	6.82	3.32	4.54	7.06	3.64	4.94	7.77
1.0	1.0	1.0	1.0	1.0	1.0	1.1	1.1	1.1	1.1	1.1	1.1											
29.2	32.2	34.3	36.8	39.8	41.8	44.3	47.8	51.8	55.8	59.8	63.8	3.00	8.20	1.93	2.61	3.96	2.09	2.81	4.27	2.50	3.35	5.18
1.0	1.0	1.0	1.0	1.0	1.0	1.1	1.1	1.1	1.1	1.1	1.1											
21.5	24.5	26.6	29.1	32.1	34.1	36.7	40.2	44.2	48.2	52.3	56.3	5.60	15.00	5.13	7.07	10.55	5.20	7.13	10.77	5.37	7.31	11.40
1.0	1.0	1.0	1.0	1.0	1.0	1.0	1.0	1.1	1.1	1.1	1.1											
28.4	31.4	33.4	36.0	39.0	41.0	43.5	47.0	51.0	55.0	59.0	63.0	3.20	9.00	2.19	2.98	4.56	2.34	3.17	4.86	2.73	3.68	5.72
1.0	1.0	1.0	1.0	1.0	1.0	1.1	1.1	1.1	1.1	1.1	1.1											
18.1	21.2	23.3	25.8	28.9	30.9	33.5	37.0	41.1	45.1	49.1	53.2	6.40	18.00	6.06	8.32	11.96	6.10	8.35	12.24	6.19	8.42	12.98
1.0	1.0	1.0	1.0	1.0	1.0	1.0	1.0	1.1	1.1	1.1	1.1											
25.1	28.2	30.2	32.7	35.7	37.7	40.2	43.8	47.8	51.8	55.8	59.8	4.20	12.00	3.45	4.75	7.35	3.56	4.88	7.58	3.87	5.25	8.26
1.0	1.0	1.0	1.0	1.0	1.0	1.0	1.1	1.1	1.1	1.1	1.1											
21.7	24.8	26.8	29.4	32.4	34.4	37.0	40.5	44.5	48.5	52.6	56.6	5.20	15.00	4.66	6.42	9.73	4.74	6.51	9.94	4.95	6.74	10.56
1.0	1.0	1.0	1.0	1.0	1.0	1.0	1.0	1.1	1.1	1.1	1.1											
26.8	29.8	31.8	34.3	37.3	39.3	41.9	45.4	49.4	53.4	57.4	61.4	3.60	10.60	2.70	3.70	5.73	2.84	3.86	5.99	3.19	4.32	6.77
1.0	1.0	1.0	1.0	1.0	1.0	1.0	1.1	1.1	1.1	1.1	1.1											
28.6	31.6	33.6	36.1	39.1	41.1	43.6	47.1	51.1	55.1	59.1	63.2	3.00	9.00	1.94	2.62	3.96	2.09	2.81	4.28	2.50	3.35	5.18
1.0	1.0	1.0	1.0	1.0	1.0	1.1	1.1	1.1	1.1	1.1	1.1											
25.3	28.3	30.3	32.8	35.9	37.9	40.4	43.9	47.9	51.9	55.9	60.0	4.00	12.00	3.20	4.40	6.83	3.32	4.55	7.07	3.64	4.94	7.78
1.0	1.0	1.0	1.0	1.0	1.0	1.0	1.1	1.1	1.1	1.1	1.1											
21.9	24.9	27.0	29.5	32.6	34.6	37.1	40.6	44.7	48.7	52.7	56.7	5.00	15.00	4.42	6.10	9.29	4.51	6.19	9.51	4.74	6.45	10.12
0.9	1.0	1.0	1.0	1.0	1.0	1.0	1.0	1.1	1.1	1.1	1.1											

⚠ **WARNING** ** = Sheave Rim Speed over 6,000 feet per minute - See Page 236

CLASSICAL SECTION PRE-ENGINEERED DRIVE SELECTION TABLES

A, AP, AK & AX PRE-ENGINEERED TABLES RATIO 2.92- 5.62

Driven Speed for Motor Speed of			Sheave Datum Diameters		V-Belt Number and Center Distance (other sizes may be available, see page 215)																	
1160 RPM	1750 RPM	3450 RPM	Small Sheave	Large Sheave	Speed Ratio	A 26	A 29	A 31	A 33	A 35	A 37	A 40	A 42	A 43	A 46	A 49	A 53	A 57	A 60	A 65	A 68	A 71
397	599	1182	6.00	18.00	2.92	—	—	—	—	—	—	—	—	—	—	—	—	—	—	—	14.6	16.2
						—	—	—	—	—	—	—	—	—	—	—	—	—	—	—	0.9	0.9
390	589	1161	3.40	10.60	2.97	—	—	—	—	—	—	8.9	10.0	10.5	12.1	13.7	15.7	17.8	19.3	21.9	23.4	24.9
						—	—	—	—	—	—	0.8	0.8	0.8	0.8	0.9	0.9	0.9	0.9	0.9	1.0	1.0
372	561	1106	5.60	18.00	3.12	—	—	—	—	—	—	—	—	—	—	—	—	—	—	—	14.8	16.4
						—	—	—	—	—	—	—	—	—	—	—	—	—	—	—	0.9	0.9
369	557	1097	4.60	15.00	3.14	—	—	—	—	—	—	—	—	—	—	—	—	12.7	14.3	17.0	18.5	20.1
						—	—	—	—	—	—	—	—	—	—	—	—	0.8	0.9	0.9	0.9	0.9
369	556	1097	3.20	10.60	3.14	—	—	—	—	—	—	9.1	10.1	10.7	12.3	13.8	15.9	17.9	19.5	22.0	23.5	25.0
						—	—	—	—	—	—	0.8	0.8	0.8	0.8	0.9	0.9	0.9	0.9	0.9	1.0	1.0
365	550	1084	3.60	12.00	3.18	—	—	—	—	—	—	—	—	—	10.6	12.2	14.3	16.4	17.9	20.5	22.0	23.5
						—	—	—	—	—	—	—	—	—	0.8	0.8	0.9	0.9	0.9	0.9	0.9	1.0
347	524	1033	3.00	10.60	3.34	—	—	—	—	—	—	9.2	10.3	10.8	12.4	14.0	16.0	18.1	19.6	22.1	23.7	25.2
						—	—	—	—	—	—	0.8	0.8	0.8	0.8	0.9	0.9	0.9	0.9	0.9	1.0	1.0
346	523	1030	5.20	18.00	3.35	—	—	—	—	—	—	—	—	—	—	—	—	—	—	13.4	15.1	16.7
						—	—	—	—	—	—	—	—	—	—	—	—	—	—	0.8	0.9	0.9
346	521	1028	3.40	12.00	3.36	—	—	—	—	—	—	—	—	—	10.7	12.3	14.4	16.5	18.0	20.6	22.1	23.7
						—	—	—	—	—	—	—	—	—	0.8	0.8	0.9	0.9	0.9	0.9	0.9	1.0
338	511	1007	4.20	15.00	3.43	—	—	—	—	—	—	—	—	—	—	—	—	12.9	14.6	17.2	18.8	20.4
						—	—	—	—	—	—	—	—	—	—	—	—	0.8	0.9	0.9	0.9	0.9
334	503	992	5.00	18.00	3.48	—	—	—	—	—	—	—	—	—	—	—	—	—	—	13.5	15.2	16.8
						—	—	—	—	—	—	—	—	—	—	—	—	—	—	0.8	0.9	0.9
327	493	972	3.20	12.00	3.55	—	—	—	—	—	—	—	—	9.2	10.8	12.4	14.5	16.6	18.2	20.7	22.3	23.8
						—	—	—	—	—	—	—	—	0.8	0.8	0.8	0.9	0.9	0.9	0.9	0.9	1.0
323	488	961	4.00	15.00	3.59	—	—	—	—	—	—	—	—	—	—	—	—	13.1	14.7	17.4	18.9	20.5
						—	—	—	—	—	—	—	—	—	—	—	—	0.8	0.9	0.9	0.9	0.9
308	465	917	4.60	18.00	3.76	—	—	—	—	—	—	—	—	—	—	—	—	—	—	13.8	15.4	17.1
						—	—	—	—	—	—	—	—	—	—	—	—	—	—	0.8	0.9	0.9
308	464	915	3.00	12.00	3.77	—	—	—	—	—	—	—	—	9.3	10.9	12.6	14.7	16.8	18.3	20.9	22.4	23.9
						—	—	—	—	—	—	—	—	0.8	0.8	0.8	0.9	0.9	0.9	0.9	0.9	0.9
293	442	871	3.60	15.00	3.96	—	—	—	—	—	—	—	—	—	—	—	11.1	13.3	15.0	17.6	19.2	20.8
						—	—	—	—	—	—	—	—	—	—	—	0.8	0.8	0.9	0.9	0.9	0.9
283	427	841	4.20	18.00	4.10	—	—	—	—	—	—	—	—	—	—	—	—	—	—	14.0	15.7	17.3
						—	—	—	—	—	—	—	—	—	—	—	—	—	—	0.8	0.8	0.9
278	419	826	3.40	15.00	4.18	—	—	—	—	—	—	—	—	—	—	—	11.2	13.4	15.1	17.8	19.3	20.9
						—	—	—	—	—	—	—	—	—	—	—	0.8	0.8	0.9	0.9	0.9	0.9
270	408	803	4.00	18.00	4.29	—	—	—	—	—	—	—	—	—	—	—	—	—	—	14.1	15.8	17.5
						—	—	—	—	—	—	—	—	—	—	—	—	—	—	0.8	0.8	0.9
262	396	780	3.20	15.00	4.42	—	—	—	—	—	—	—	—	—	—	—	11.3	13.6	15.2	17.9	19.5	21.0
						—	—	—	—	—	—	—	—	—	—	—	0.8	0.8	0.9	0.9	0.9	0.9
247	373	735	3.00	15.00	4.69	—	—	—	—	—	—	—	—	—	—	—	11.4	13.7	15.3	18.0	19.6	21.2
						—	—	—	—	—	—	—	—	—	—	—	0.8	0.8	0.8	0.9	0.9	0.9
245	369	728	3.60	18.00	4.74	—	—	—	—	—	—	—	—	—	—	—	—	—	—	14.4	16.1	17.7
						—	—	—	—	—	—	—	—	—	—	—	—	—	—	0.8	0.8	0.9
232	350	690	3.40	18.00	5.00	—	—	—	—	—	—	—	—	—	—	—	—	—	—	14.5	16.2	17.8
						—	—	—	—	—	—	—	—	—	—	—	—	—	—	0.8	0.8	0.9
219	331	652	3.20	18.00	5.29	—	—	—	—	—	—	—	—	—	—	—	—	—	—	14.6	16.3	18.0
						—	—	—	—	—	—	—	—	—	—	—	—	—	—	0.8	0.8	0.9
207	312	614	3.00	18.00	5.62	—	—	—	—	—	—	—	—	—	—	—	—	—	—	14.7	16.4	18.1
						—	—	—	—	—	—	—	—	—	—	—	—	—	—	0.8	0.8	0.9

⚠ **WARNING** ** = Sheave Rim Speed over 6,000 feet per minute - See Page 236

CLASSICAL SECTION PRE-ENGINEERED DRIVE SELECTION TABLES

A, AP, AK & AX PRE-ENGINEERED TABLES — RATIO 2.92 - 5.62

V-Belt Number and Center Distance (Other sizes may be available, see page 215)												Sheave Datum Diameters		Rated HP per Belt (Includes Added HP for Speed Ratio)								
														Super Blue Ribbon & Aramax AP & AK RPM of Small Sheave			Super II A RPM of Small Sheave			Gold Label Cog-Belt AX RPM of Small Sheave		
A 75	A 81	A 85	A 90	A 96	A 100	A 105	A 112	A 120	A 128	A 136	A 144	Small Sheave	Large Sheave	1160 RPM	1750 RPM	3450 RPM	1160 RPM	1750 RPM	3450 RPM	1160 RPM	1750 RPM	3450 RPM
18.3	21.5	23.5	26.1	29.2	31.2	33.8	37.3	41.4	45.4	49.4	53.5	6.00	18.00	5.60	7.70	11.30	5.85	7.75	11.55	5.79	7.87	12.21
0.9	0.9	1.0	1.0	1.0	1.0	1.0	1.0	1.1	1.1	1.1	1.1											
26.9	29.9	32.0	34.5	37.5	39.5	42.0	45.5	49.5	53.5	57.5	61.5	3.40	10.60	2.45	3.34	5.15	2.59	3.52	5.44	2.96	4.00	6.25
1.0	1.0	1.0	1.0	1.0	1.0	1.0	1.1	1.1	1.1	1.1	1.1											
18.6	21.7	23.8	26.4	29.5	31.5	34.1	37.6	41.7	45.7	49.7	53.8	5.60	18.00	5.13	7.07	10.56	5.20	7.14	10.78	5.37	7.31	11.41
0.9	0.9	1.0	1.0	1.0	1.0	1.0	1.0	1.1	1.1	1.1	1.1											
22.1	25.2	27.3	29.8	32.8	34.9	37.4	40.9	45.0	49.0	53.0	57.0	4.60	15.00	3.94	5.43	8.36	4.04	5.54	8.58	4.31	5.86	9.22
0.9	1.0	1.0	1.0	1.0	1.0	1.0	1.0	1.1	1.1	1.1	1.1											
27.1	30.1	32.1	34.6	37.6	39.6	42.1	45.7	49.7	53.7	57.7	61.7	3.20	10.60	2.19	2.98	4.57	2.34	3.17	4.87	2.73	3.68	5.73
1.0	1.0	1.0	1.0	1.0	1.0	1.0	1.1	1.1	1.1	1.1	1.1											
25.6	28.6	30.6	33.1	36.2	38.2	40.7	44.2	48.2	52.2	56.2	60.3	3.60	12.00	2.70	3.70	5.73	2.84	3.87	6.00	3.19	4.32	6.78
1.0	1.0	1.0	1.0	1.0	1.0	1.0	1.1	1.1	1.1	1.1	1.1											
27.2	30.2	32.2	34.8	37.8	39.8	42.3	45.8	49.8	53.8	57.8	61.9	3.00	10.60	1.94	2.62	3.97	2.09	2.82	4.28	2.50	3.36	5.19
1.0	1.0	1.0	1.0	1.0	1.0	1.0	1.0	1.1	1.1	1.1	1.1											
18.8	22.0	24.1	26.7	29.7	31.8	34.3	37.9	41.9	46.0	50.0	54.0	5.20	18.00	4.66	6.43	9.74	4.74	6.51	9.95	4.95	6.74	10.56
0.9	0.9	1.0	1.0	1.0	1.0	1.0	1.0	1.1	1.1	1.1	1.1											
25.7	28.7	30.8	33.3	36.3	38.3	40.8	44.3	48.4	52.4	56.4	60.4	3.40	12.00	2.45	3.35	5.16	2.59	3.52	5.44	2.97	4.00	6.26
1.0	1.0	1.0	1.0	1.0	1.0	1.0	1.1	1.1	1.1	1.1	1.1											
22.4	25.5	27.5	30.1	33.1	35.2	37.7	41.2	45.2	49.3	53.3	57.3	4.20	15.00	3.45	4.75	7.36	3.57	4.89	7.59	3.87	5.25	8.27
0.9	1.0	1.0	1.0	1.0	1.0	1.0	1.0	1.1	1.1	1.1	1.1											
19.0	22.1	24.2	26.8	29.9	31.9	34.5	38.0	42.1	46.1	50.2	54.2	5.00	18.00	4.42	6.10	9.30	4.51	6.19	9.51	4.74	6.45	10.13
0.9	0.9	1.0	1.0	1.0	1.0	1.0	1.0	1.0	1.1	1.1	1.1											
25.8	28.9	30.9	33.4	36.4	38.5	41.0	44.5	48.5	52.5	56.5	60.6	3.20	12.00	2.20	2.99	4.57	2.34	3.17	4.87	2.74	3.68	5.73
1.0	1.0	1.0	1.0	1.0	1.0	1.0	1.1	1.1	1.1	1.1	1.1											
22.6	25.6	27.7	30.2	33.3	35.3	37.8	41.4	45.4	49.4	53.4	57.5	4.00	15.00	3.20	4.41	6.84	3.33	4.55	7.08	3.65	4.95	7.79
0.9	1.0	1.0	1.0	1.0	1.0	1.0	1.0	1.1	1.1	1.1	1.1											
19.2	22.4	24.5	27.1	30.2	32.2	34.8	38.3	42.4	46.4	50.5	54.5	4.60	18.00	3.94	5.43	8.37	4.04	5.55	8.59	4.31	5.86	9.22
0.9	0.9	1.0	1.0	1.0	1.0	1.0	1.0	1.0	1.1	1.1	1.1											
26.0	29.0	31.0	33.6	36.6	38.6	41.1	44.6	48.7	52.7	56.7	60.7	3.00	12.00	1.94	2.62	3.97	2.09	2.82	4.29	2.50	3.36	5.19
1.0	1.0	1.0	1.0	1.0	1.0	1.0	1.1	1.1	1.1	1.1	1.1											
22.8	25.9	28.0	30.5	33.6	35.6	38.1	41.7	45.7	49.7	53.7	57.8	3.60	15.00	2.70	3.70	5.74	2.84	3.87	6.01	3.20	4.32	6.78
0.9	1.0	1.0	1.0	1.0	1.0	1.0	1.0	1.1	1.1	1.1	1.1											
19.5	22.7	24.8	27.3	30.4	32.5	35.0	38.6	42.7	46.7	50.7	54.8	4.20	18.00	3.45	4.75	7.37	3.57	4.89	7.60	3.87	5.26	8.28
0.9	0.9	0.9	1.0	1.0	1.0	1.0	1.0	1.0	1.1	1.1	1.1											
23.0	26.1	28.1	30.6	32.6	35.7	38.3	41.8	45.8	49.9	53.9	57.9	3.40	15.00	2.45	3.35	5.17	2.59	3.53	5.45	2.97	4.01	6.26
0.9	1.0	1.0	1.0	1.0	1.0	1.0	1.0	1.1	1.1	1.1	1.1											
19.6	22.8	24.9	27.5	30.6	32.6	35.2	38.7	42.8	46.8	50.9	54.9	4.00	18.00	3.20	4.41	6.84	3.33	4.55	7.08	3.65	4.95	7.79
0.9	0.9	0.9	1.0	1.0	1.0	1.0	1.0	1.0	1.1	1.1	1.1											
23.1	26.2	28.2	30.8	33.8	35.9	38.4	41.9	46.0	50.0	54.0	58.1	3.20	15.00	2.20	2.99	4.58	2.35	3.18	4.88	2.74	3.69	5.74
0.9	0.9	1.0	1.0	1.0	1.0	1.0	1.0	1.1	1.1	1.1	1.1											
23.2	26.3	28.4	30.9	34.0	36.0	38.5	42.1	46.1	50.2	54.2	58.2	3.00	15.00	1.94	2.63	3.98	2.10	2.82	4.29	2.50	3.36	5.20
0.9	1.0	1.0	1.0	1.0	1.0	1.0	1.0	1.1	1.1	1.1	1.1											
19.9	23.1	25.2	27.8	30.8	32.9	35.5	39.0	43.1	47.1	51.2	55.2	3.60	18.00	2.71	3.71	5.74	2.84	3.87	6.01	3.20	4.33	6.79
0.9	0.9	0.9	1.0	1.0	1.0	1.0	1.0	1.0	1.1	1.1	1.1											
20.0	23.2	25.3	27.9	31.0	33.0	35.6	39.2	43.2	47.3	51.3	55.4	3.40	18.00	2.45	3.35	5.17	2.59	3.53	5.45	2.97	4.01	6.27
0.9	0.9	0.9	1.0	1.0	1.0	1.0	1.0	1.0	1.1	1.1	1.1											
20.1	23.3	25.4	28.0	31.1	33.2	35.7	39.3	43.4	47.4	51.5	55.5	3.20	18.00	2.20	2.99	4.58	2.35	3.18	4.88	2.74	3.69	5.74
0.9	0.9	0.9	1.0	1.0	1.0	1.0	1.0	1.0	1.1	1.1	1.1											
20.3	23.5	25.6	28.2	31.3	33.3	35.9	39.4	43.5	47.6	51.6	55.7	3.00	18.00	1.94	2.63	3.98	2.10	2.82	4.30	2.50	3.36	5.20
0.9	0.9	0.9	1.0	1.0	1.0	1.0	1.0	1.0	1.1	1.1	1.1											

⚠ **WARNING** ** = Sheave Rim Speed over 6,000 feet per minute - See Page 236

CLASSICAL SECTION PRE-ENGINEERED DRIVE SELECTION TABLES

B, BP, BK, BX PRE-ENGINEERED TABLES RATIO 1.00 - 1.04

Driven Speed for Motor Speed of			Sheave Datum Diameters		V-Belt Number and Center Distance (other sizes may be available, see page 216)																					
870 RPM	1160 RPM	1750 RPM	Small Sheave	Large Sheave	Speed Ratio	B 35	B 38	B 42	B 46	B 52	B 56	B 60	B 62	B 65	B 68	B 70	B 75	B 78	B 80	B 85	B 90	B 95	B 100	B 105	B 112
870	1160	1750	4.60	4.60	1.00	11.2	12.7	14.7	16.7	19.7	21.7	23.7	24.7	26.2	27.7	28.7	31.2	32.7	33.7	36.2	38.7	41.2	43.7	46.2	49.7
			*			0.8	0.8	0.9	0.9	0.9	0.9	0.9	0.9	0.9	0.9	1.0	1.0	1.0	1.0	1.0	1.0	1.0	1.0	1.0	1.0
870	1160	1750	4.80	4.80	1.00	10.9	12.4	14.4	16.4	19.4	21.4	23.4	24.4	25.9	27.4	28.4	30.9	32.4	33.4	35.9	38.4	40.9	43.4	45.9	49.4
			*			0.8	0.8	0.9	0.9	0.9	0.9	0.9	0.9	0.9	0.9	1.0	1.0	1.0	1.0	1.0	1.0	1.0	1.0	1.0	1.0
870	1160	1750	5.00	5.00	1.00	10.5	12.0	14.0	16.0	19.0	21.0	23.0	24.0	25.5	27.0	28.0	30.5	32.0	33.0	35.5	38.0	40.5	43.0	45.5	49.0
			*			0.8	0.8	0.9	0.9	0.9	0.9	0.9	0.9	0.9	0.9	1.0	1.0	1.0	1.0	1.0	1.0	1.0	1.0	1.0	1.0
870	1160	1750	5.20	5.20	1.00	10.2	11.7	13.7	15.7	18.7	20.7	22.7	23.7	25.2	26.7	27.7	30.2	31.7	32.7	35.2	37.7	40.2	42.7	45.2	48.7
			*			0.8	0.8	0.9	0.9	0.9	0.9	0.9	0.9	0.9	0.9	1.0	1.0	1.0	1.0	1.0	1.0	1.0	1.0	1.0	1.0
870	1160	1750	5.40	5.40	1.00	9.9	11.4	13.4	15.4	18.4	20.4	22.4	23.4	24.9	26.4	27.4	29.9	31.4	32.4	34.9	37.4	39.9	42.4	44.9	48.4
						0.8	0.8	0.9	0.9	0.9	0.9	0.9	0.9	0.9	0.9	1.0	1.0	1.0	1.0	1.0	1.0	1.0	1.0	1.0	1.0
870	1160	1750	5.60	5.60	1.00	9.6	11.1	13.1	15.1	18.1	20.1	22.1	23.1	24.6	26.1	27.1	29.6	31.1	32.1	34.6	37.1	39.6	42.1	44.6	48.1
						0.8	0.8	0.9	0.9	0.9	0.9	0.9	0.9	0.9	0.9	1.0	1.0	1.0	1.0	1.0	1.0	1.0	1.0	1.0	1.0
870	1160	1750	5.80	5.80	1.00	9.3	10.8	12.8	14.8	17.8	19.8	21.8	22.8	24.3	25.8	26.8	29.3	30.8	31.8	34.3	36.8	39.3	41.8	44.3	47.8
						0.8	0.8	0.9	0.9	0.9	0.9	0.9	0.9	0.9	0.9	1.0	1.0	1.0	1.0	1.0	1.0	1.0	1.0	1.0	1.0
870	1160	1750	6.00	6.00	1.00	9.0	10.5	12.5	14.5	17.5	19.5	21.5	22.5	24.0	25.5	26.5	29.0	30.5	31.5	34.0	36.5	39.0	41.5	44.0	47.5
						0.8	0.8	0.9	0.9	0.9	0.9	0.9	0.9	0.9	0.9	1.0	1.0	1.0	1.0	1.0	1.0	1.0	1.0	1.0	1.0
870	1160	1750	6.20	6.20	1.00	8.7	10.2	12.2	14.2	17.2	19.2	21.2	22.2	23.7	25.2	26.2	28.7	30.2	31.2	33.7	36.2	38.7	41.2	43.7	47.2
						0.8	0.8	0.9	0.9	0.9	0.9	0.9	0.9	0.9	0.9	1.0	1.0	1.0	1.0	1.0	1.0	1.0	1.0	1.0	1.0
870	1160	1750	6.40	6.40	1.00	8.3	9.8	11.8	13.8	16.8	18.8	20.8	21.8	23.3	24.8	25.8	28.3	29.8	30.8	33.3	35.8	38.3	40.8	43.3	46.8
						0.8	0.8	0.9	0.9	0.9	0.9	0.9	0.9	0.9	0.9	1.0	1.0	1.0	1.0	1.0	1.0	1.0	1.0	1.0	1.0
870	1160	1750	6.60	6.60	1.00	—	9.5	11.5	13.5	16.5	18.5	20.5	21.5	23.0	24.5	25.5	28.0	29.5	30.5	33.0	35.5	38.0	40.5	43.0	46.5
						—	0.8	0.9	0.9	0.9	0.9	0.9	0.9	0.9	0.9	1.0	1.0	1.0	1.0	1.0	1.0	1.0	1.0	1.0	1.0
870	1160	1750	6.80	6.80	1.00	—	9.2	11.2	13.2	16.2	18.2	20.2	21.2	22.7	24.2	25.2	27.7	29.2	30.2	32.7	35.2	37.7	40.2	42.7	46.2
						—	0.8	0.9	0.9	0.9	0.9	0.9	0.9	0.9	0.9	1.0	1.0	1.0	1.0	1.0	1.0	1.0	1.0	1.0	1.0
870	1160	1750	7.00	7.00	1.00	—	8.9	10.9	12.9	15.9	17.9	19.9	20.9	22.4	23.9	24.9	27.4	28.9	29.9	32.4	34.9	37.4	39.9	42.4	45.9
						—	0.8	0.9	0.9	0.9	0.9	0.9	0.9	0.9	0.9	1.0	1.0	1.0	1.0	1.0	1.0	1.0	1.0	1.0	1.0
870	1160	1750	7.40	7.40	1.00	—	—	10.3	12.3	15.3	17.3	19.3	20.3	21.8	23.3	24.3	26.8	28.3	29.3	31.8	34.3	36.8	39.3	41.8	45.3
						—	—	0.9	0.9	0.9	0.9	0.9	0.9	0.9	0.9	1.0	1.0	1.0	1.0	1.0	1.0	1.0	1.0	1.0	1.0
870	1160	1750	8.00	8.00	1.00	—	—	—	11.3	14.3	16.3	18.3	19.3	20.8	22.3	23.3	25.8	27.3	28.3	30.8	33.3	35.8	38.3	40.8	44.3
						—	—	—	0.9	0.9	0.9	0.9	0.9	0.9	0.9	1.0	1.0	1.0	1.0	1.0	1.0	1.0	1.0	1.0	1.0
870	1160	1750	8.60	8.60	1.00	—	—	—	10.4	13.4	15.4	17.4	18.4	19.9	21.4	22.4	24.9	26.4	27.4	29.9	32.4	34.9	37.4	39.9	43.4
						—	—	—	0.9	0.9	0.9	0.9	0.9	0.9	0.9	1.0	1.0	1.0	1.0	1.0	1.0	1.0	1.0	1.0	1.0
870	1160	1750	9.40	9.40	1.00	—	—	—	-0.0	12.1	14.1	16.1	17.1	18.6	20.1	21.1	23.6	25.1	26.1	28.6	31.1	33.6	36.1	38.6	42.1
						—	—	—	-0.0	0.9	0.9	0.9	0.9	0.9	0.9	1.0	1.0	1.0	1.0	1.0	1.0	1.0	1.0	1.0	1.0
846	1128	1702	6.80	7.00	1.03	—	9.1	11.1	13.1	16.1	18.1	20.1	21.1	22.6	24.1	25.1	27.6	29.1	30.1	32.6	35.1	37.6	40.1	42.6	46.1
						—	0.8	0.9	0.9	0.9	0.9	0.9	0.9	0.9	0.9	1.0	1.0	1.0	1.0	1.0	1.0	1.0	1.0	1.0	1.0
846	1128	1701	6.60	6.80	1.03	—	9.4	11.4	13.4	16.4	18.4	20.4	21.4	22.9	24.4	25.4	27.9	29.4	30.4	32.9	35.4	37.9	40.4	42.9	46.4
						—	0.8	0.9	0.9	0.9	0.9	0.9	0.9	0.9	0.9	1.0	1.0	1.0	1.0	1.0	1.0	1.0	1.0	1.0	1.0
845	1127	1700	6.40	6.60	1.03	8.2	9.7	11.7	13.7	16.7	18.7	20.7	21.7	23.2	24.7	25.7	28.2	29.7	30.7	33.2	35.7	38.2	40.7	43.2	46.7
						0.8	0.8	0.9	0.9	0.9	0.9	0.9	0.9	0.9	0.9	1.0	1.0	1.0	1.0	1.0	1.0	1.0	1.0	1.0	1.0
844	1126	1698	6.20	6.40	1.03	8.5	10.0	12.0	14.0	17.0	19.0	21.0	22.0	23.5	25.0	26.0	28.5	30.0	31.0	33.5	36.0	38.5	41.0	43.5	47.0
						0.8	0.8	0.9	0.9	0.9	0.9	0.9	0.9	0.9	0.9	1.0	1.0	1.0	1.0	1.0	1.0	1.0	1.0	1.0	1.0
843	1125	1697	6.00	6.20	1.03	8.8	10.3	12.3	14.3	17.3	19.3	21.3	22.3	23.8	25.3	26.3	28.8	30.3	31.3	33.8	36.3	38.8	41.3	43.8	47.3
						0.8	0.8	0.9	0.9	0.9	0.9	0.9	0.9	0.9	0.9	1.0	1.0	1.0	1.0	1.0	1.0	1.0	1.0	1.0	1.0
843	1123	1695	5.80	6.00	1.03	9.1	10.6	12.6	14.6	17.6	19.6	21.6	22.6	24.1	25.6	26.6	29.1	30.6	31.6	34.1	36.6	39.1	41.6	44.1	47.6
						0.8	0.8	0.9	0.9	0.9	0.9	0.9	0.9	0.9	0.9	1.0	1.0	1.0	1.0	1.0	1.0	1.0	1.0	1.0	1.0
842	1122	1693	5.60	5.80	1.03	9.4	10.9	12.9	14.9	17.9	19.9	21.9	22.9	24.4	25.9	26.9	29.4	30.9	31.9	34.4	36.9	39.4	41.9	44.4	47.9
						0.8	0.8	0.9	0.9	0.9	0.9	0.9	0.9	0.9	0.9	1.0	1.0	1.0	1.0	1.0	1.0	1.0	1.0	1.0	1.0
841	1121	1691	5.40	5.60	1.03	9.8	11.3	13.3	15.3	18.3	20.3	22.3	23.3	24.8	26.3	27.3	29.8	31.3	32.3	34.8	37.3	39.8	42.3	44.8	48.3
						0.8	0.8	0.9	0.9	0.9	0.9	0.9	0.9	0.9	0.9	1.0	1.0	1.0	1.0	1.0	1.0	1.0	1.0	1.0	1.0
840	1120	1689	5.20	5.40	1.04	10.1	11.6	13.6	15.6	18.6	20.6	22.6	23.6	25.1	26.6	27.6	30.1	31.6	32.6	35.1	37.6	40.1	42.6	45.1	48.6
			*			0.8	0.8	0.9	0.9	0.9	0.9	0.9	0.9	0.9	0.9	1.0	1.0	1.0	1.0	1.0	1.0	1.0	1.0	1.0	1.0
839	1118	1687	5.00	5.20	1.04	10.4	11.9	13.9	15.9	18.9	20.9	22.9	23.9	25.4	26.9	27.9	30.4	31.9	32.9	35.4	37.9	40.4	42.9	45.4	48.9
			*			0.8	0.8	0.9	0.9	0.9	0.9	0.9	0.9	0.9	0.9	1.0	1.0	1.0	1.0	1.0	1.0	1.0	1.0	1.0	1.0
837	1117	1685	4.80	5.00	1.04	10.7	12.2	14.2	16.2	19.2	21.2	23.2	24.2	25.7	27.2	28.2	30.7	32.2	33.2	35.7	38.2	40.7	43.2	45.7	49.2
			*			0.8	0.8	0.9	0.9	0.9	0.9	0.9	0.9	0.9	0.9	1.0	1.0	1.0	1.0	1.0	1.0	1.0	1.0	1.0	1.0
836	1115	1682	4.60	4.80	1.04	11.0	12.5	14.5	16.5	19.5	21.5	23.5	24.5	26.0	27.5	28.5	31.0	32.5	33.5	36.0	38.5	41.0	43.5	46.0	49.5
			*			0.8	0.8	0.9	0.9	0.9	0.9	0.9	0.9	0.9	0.9	1.0	1.0	1.0	1.0	1.0	1.0	1.0	1.0	1.0	1.0

* Diameters below RMA minimum for other than Cog-Belt V-belts. Use with Super Blue Ribbon or Aramax V-belts will result in reduced life and loss of efficiency.

CLASSICAL SECTION PRE-ENGINEERED DRIVE SELECTION TABLES

B, BP, BK, BX PRE-ENGINEERED TABLES — RATIO 1.00 - 1.04

V-Belt Number and Center Distance (Other sizes may be available, see page 216)															Sheave Datum Diameters		Rated HP per Belt (Includes Added HP for Speed Ratio)								
																	Super Blue Ribbon & Aramax BP & BK RPM of Small Sheave			Super II (B) RPM of Small Sheave			Gold Label Cog-Belt (BX) RPM of Small Sheave		
B 120	B 128	B 136	B 144	B 154	B 158	B 173	B 180	B 195	B 210	B 225	B 240	B 255	B 270	B 300	Small Sheave	Large Sheave	870 RPM	1160 RPM	1750 RPM	870 RPM	1160 RPM	1750 RPM	870 RPM	1160 RPM	1750 RPM
53.7	57.7	61.7	65.7	70.7	72.7	80.2	83.7	91.2	98.7	105.4	112.9	120.4	127.9	142.9	4.60	4.60	3.27	4.02	5.23	3.81	4.73	6.28	4.55	5.67	7.63
1.0	1.1	1.1	1.1	1.1	1.1	1.1	1.1	1.1	1.1	1.2	1.2	1.2	1.2	1.1	*										
53.4	57.4	61.4	65.4	70.4	72.4	79.9	83.4	90.9	98.4	105.1	112.6	120.1	127.6	142.6	4.80	4.80	3.57	4.40	5.77	4.09	5.08	6.77	4.80	5.98	8.05
1.0	1.1	1.1	1.1	1.1	1.1	1.1	1.1	1.1	1.1	1.2	1.2	1.2	1.2	1.1	*										
53.0	57.0	61.0	65.0	70.0	72.0	79.5	83.0	90.5	98.0	104.8	112.3	119.8	127.3	142.3	5.00	5.00	3.87	4.78	6.30	4.37	5.43	7.25	5.04	6.29	8.47
1.0	1.1	1.1	1.1	1.1	1.1	1.1	1.1	1.1	1.1	1.2	1.2	1.2	1.2	1.1	*										
52.7	56.7	60.7	64.7	69.7	71.7	79.2	82.7	90.2	97.7	104.5	112.0	119.5	127.0	142.0	5.20	5.20	4.17	5.16	6.82	4.64	5.78	7.72	5.29	6.60	8.88
1.0	1.1	1.1	1.1	1.1	1.1	1.1	1.1	1.1	1.1	1.2	1.2	1.2	1.2	1.1	*										
52.4	56.4	60.4	64.4	69.4	71.4	78.9	82.4	89.9	97.4	104.2	111.7	119.2	126.7	141.7	5.40	5.40	4.47	5.54	7.33	4.91	6.13	8.19	5.53	6.91	9.29
1.0	1.1	1.1	1.1	1.1	1.1	1.1	1.1	1.1	1.1	1.2	1.2	1.2	1.2	1.1											
52.1	56.1	60.1	64.1	69.1	71.1	78.6	82.1	89.6	97.1	103.9	111.4	118.9	126.4	141.4	5.60	5.60	4.76	5.92	7.84	5.19	6.47	8.65	5.78	7.21	9.69
1.0	1.1	1.1	1.1	1.1	1.1	1.1	1.1	1.1	1.1	1.2	1.2	1.2	1.2	1.1											
51.8	55.8	59.8	63.8	68.8	70.8	78.3	81.8	89.3	96.8	103.5	111.0	118.5	126.0	141.0	5.80	5.80	5.06	6.29	8.35	5.46	6.81	9.11	6.02	7.51	10.08
1.0	1.1	1.1	1.1	1.1	1.1	1.1	1.1	1.1	1.1	1.2	1.2	1.2	1.2	1.1											
51.5	55.5	59.5	63.5	68.5	70.5	78.0	81.5	89.0	96.5	103.2	110.7	118.2	125.7	140.7	6.00	6.00	5.35	6.66	8.85	5.72	7.15	9.56	6.26	7.81	10.47
1.0	1.1	1.1	1.1	1.1	1.1	1.1	1.1	1.1	1.1	1.2	1.2	1.2	1.2	1.1											
51.2	55.2	59.2	63.2	68.2	70.2	77.7	81.2	88.7	96.2	102.9	110.4	117.9	125.4	140.4	6.20	6.20	5.64	7.03	9.34	5.99	7.48	10.00	6.49	8.10	10.86
1.0	1.1	1.1	1.1	1.1	1.1	1.1	1.1	1.1	1.1	1.2	1.2	1.2	1.2	1.1											
50.8	54.8	58.8	62.8	67.8	69.8	77.3	80.8	88.3	95.8	102.6	110.1	117.6	125.1	140.1	6.40	6.40	5.93	7.39	9.83	6.26	7.82	10.44	6.73	8.40	11.24
1.0	1.1	1.1	1.1	1.1	1.1	1.1	1.1	1.1	1.1	1.2	1.2	1.2	1.2	1.1											
50.5	54.5	58.5	62.5	67.5	69.5	77.0	80.5	88.0	95.5	102.3	109.8	117.3	124.8	139.8	6.60	6.60	6.22	7.76	10.31	6.52	8.15	10.88	6.96	8.69	11.61
1.0	1.1	1.1	1.1	1.1	1.1	1.1	1.1	1.1	1.1	1.2	1.2	1.2	1.2	1.1											
???	54.2	58.2	62.2	67.2	69.2	76.7	80.2	87.7	95.2	102.0	109.5	117.0	124.5	139.5	6.80	6.80	6.50	8.12	10.78	6.79	8.48	11.30	7.20	8.97	11.98
1.0	1.1	1.1	1.1	1.1	1.1	1.1	1.1	1.1	1.1	1.2	1.2	1.2	1.2	1.1											
9.9	53.9	57.9	61.9	66.9	68.9	76.4	79.9	87.4	94.9	101.7	109.2	116.7	124.2	139.2	7.00	7.00	6.79	8.48	11.25	7.05	8.80	11.72	7.43	9.26	12.34
1.0	1.1	1.1	1.1	1.1	1.1	1.1	1.1	1.1	1.1	1.2	1.2	1.2	1.2	1.1											
49.3	53.3	57.3	51.3	66.3	68.3	75.8	79.3	86.8	94.3	101.0	108.5	116.0	123.5	138.5	7.40	7.40	7.36	9.18	12.17	7.57	9.45	12.55	7.89	9.82	13.04
1.0	1.1	1.1	1.1	1.1	1.1	1.1	1.1	1.1	1.1	1.2	1.2	1.2	1.2	1.1											
48.3	52.3	56.3	60.3	65.3	67.3	74.8	78.3	85.8	93.3	100.1	107.6	115.1	122.6	137.6	8.00	8.00	8.19	10.23	13.50	8.33	10.40	13.73	8.56	10.65	14.06
1.0	1.1	1.1	1.1	1.1	1.1	1.1	1.1	1.1	1.1	1.2	1.2	1.2	1.2	1.1											
47.4	51.4	55.4	59.4	64.4	66.4	73.9	77.4	84.9	92.4	99.1	106.6	114.1	121.6	136.6	8.60	8.60	9.02	11.25	14.77	9.09	11.32	14.86	9.23	11.45	15.02
1.0	1.1	1.1	1.1	1.1	1.1	1.1	1.1	1.1	1.1	1.2	1.2	1.2	1.2	1.1											
46.1	50.1	54.1	58.1	63.1	65.1	72.6	76.1	83.6	91.1	97.9	105.4	112.9	120.4	135.4	9.40	9.40	10.10	12.58	16.36	10.07	12.52	16.27	10.09	12.49	16.21
1.0	1.1	1.1	1.1	1.1	1.1	1.1	1.1	1.1	1.1	1.2	1.2	1.2	1.2	1.1											
50.1	54.1	58.1	62.1	67.1	69.1	76.6	80.1	87.6	95.1	101.8	109.3	116.8	124.3	139.3	6.80	7.00	6.56	8.19	10.89	6.84	8.55	11.41	7.25	9.04	12.08
1.0	1.1	1.1	1.1	1.1	1.1	1.1	1.1	1.1	1.1	1.2	1.2	1.2	1.2	1.1											
50.4	54.4	58.4	62.4	67.4	69.4	76.9	80.4	87.9	95.4	102.1	109.6	117.1	124.6	139.6	6.60	6.80	6.27	7.83	10.42	6.58	8.22	10.98	7.02	8.76	11.72
1.0	1.1	1.1	1.1	1.1	1.1	1.1	1.1	1.1	1.1	1.2	1.2	1.2	1.2	1.1											
50.7	54.7	58.7	62.7	67.7	69.7	77.2	80.7	88.2	95.7	102.4	109.9	117.4	124.9	139.9	6.40	6.60	5.98	7.47	9.94	6.31	7.89	10.55	6.78	8.47	11.35
1.0	1.1	1.1	1.1	1.1	1.1	1.1	1.1	1.1	1.1	1.2	1.2	1.2	1.2	1.1											
51.0	55.0	59.0	63.0	68.0	70.0	77.5	81.0	88.5	96.0	102.8	110.3	117.8	125.3	140.3	6.20	6.40	5.70	7.10	9.45	6.05	7.56	10.12	6.55	8.18	10.97
1.0	1.1	1.1	1.1	1.1	1.1	1.1	1.1	1.1	1.1	1.2	1.2	1.2	1.2	1.1											
51.3	55.3	59.3	63.3	68.3	70.3	77.8	81.3	88.8	96.3	103.1	110.6	118.1	125.6	140.6	6.00	6.20	5.41	6.74	8.96	5.78	7.23	9.68	6.31	7.89	10.59
1.0	1.1	1.1	1.1	1.1	1.1	1.1	1.1	1.1	1.1	1.2	1.2	1.2	1.2	1.1											
51.6	55.6	59.6	63.6	68.6	70.6	78.1	81.6	89.1	96.6	103.4	110.9	118.4	125.9	140.9	5.80	6.00	5.12	6.37	8.47	5.52	6.89	9.23	6.08	7.59	10.20
1.0	1.1	1.1	1.1	1.1	1.1	1.1	1.1	1.1	1.1	1.2	1.2	1.2	1.2	1.1											
51.9	55.9	59.9	63.9	68.9	70.9	78.4	81.9	89.4	96.9	103.7	111.2	118.7	126.2	141.2	5.60	5.80	4.82	6.00	7.97	5.25	6.55	8.78	5.84	7.29	9.81
1.0	1.1	1.1	1.1	1.1	1.1	1.1	1.1	1.1	1.1	1.2	1.2	1.2	1.2	1.1											
52.3	56.3	60.3	64.3	69.3	71.3	78.8	82.3	89.8	97.3	104.0	111.5	119.0	126.5	141.5	5.40	5.60	4.53	5.63	7.46	4.98	6.21	8.32	5.60	6.99	9.41
1.0	1.1	1.1	1.1	1.1	1.1	1.1	1.1	1.1	1.1	1.2	1.2	1.2	1.2	1.1											
52.6	56.6	60.6	64.6	69.6	71.6	79.1	82.6	90.1	97.6	104.3	111.8	119.3	126.8	141.8	5.20	5.40	4.23	5.25	6.95	4.71	5.87	7.85	5.36	6.69	9.01
1.0	1.1	1.1	1.1	1.1	1.1	1.1	1.1	1.1	1.1	1.2	1.2	1.2	1.2	1.1	*										
52.9	56.9	60.9	64.9	69.9	71.9	79.4	82.9	90.4	97.9	104.6	112.1	119.6	127.1	142.1	5.00	5.20	3.94	4.87	6.43	4.43	5.52	7.38	5.11	6.38	8.60
1.0	1.1	1.1	1.1	1.1	1.1	1.1	1.1	1.1	1.1	1.2	1.2	1.2	1.2	1.1	*										
53.2	57.2	61.2	65.2	70.2	72.2	79.7	83.2	90.7	98.2	105.0	112.5	120.0	127.5	142.5	4.80	5.00	3.64	4.50	5.91	4.16	5.17	6.91	4.87	6.08	8.19
1.0	1.1	1.1	1.1	1.1	1.1	1.1	1.1	1.1	1.1	1.2	1.2	1.2	1.2	1.1	*										
53.5	57.5	61.5	65.5	70.5	72.5	80.0	83.5	91.0	98.5	105.3	112.8	120.3	127.8	142.8	4.60	4.80	3.34	4.11	5.38	3.88	4.82	6.43	4.62	5.76	7.77
1.0	1.1	1.1	1.1	1.1	1.1	1.1	1.1	1.1	1.1	1.2	1.2	1.2	1.2	1.1	*										

* Diameters below RMA minimum for other than Cog-Belt V-belts. Use with Super Blue Ribbon or Aramax V-belts will result in reduced life and loss of efficiency.

CLASSICAL SECTION PRE-ENGINEERED DRIVE SELECTION TABLES

B, BP, BK, BX PRE-ENGINEERED TABLES RATIO 1.05 - 1.12

Driven Speed for Motor Speed of			Sheave Datum Diameters		V-Belt Number and Center Distance (other sizes may be available, see page 216)																				
870 RPM	1160 RPM	1750 RPM	Small Sheave	Large Sheave	Speed Ratio	B 35	B 38	B 42	B 46	B 52	B 56	B 60	B 62	B 65	B 68	B 70	B 75	B 78	B 80	B 85	B 90	B 95	B 100	B 105	B 112
825	1100	1660	7.00	7.40	1.05	—	—	10.6	12.6	15.6	17.6	19.6	20.6	22.1	23.6	24.6	27.1	28.6	29.6	32.1	34.6	37.1	39.6	42.1	45.6
						—	—	0.9	0.9	0.9	0.9	0.9	0.9	0.9	0.9	0.9	1.0	1.0	1.0	1.0	1.0	1.0	1.0	1.0	1.0
823	1097	1655	6.60	7.00	1.06	—	9.2	11.2	13.2	16.2	18.2	20.2	21.2	22.7	24.2	25.2	27.7	29.2	30.2	32.7	35.2	37.7	40.2	42.7	46.2
						—	0.8	0.9	0.9	0.9	0.9	0.9	0.9	0.9	0.9	0.9	1.0	1.0	1.0	1.0	1.0	1.0	1.0	1.0	1.0
821	1095	1652	6.40	6.80	1.06	—	9.5	11.5	13.5	16.5	18.5	20.5	21.5	23.0	24.5	25.5	28.0	29.5	30.5	33.0	35.5	38.0	40.5	43.0	46.5
						—	0.8	0.9	0.9	0.9	0.9	0.9	0.9	0.9	0.9	0.9	1.0	1.0	1.0	1.0	1.0	1.0	1.0	1.0	1.0
820	1093	1649	6.20	6.60	1.06	8.3	9.8	11.8	13.8	16.8	18.8	20.8	21.8	23.3	24.8	25.8	28.3	29.8	30.8	33.3	35.8	38.3	40.8	43.3	46.8
						0.8	0.8	0.9	0.9	0.9	0.9	0.9	0.9	0.9	0.9	0.9	1.0	1.0	1.0	1.0	1.0	1.0	1.0	1.0	1.0
818	1091	1646	6.00	6.40	1.06	8.7	10.2	12.2	14.2	17.2	19.2	21.2	22.2	23.7	25.2	26.2	28.7	30.2	31.2	33.7	36.2	38.7	41.2	43.7	47.2
						0.8	0.8	0.9	0.9	0.9	0.9	0.9	0.9	0.9	0.9	0.9	1.0	1.0	1.0	1.0	1.0	1.0	1.0	1.0	1.0
817	1089	1643	5.80	6.20	1.07	9.0	10.5	12.5	14.5	17.5	19.5	21.5	22.5	24.0	25.5	26.5	29.0	30.5	31.5	34.0	36.5	39.0	41.5	44.0	47.5
						0.8	0.8	0.9	0.9	0.9	0.9	0.9	0.9	0.9	0.9	0.9	1.0	1.0	1.0	1.0	1.0	1.0	1.0	1.0	1.0
815	1087	1640	5.60	6.00	1.07	9.3	10.8	12.8	14.8	17.8	19.8	21.8	22.8	24.3	25.8	26.8	29.3	30.8	31.8	34.3	36.8	39.3	41.8	44.3	47.8
						0.8	0.8	0.9	0.9	0.9	0.9	0.9	0.9	0.9	0.9	0.9	1.0	1.0	1.0	1.0	1.0	1.0	1.0	1.0	1.0
813	1085	1636	5.40	5.80	1.07	9.6	11.1	13.1	15.1	18.1	20.1	22.1	23.1	24.6	26.1	27.1	29.6	31.1	32.1	34.6	37.1	39.6	42.1	44.6	48.1
						0.8	0.8	0.9	0.9	0.9	0.9	0.9	0.9	0.9	0.9	0.9	1.0	1.0	1.0	1.0	1.0	1.0	1.0	1.0	1.0
812	1082	1633	8.00	8.60	1.07	—	—	—	10.9	13.9	15.9	17.9	18.9	20.4	21.9	22.9	25.4	26.9	27.9	30.4	32.9	35.4	37.9	40.4	43.9
						—	—	—	0.9	0.9	0.9	0.9	0.9	0.9	0.9	0.9	1.0	1.0	1.0	1.0	1.0	1.0	1.0	1.0	1.0
812	1082	1632	5.20	5.60	1.07	9.9	11.4	13.4	15.4	18.4	20.4	22.4	23.4	24.9	26.4	27.4	29.9	31.4	32.4	34.9	37.4	39.9	42.4	44.9	48.4
			*			0.8	0.8	0.9	0.9	0.9	0.9	0.9	0.9	0.9	0.9	0.9	1.0	1.0	1.0	1.0	1.0	1.0	1.0	1.0	1.0
809	1079	1628	5.00	5.40	1.07	10.2	11.7	13.7	15.7	18.7	20.7	22.7	23.7	25.2	26.7	27.7	30.2	31.7	32.7	35.2	37.7	40.2	42.7	45.2	48.7
			*			0.8	0.8	0.9	0.9	0.9	0.9	0.9	0.9	0.9	0.9	0.9	1.0	1.0	1.0	1.0	1.0	1.0	1.0	1.0	1.0
807	1077	1624	7.40	8.00	1.08	—	—	9.8	11.8	14.8	16.8	18.8	19.8	21.3	22.8	23.8	26.3	27.8	28.8	31.3	33.8	36.3	38.8	41.3	44.8
						—	—	0.9	0.9	0.9	0.9	0.9	0.9	0.9	0.9	0.9	1.0	1.0	1.0	1.0	1.0	1.0	1.0	1.0	1.0
807	1076	1624	4.80	5.20	1.08	10.5	12.0	14.0	16.0	19.0	21.0	23.0	24.0	25.5	27.0	28.0	30.5	32.0	33.0	35.5	38.0	40.5	43.0	45.5	49.0
			*			0.8	0.8	0.9	0.9	0.9	0.9	0.9	0.9	0.9	0.9	0.9	1.0	1.0	1.0	1.0	1.0	1.0	1.0	1.0	1.0
805	1073	1619	4.60	5.00	1.08	10.9	12.4	14.4	16.4	19.4	21.4	23.4	24.4	25.9	27.4	28.4	30.9	32.4	33.4	35.9	38.4	40.9	43.4	45.9	49.4
			*			0.8	0.8	0.9	0.9	0.9	0.9	0.9	0.9	0.9	0.9	1.0	1.0	1.0	1.0	1.0	1.0	1.0	1.0	1.0	1.0
803	1070	1615	6.80	7.40	1.08	—	8.7	10.7	12.7	15.7	17.7	19.7	20.7	22.2	23.7	24.7	27.2	28.7	29.7	32.2	34.7	37.2	39.7	42.2	45.7
						—	0.8	0.9	0.9	0.9	0.9	0.9	0.9	0.9	0.9	0.9	1.0	1.0	1.0	1.0	1.0	1.0	1.0	1.0	1.0
799	1065	1607	6.40	7.00	1.09	—	9.4	11.4	13.4	16.4	18.4	20.4	21.4	22.9	24.4	25.4	27.9	29.4	30.4	32.9	35.4	37.9	40.4	42.9	46.4
						—	0.8	0.9	0.9	0.9	0.9	0.9	0.9	0.9	0.9	0.9	1.0	1.0	1.0	1.0	1.0	1.0	1.0	1.0	1.0
799	1065	1606	8.60	9.40	1.09	—	—	—	—	12.8	14.8	16.8	17.8	19.3	20.8	21.8	24.3	25.8	26.8	29.3	31.8	34.3	36.8	39.3	42.8
						—	—	—	—	0.9	0.9	0.9	0.9	0.9	0.9	0.9	1.0	1.0	1.0	1.0	1.0	1.0	1.0	1.0	1.0
797	1063	1603	6.20	6.80	1.09	8.2	9.7	11.7	13.7	16.7	18.7	20.7	21.7	23.2	24.7	25.7	28.2	29.7	30.7	33.2	35.7	38.2	40.7	43.2	46.7
						0.8	0.8	0.9	0.9	0.9	0.9	0.9	0.9	0.9	0.9	0.9	1.0	1.0	1.0	1.0	1.0	1.0	1.0	1.0	1.0
795	1060	1599	6.00	6.60	1.09	8.5	10.0	12.0	14.0	17.0	19.0	21.0	22.0	23.5	25.0	26.0	28.5	30.0	31.0	33.5	36.0	38.5	41.0	43.5	47.0
						0.8	0.8	0.9	0.9	0.9	0.9	0.9	0.9	0.9	0.9	0.9	1.0	1.0	1.0	1.0	1.0	1.0	1.0	1.0	1.0
793	1057	1594	5.80	6.40	1.10	8.8	10.3	12.3	14.3	17.3	19.3	21.3	22.3	23.8	25.3	26.3	28.8	30.3	31.3	36.3	33.5	38.8	41.3	43.8	47.3
						0.8	0.8	0.9	0.9	0.9	0.9	0.9	0.9	0.9	0.9	0.9	1.0	1.0	1.0	1.0	1.0	1.0	1.0	1.0	1.0
790	1054	1590	5.60	6.20	1.10	9.1	10.6	12.6	14.6	17.6	19.6	21.6	22.6	24.1	25.6	26.6	29.1	30.6	31.6	34.1	36.6	39.1	41.6	44.1	47.6
						0.8	0.8	0.9	0.9	0.9	0.9	0.9	0.9	0.9	0.9	0.9	1.0	1.0	1.0	1.0	1.0	1.0	1.0	1.0	1.0
788	1050	1585	5.40	6.00	1.10	9.4	10.9	12.9	14.9	17.9	19.9	21.9	22.9	24.4	25.9	26.9	29.4	30.9	31.9	34.4	36.9	39.4	41.9	44.4	47.9
						0.8	0.8	0.9	0.9	0.9	0.9	0.9	0.9	0.9	0.9	0.9	1.0	1.0	1.0	1.0	1.0	1.0	1.0	1.0	1.0
785	1047	1579	5.20	5.80	1.11	9.8	11.3	13.3	15.3	18.3	20.3	22.3	23.3	24.8	26.3	27.3	29.8	31.3	32.3	34.8	37.3	39.8	42.3	44.8	48.3
						0.8	0.8	0.9	0.9	0.9	0.9	0.9	0.9	0.9	0.9	0.9	1.0	1.0	1.0	1.0	1.0	1.0	1.0	1.0	1.0
782	1043	1574	5.00	5.60	1.11	10.1	11.6	13.6	15.6	18.6	20.6	22.6	23.6	25.1	26.6	27.6	30.1	31.6	32.6	35.1	37.6	40.1	42.6	45.1	48.6
						0.8	0.8	0.9	0.9	0.9	0.9	0.9	0.9	0.9	0.9	0.9	1.0	1.0	1.0	1.0	1.0	1.0	1.0	1.0	1.0
780	1040	1569	6.60	7.40	1.12	—	8.9	10.9	12.9	15.9	17.9	19.9	20.9	22.4	23.9	24.9	27.4	28.9	29.9	32.4	34.9	37.4	39.9	42.4	45.9
						—	0.8	0.9	0.9	0.9	0.9	0.9	0.9	0.9	0.9	0.9	1.0	1.0	1.0	1.0	1.0	1.0	1.0	1.0	1.0
779	1039	1567	4.80	5.40	1.12	10.4	11.9	13.9	15.9	18.9	20.9	22.9	23.9	25.4	26.9	27.9	30.4	31.9	32.9	35.4	37.9	40.4	42.9	45.4	48.9
			*			0.8	0.8	0.9	0.9	0.9	0.9	0.9	0.9	0.9	0.9	0.9	1.0	1.0	1.0	1.0	1.0	1.0	1.0	1.0	1.0
776	1035	1561	4.60	5.20	1.12	10.7	12.2	14.2	16.2	19.2	21.2	23.2	24.2	25.7	27.2	28.2	30.7	32.2	33.2	35.7	38.2	40.7	43.2	45.7	49.2
			*			0.8	0.8	0.9	0.9	0.9	0.9	0.9	0.9	0.9	0.9	0.9	1.0	1.0	1.0	1.0	1.0	1.0	1.0	1.0	1.0
775	1034	1560	6.20	7.00	1.12	—	9.5	11.5	13.5	16.5	18.5	20.5	21.5	23.0	24.5	25.5	28.0	29.5	30.5	33.0	35.5	38.0	40.5	43.0	46.5
						—	0.8	0.9	0.9	0.9	0.9	0.9	0.9	0.9	0.9	0.9	1.0	1.0	1.0	1.0	1.0	1.0	1.0	1.0	1.0

* Diameters below RMA minimum for other than Cog-Belt V-belts. Use with Super Blue Ribbon or Aramax V-belts will result in reduced life and loss of efficiency.

CLASSICAL SECTION PRE-ENGINEERED DRIVE SELECTION TABLES

B, BP, BK, BX PRE-ENGINEERED TABLES — RATIO 1.05 - 1.12

V-Belt Number and Center Distance (Other sizes may be available, see page 216)															Sheave Datum Diameters		Rated HP per Belt (Includes Added HP for Speed Ratio)								
																	Super Blue Ribbon & Aramax BP & BK RPM of Small Sheave			Super II (B) RPM of Small Sheave			Gold Label Cog-Belt (BX) RPM of Small Sheave		
B 120	B 128	B 136	B 144	B 154	B 158	B 173	B 180	B 195	B 210	B 225	B 240	B 255	B 270	B 300	Small Sheave	Large Sheave	870 RPM	1160 RPM	1750 RPM	870 RPM	1160 RPM	1750 RPM	870 RPM	1160 RPM	1750 RPM
49.6	53.6	57.6	61.6	66.6	68.6	76.1	79.6	87.1	94.6	101.3	108.8	116.3	123.8	138.8	7.00	7.40	6.88	8.60	11.44	7.14	8.93	11.91	7.52	9.39	12.53
1.0	1.1	1.1	1.1	1.1	1.1	1.1	1.1	1.1	1.1	1.2	1.2	1.2	1.2	1.2											
50.2	54.2	58.2	62.2	67.2	69.2	76.7	80.2	87.7	95.2	102.0	109.5	117.0	124.5	139.5	6.60	7.00	6.32	7.89	10.51	6.62	8.28	11.08	7.06	8.82	11.81
1.0	1.1	1.1	1.1	1.1	1.1	1.1	1.1	1.1	1.1	1.2	1.2	1.2	1.2	1.2											
50.5	54.5	58.5	62.5	67.5	69.5	77.0	80.5	88.0	95.5	102.3	109.8	117.3	124.8	139.8	6.40	6.80	6.03	7.53	10.03	6.36	7.95	10.65	6.83	8.53	11.44
1.0	1.1	1.1	1.1	1.1	1.1	1.1	1.1	1.1	1.1	1.2	1.2	1.2	1.2	1.2											
50.8	54.8	58.8	62.8	67.8	69.8	77.3	80.8	88.3	95.8	102.6	110.1	117.6	125.1	140.1	6.20	6.60	5.74	7.17	9.55	6.10	7.62	10.21	6.60	8.24	11.07
1.0	1.1	1.1	1.1	1.1	1.1	1.1	1.1	1.1	1.1	1.2	1.2	1.2	1.2	1.2											
51.2	55.2	59.2	63.2	68.2	70.2	77.7	81.2	88.7	96.2	102.9	110.4	117.9	125.4	140.4	6.00	6.40	5.46	6.80	9.06	5.83	7.29	9.78	6.36	7.95	10.69
1.0	1.1	1.1	1.1	1.1	1.1	1.1	1.1	1.1	1.1	1.2	1.2	1.2	1.2	1.2											
51.5	55.5	59.5	63.5	68.5	70.5	78.0	81.5	89.0	96.5	103.2	110.7	118.2	125.7	140.7	5.80	6.20	5.17	6.44	8.57	5.57	6.96	9.33	6.13	7.66	10.31
1.0	1.1	1.1	1.1	1.1	1.1	1.1	1.1	1.1	1.1	1.2	1.2	1.2	1.2	1.2											
51.8	55.8	59.8	63.8	68.8	70.8	78.3	81.8	89.3	96.8	103.5	111.0	118.5	126.0	141.0	5.60	6.00	4.88	6.07	8.07	5.30	6.62	8.88	5.89	7.36	9.92
1.0	1.1	1.1	1.1	1.1	1.1	1.1	1.1	1.1	1.1	1.2	1.2	1.2	1.2	1.2											
52.1	56.1	60.1	64.1	69.1	71.1	78.6	82.1	89.6	97.1	103.9	111.4	118.9	126.4	141.4	5.40	5.80	4.58	5.70	7.57	5.03	6.28	8.43	5.65	7.06	9.52
1.0	1.1	1.1	1.1	1.1	1.1	1.1	1.1	1.1	1.1	1.2	1.2	1.2	1.2	1.2											
47.9	51.9	55.9	59.9	64.9	66.9	74.4	77.9	85.4	92.9	99.6	107.1	114.6	122.1	137.1	8.00	8.60	8.32	10.39	13.74	8.45	10.56	13.98	8.68	10.81	14.30
1.0	1.1	1.1	1.1	1.1	1.1	1.1	1.1	1.1	1.1	1.2	1.2	1.2	1.2	1.2											
52.4	56.4	60.4	64.4	69.4	71.4	78.9	82.4	89.9	97.4	104.2	111.7	119.2	126.7	141.7	5.20	5.60	4.29	5.33	7.06	4.76	5.94	7.96	5.41	6.76	9.12
1.0	1.1	1.1	1.1	1.1	1.1	1.1	1.1	1.1	1.1	1.2	1.2	1.2	1.2	1.2	*										
52.7	56.7	60.7	64.7	69.7	71.7	79.2	82.7	90.2	97.7	104.5	112.0	119.5	127.0	142.0	5.00	5.40	3.99	4.95	6.55	4.49	5.60	7.50	5.17	6.46	8.72
1.0	1.1	1.1	1.1	1.1	1.1	1.1	1.1	1.1	1.1	1.2	1.2	1.2	1.2	1.2	*										
48.8	52.8	56.8	60.8	65.8	67.8	75.3	78.8	86.3	93.8	100.6	108.1	115.6	123.1	138.1	7.40	8.00	7.48	9.35	12.43	7.69	9.62	12.80	8.01	9.99	13.30
1.0	1.1	1.1	1.1	1.1	1.1	1.1	1.1	1.1	1.1	1.2	1.2	1.2	1.2	1.2											
53.0	57.0	61.0	65.0	70.0	72.0	79.5	83.0	90.5	98.0	104.8	112.3	119.8	127.3	142.3	4.80	5.20	3.70	4.57	6.03	4.22	5.25	7.03	4.92	6.15	8.31
1.0	1.1	1.1	1.1	1.1	1.1	1.1	1.1	1.1	1.1	1.2	1.2	1.2	1.2	1.2	*										
53.4	57.4	61.4	65.4	70.4	72.4	79.9	83.4	90.9	98.4	105.1	112.6	120.1	127.6	142.6	4.60	5.00	3.40	4.19	5.50	3.94	4.90	6.55	4.68	5.84	7.89
1.0	1.1	1.1	1.1	1.1	1.1	1.1	1.1	1.1	1.1	1.2	1.2	1.2	1.2	1.2	*										
49.7	53.7	57.7	61.7	66.7	68.7	76.2	79.7	87.2	94.7	101.5	109.0	116.5	124.0	139.0	6.80	7.40	6.64	8.30	11.06	6.92	8.66	11.58	7.33	9.16	12.25
1.0	1.1	1.1	1.1	1.1	1.1	1.1	1.1	1.1	1.1	1.2	1.2	1.2	1.2	1.2											
50.4	54.4	58.4	62.4	67.4	69.4	76.9	80.4	87.9	95.4	102.1	109.6	117.1	124.6	139.6	6.40	7.00	6.07	7.58	10.12	6.40	8.01	10.73	6.87	8.59	11.52
1.0	1.1	1.1	1.1	1.1	1.1	1.1	1.1	1.1	1.1	1.2	1.2	1.2	1.2	1.2											
46.8	50.8	54.8	58.8	63.8	65.8	73.3	76.8	84.3	91.8	98.5	106.0	113.5	121.0	136.0	8.60	9.40	9.17	11.44	15.06	9.23	11.51	15.15	9.37	11.64	15.30
1.0	1.1	1.1	1.1	1.1	1.1	1.1	1.1	1.1	1.1	1.2	1.2	1.2	1.2	1.2											
50.7	54.7	58.7	62.7	67.7	69.7	77.2	80.7	88.2	95.7	102.4	109.9	117.4	124.9	139.9	6.20	6.80	5.79	7.22	9.64	6.14	7.68	10.30	6.64	8.30	11.15
1.0	1.1	1.1	1.1	1.1	1.1	1.1	1.1	1.1	1.1	1.2	1.2	1.2	1.2	1.2											
51.0	55.0	59.0	63.0	68.0	70.0	77.5	81.0	88.5	96.0	102.8	110.3	117.8	125.3	140.3	6.00	6.60	5.50	6.86	9.15	5.88	7.35	9.86	6.41	8.01	10.78
1.0	1.1	1.1	1.1	1.1	1.1	1.1	1.1	1.1	1.1	1.2	1.2	1.2	1.2	1.2											
51.3	55.3	59.3	63.3	68.3	70.3	77.8	81.3	88.8	96.3	103.1	110.6	118.1	125.6	140.6	5.80	6.40	5.21	6.50	8.66	5.61	7.02	9.42	6.17	7.72	10.39
1.0	1.1	1.1	1.1	1.1	1.1	1.1	1.1	1.1	1.1	1.2	1.2	1.2	1.2	1.2											
51.6	55.6	59.6	63.6	68.6	70.6	78.1	81.6	89.1	96.6	103.4	110.9	118.4	125.9	140.9	5.60	6.20	4.92	6.13	8.16	5.34	6.68	8.97	5.93	7.42	10.01
1.0	1.1	1.1	1.1	1.1	1.1	1.1	1.1	1.1	1.1	1.2	1.2	1.2	1.2	1.2											
51.9	55.9	59.9	63.9	68.9	70.9	78.4	81.9	89.4	96.9	103.7	111.2	118.7	126.2	141.2	5.40	6.00	4.63	5.76	7.66	5.08	6.34	8.52	5.70	7.12	9.61
1.0	1.1	1.1	1.1	1.1	1.1	1.1	1.1	1.1	1.1	1.2	1.2	1.2	1.2	1.2											
52.3	56.3	60.3	64.3	69.3	71.3	78.8	82.3	89.8	97.3	104.0	111.5	119.0	126.5	141.5	5.20	5.80	4.33	5.39	7.15	4.81	6.00	8.06	5.46	6.82	9.22
1.0	1.1	1.1	1.1	1.1	1.1	1.1	1.1	1.1	1.1	1.2	1.2	1.2	1.2	1.2											
52.6	56.6	60.6	64.6	69.6	71.6	79.1	82.6	90.1	97.6	104.3	111.8	119.3	126.8	141.8	5.00	5.60	4.04	5.01	6.64	4.54	5.66	7.59	5.21	6.52	8.81
1.0	1.1	1.1	1.1	1.1	1.1	1.1	1.1	1.1	1.1	1.2	1.2	1.2	1.2	1.2											
49.9	53.9	57.9	61.9	66.9	68.9	76.4	79.9	87.4	94.9	101.7	109.2	116.7	124.2	139.2	6.60	7.40	6.39	7.99	10.66	6.70	8.38	11.23	7.14	8.92	11.96
1.0	1.1	1.1	1.1	1.1	1.1	1.1	1.1	1.1	1.1	1.2	1.2	1.2	1.2	1.2											
52.9	56.9	60.9	64.9	69.9	71.9	79.4	82.9	90.4	97.9	104.6	112.1	119.6	127.1	142.1	4.80	5.40	3.75	4.64	6.12	4.27	5.32	7.12	4.97	6.22	8.40
1.0	1.1	1.1	1.1	1.1	1.1	1.1	1.1	1.1	1.1	1.2	1.2	1.2	1.2	1.2	*										
53.2	57.2	61.2	65.2	70.2	72.2	79.7	83.2	90.7	98.2	105.0	112.5	120.0	127.5	142.5	4.60	5.20	3.45	4.26	5.60	3.99	4.97	6.65	4.73	5.91	7.99
1.0	1.1	1.1	1.1	1.1	1.1	1.1	1.1	1.1	1.1	1.2	1.2	1.2	1.2	1.2	*										
50.5	54.5	58.5	62.5	67.5	69.5	77.0	80.5	88.0	95.5	102.3	109.8	117.3	124.8	139.8	6.20	7.00	5.82	7.27	9.71	6.17	7.73	10.37	6.68	8.35	11.22
1.0	1.1	1.1	1.1	1.1	1.1	1.1	1.1	1.1	1.1	1.2	1.2	1.2	1.2	1.2											

* Diameters below RMA minimum for other than Cog-Belt V-belts. Use with Super Blue Ribbon or Aramax V-belts will result in reduced life and loss of efficiency.

CLASSICAL SECTION PRE-ENGINEERED DRIVE SELECTION TABLES

B, BP, BK, BX PRE-ENGINEERED TABLES RATIO 1.13 - 1.21

Driven Speed for Motor Speed of			Sheave Datum Diameters		V-Belt Number and Center Distance (other sizes may be available, see page 216)																					
870 RPM	1160 RPM	1750 RPM	Small Sheave	Large Sheave	Speed Ratio	B 35	B 38	B 42	B 46	B 52	B 56	B 60	B 62	B 65	B 68	B 70	B 75	B 78	B 80	B 85	B 90	B 95	B 100	B 105	B 112
773	1030	1554	6.00	6.80	1.13	8.3	9.8	11.8	13.8	16.8	18.8	20.8	21.8	23.3	24.8	25.8	28.3	29.8	30.8	33.3	35.8	38.3	40.8	43.3	46.8
						0.8	0.8	0.9	0.9	0.9	0.9	0.9	0.9	0.9	0.9	0.9	1.0	1.0	1.0	1.0	1.0	1.0	1.0	1.0	1.0
770	1026	1549	5.80	6.60	1.13	8.7	10.2	12.2	14.2	17.2	19.2	21.2	22.2	23.7	25.2	26.2	28.7	30.2	31.2	33.7	36.2	38.7	41.2	43.7	47.2
						0.8	0.8	0.9	0.9	0.9	0.9	0.9	0.9	0.9	0.9	0.9	1.0	1.0	1.0	1.0	1.0	1.0	1.0	1.0	1.0
767	1023	1543	5.60	6.40	1.13	9.0	10.5	12.5	14.5	17.5	19.5	21.5	22.5	24.0	25.5	26.5	29.0	30.5	31.5	34.0	36.5	39.0	41.5	44.0	47.5
						0.8	0.8	0.9	0.9	0.9	0.9	0.9	0.9	0.9	0.9	0.9	1.0	1.0	1.0	1.0	1.0	1.0	1.0	1.0	1.0
766	1021	1540	7.00	8.00	1.14	—	—	10.1	12.1	15.1	17.1	19.1	20.1	21.6	23.1	24.1	26.6	28.1	29.1	31.6	34.1	36.6	39.1	41.6	45.1
						—	—	0.9	0.9	0.9	0.9	0.9	0.9	0.9	0.9	0.9	1.0	1.0	1.0	1.0	1.0	1.0	1.0	1.0	1.0
764	1018	1536	5.40	6.20	1.14	9.3	10.8	12.8	14.8	17.8	19.8	21.8	22.8	24.3	25.8	26.8	29.3	30.8	31.8	34.3	36.8	39.3	41.8	44.3	47.8
						0.8	0.8	0.9	0.9	0.9	0.9	0.9	0.9	0.9	0.9	0.9	1.0	1.0	1.0	1.0	1.0	1.0	1.0	1.0	1.0
760	1014	1530	5.20	6.00	1.14	9.6	11.1	13.1	15.1	18.1	20.1	22.1	23.1	24.6	26.1	27.1	29.6	31.1	32.1	34.6	37.1	39.6	42.1	44.6	48.1
			*			0.8	0.8	0.9	0.9	0.9	0.9	0.9	0.9	0.9	0.9	0.9	1.0	1.0	1.0	1.0	1.0	1.0	1.0	1.0	1.0
758	1010	1524	6.40	7.40	1.15	—	9.0	11.1	13.1	16.1	18.1	20.1	21.1	22.6	24.1	25.1	27.6	29.1	30.1	32.6	35.1	37.6	40.1	42.6	46.1
						—	0.8	0.9	0.9	0.9	0.9	0.9	0.9	0.9	0.9	0.9	1.0	1.0	1.0	1.0	1.0	1.0	1.0	1.0	1.0
757	1009	1522	5.00	5.80	1.15	9.9	11.4	13.4	15.4	18.4	20.4	22.4	23.4	24.9	26.4	27.4	29.9	31.4	32.4	34.9	37.4	39.9	42.4	44.9	48.4
			*			0.8	0.8	0.9	0.9	0.9	0.9	0.9	0.9	0.9	0.9	0.9	1.0	1.0	1.0	1.0	1.0	1.0	1.0	1.0	1.0
753	1004	1515	7.40	8.60	1.15	—	—	—	11.3	14.3	16.3	18.3	19.3	20.8	22.3	23.3	25.8	27.3	28.3	30.8	33.3	35.8	38.3	40.8	44.3
						—	—	—	0.9	0.9	0.9	0.9	0.9	0.9	0.9	0.9	1.0	1.0	1.0	1.0	1.0	1.0	1.0	1.0	1.0
753	1004	1515	4.80	5.60	1.16	10.2	11.7	13.7	15.7	18.7	20.7	22.7	23.7	25.2	26.7	27.7	30.2	31.7	32.7	35.2	37.7	40.2	42.7	45.2	48.7
			*			0.8	0.8	0.9	0.9	0.9	0.9	0.9	0.9	0.9	0.9	0.9	1.0	1.0	1.0	1.0	1.0	1.0	1.0	1.0	1.0
752	1002	1512	6.00	7.00	1.16	8.2	9.7	11.7	13.7	16.7	18.7	20.7	21.7	23.2	24.7	25.7	28.2	29.7	30.7	33.2	35.7	38.2	40.7	43.2	46.7
						0.8	0.8	0.9	0.9	0.9	0.9	0.9	0.9	0.9	0.9	0.9	1.0	1.0	1.0	1.0	1.0	1.0	1.0	1.0	1.0
749	999	1507	4.60	5.40	1.16	10.5	12.0	14.0	16.0	19.0	21.0	23.0	24.0	25.5	27.0	28.0	30.5	32.0	33.0	35.5	38.0	40.5	43.0	45.5	49.0
			*			0.8	0.8	0.9	0.9	0.9	0.9	0.9	0.9	0.9	0.9	0.9	1.0	1.0	1.0	1.0	1.0	1.0	1.0	1.0	1.0
748	998	1505	5.80	6.80	1.16	8.5	10.0	12.0	14.0	17.0	19.0	21.0	22.0	23.5	25.0	26.0	28.5	30.0	31.0	33.5	36.0	38.5	41.0	43.5	47.0
						0.8	0.8	0.9	0.9	0.9	0.9	0.9	0.9	0.9	0.9	0.9	1.0	1.0	1.0	1.0	1.0	1.0	1.0	1.0	1.0
747	996	1503	9.40	11.00	1.16	—	—	—	—	—	12.9	14.9	15.9	17.4	18.9	19.9	22.4	23.9	24.9	27.4	29.9	32.4	34.9	37.4	40.9
						—	—	—	—	—	0.9	0.9	0.9	0.9	0.9	0.9	1.0	1.0	1.0	1.0	1.0	1.0	1.0	1.0	1.0
745	993	1499	8.00	9.40	1.17	—	—	—	1.02	13.2	15.2	17.2	18.2	19.7	21.2	22.2	24.7	26.2	27.2	29.7	32.2	34.7	37.2	39.7	43.2
						—	—	—	0.9	0.9	0.9	0.9	0.9	0.9	0.9	0.9	1.0	1.0	1.0	1.0	1.0	1.0	1.0	1.0	1.0
745	993	1499	6.80	8.00	1.17	—	—	10.3	12.3	15.3	17.3	19.3	20.3	21.8	23.3	24.3	26.8	28.3	29.3	31.8	34.3	36.8	39.3	41.8	45.3
						—	—	0.8	0.9	0.9	0.9	0.9	0.9	0.9	0.9	0.9	1.0	1.0	1.0	1.0	1.0	1.0	1.0	1.0	1.0
745	993	1498	5.60	6.60	1.17	8.8	10.3	12.3	14.3	17.3	19.3	21.3	22.3	23.8	25.3	26.3	28.8	30.3	31.3	33.8	36.3	38.8	41.3	43.8	47.3
						0.8	0.8	0.9	0.9	0.9	0.9	0.9	0.9	0.9	0.9	0.9	1.0	1.0	1.0	1.0	1.0	1.0	1.0	1.0	1.0
741	988	1491	5.40	6.40	1.17	9.1	10.6	12.6	14.6	17.6	19.6	21.6	22.6	24.1	25.6	26.6	29.1	30.6	31.6	34.1	36.6	39.1	41.6	44.1	47.6
						0.8	0.8	0.9	0.9	0.9	0.9	0.9	0.9	0.9	0.9	0.9	1.0	1.0	1.0	1.0	1.0	1.0	1.0	1.0	1.0
737	983	1483	5.20	6.20	1.18	9.4	10.9	12.9	14.9	17.9	19.9	21.9	22.9	24.4	25.9	26.9	29.4	30.9	31.9	34.4	36.9	39.4	41.9	44.4	47.9
			*			0.8	0.8	0.9	0.9	0.9	0.9	0.9	0.9	0.9	0.9	0.9	1.0	1.0	1.0	1.0	1.0	1.0	1.0	1.0	1.0
735	980	1479	6.20	7.40	1.18	—	9.2	11.2	13.2	16.2	18.2	20.2	21.2	22.7	24.2	25.2	27.7	29.2	30.2	32.7	35.2	37.7	40.2	42.7	46.2
						—	0.8	0.9	0.9	0.9	0.9	0.9	0.9	1.0	1.0	1.0	1.0	1.0	1.0	1.0	1.0	1.0	1.0	1.0	1.0
733	977	1474	5.00	6.00	1.19	9.7	11.2	13.3	15.3	18.3	20.3	22.3	23.3	24.8	26.3	27.3	29.8	31.3	32.3	34.8	37.3	39.8	42.3	44.8	48.3
			*			0.8	0.8	0.9	0.9	0.9	0.9	0.9	0.9	0.9	0.9	0.9	1.0	1.0	1.0	1.0	1.0	1.0	1.0	1.0	1.0
729	971	1465	4.80	5.80	1.19	10.1	11.6	13.6	15.6	18.6	20.6	22.6	23.6	25.1	26.6	27.6	30.1	31.6	32.6	35.1	37.6	40.1	42.6	45.1	48.6
			*			0.8	0.8	0.9	0.9	0.9	0.9	0.9	0.9	0.9	0.9	1.0	1.0	1.0	1.0	1.0	1.0	1.0	1.0	1.0	1.0
728	971	1464	5.80	7.00	1.20	8.3	9.8	11.8	13.8	16.8	18.8	20.8	21.8	23.3	24.8	25.8	28.3	29.8	30.8	33.3	35.8	38.3	40.8	43.3	46.8
						0.8	0.8	0.9	0.9	0.9	0.9	0.9	0.9	0.9	0.9	0.9	1.0	1.0	1.0	1.0	1.0	1.0	1.0	1.0	1.0
724	966	1457	6.60	8.00	1.20	—	—	10.4	12.4	15.4	17.4	19.4	20.4	21.9	23.4	24.4	26.9	28.4	29.4	31.9	34.4	26.9	39.4	41.9	45.4
						—	—	0.8	0.9	0.9	0.9	0.9	0.9	0.9	0.9	0.9	1.0	1.0	1.0	1.0	1.0	1.0	1.0	1.0	1.0
724	965	1456	5.60	6.80	1.20	8.6	10.1	12.1	14.1	17.2	19.2	21.2	22.2	23.7	25.2	26.2	28.7	30.2	31.2	33.7	36.2	38.7	41.2	43.7	47.2
						0.8	0.8	0.9	0.9	0.9	0.9	0.9	0.9	0.9	0.9	0.9	1.0	1.0	1.0	1.0	1.0	1.0	1.0	1.0	1.0
724	965	1456	4.60	5.60	1.20	10.4	11.9	13.9	15.9	18.9	20.9	22.9	23.9	25.4	26.9	27.9	30.4	31.9	32.9	35.4	37.9	40.4	42.9	45.4	48.9
			*			0.8	0.8	0.9	0.9	0.9	0.9	0.9	0.9	0.9	0.9	0.9	1.0	1.0	1.0	1.0	1.0	1.0	1.0	1.0	1.0
720	960	1448	5.40	6.60	1.21	9.0	10.5	12.5	14.5	17.5	19.5	21.5	22.5	24.0	25.5	26.5	29.0	30.5	31.5	34.0	36.5	39.0	41.5	44.0	47.5
						0.8	0.8	0.9	0.9	0.9	0.9	0.9	0.9	0.9	0.9	0.9	1.0	1.0	1.0	1.0	1.0	1.0	1.0	1.0	1.0

* Diameters below RMA minimum for other than Cog-Belt V-belts. Use with Super Blue Ribbon or Aramax V-belts will result in reduced life and loss of efficiency.

CLASSICAL SECTION PRE-ENGINEERED DRIVE SELECTION TABLES

B, BP, BK, BX PRE-ENGINEERED TABLES — RATIO 1.13 - 1.21

V-Belt Number and Center Distance (Other sizes may be available, see page 216)															Sheave Datum Diameters		Rated HP per Belt (Includes Added HP for Speed Ratio)								
																	Super Blue Ribbon & Aramax BP & BK RPM of Small Sheave			Super II (B) RPM of Small Sheave			Gold Label Cog-Belt (BX) RPM of Small Sheave		
B 120	B 128	B 136	B 144	B 154	B 158	B 173	B 180	B 195	B 210	B 225	B 240	B 255	B 270	B 300	Small Sheave	Large Sheave	870 RPM	1160 RPM	1750 RPM	870 RPM	1160 RPM	1750 RPM	870 RPM	1160 RPM	1750 RPM
50.8	54.8	58.8	62.8	67.8	69.8	77.3	80.8	88.3	95.8	102.6	110.1	117.6	125.1	140.1	6.00	6.80	5.53	6.91	9.22	5.91	7.40	9.93	6.44	8.06	10.85
1.0	1.1	1.1	1.1	1.1	1.1	1.1	1.1	1.1	1.1	1.2	1.2	1.2	1.2	1.2											
51.2	55.2	59.2	63.2	68.2	70.2	77.7	81.2	88.7	96.2	102.9	110.4	117.9	125.4	140.4	5.80	6.60	5.25	6.55	8.73	5.65	7.06	9.49	6.21	7.76	10.47
1.0	1.1	1.1	1.1	1.1	1.1	1.1	1.1	1.1	1.1	1.2	1.2	1.2	1.2	1.2											
51.5	55.5	59.5	63.5	68.5	70.5	78.0	81.5	89.0	96.5	103.2	110.7	118.2	125.7	140.7	5.60	6.40	4.96	6.18	8.24	5.38	6.73	9.05	5.97	7.47	10.08
1.0	1.1	1.1	1.1	1.1	1.1	1.1	1.1	1.1	1.1	1.2	1.2	1.2	1.2	1.2											
49.1	53.1	57.1	61.1	66.1	68.1	75.6	79.1	86.6	94.1	100.9	108.4	115.9	123.4	138.4	7.00	8.00	6.99	8.74	11.65	7.24	9.07	12.12	7.62	9.52	12.73
1.0	1.1	1.1	1.1	1.1	1.1	1.1	1.1	1.1	1.1	1.2	1.2	1.2	1.2	1.2											
51.8	55.8	59.8	63.8	68.8	70.8	78.3	81.8	89.3	96.8	103.5	111.0	118.5	126.0	141.0	5.40	6.20	4.67	5.81	7.74	5.11	6.39	8.59	5.73	7.17	9.69
1.0	1.1	1.1	1.1	1.1	1.1	1.1	1.1	1.1	1.1	1.2	1.2	1.2	1.2	1.2											
52.1	56.1	60.1	64.1	69.1	71.1	78.6	82.1	89.6	97.1	103.9	111.4	118.9	126.4	141.4	5.20	6.00	4.37	5.44	7.23	4.85	6.05	8.13	5.49	6.87	9.29
1.0	1.1	1.1	1.1	1.1	1.1	1.1	1.1	1.1	1.1	1.2	1.2	1.2	1.2	1.2	*										
50.1	54.1	58.1	62.1	67.1	69.1	76.6	80.1	87.6	95.1	101.8	109.3	116.8	124.3	139.3	6.40	7.40	6.14	7.67	10.25	6.47	8.10	10.86	6.94	8.67	11.66
1.0	1.1	1.1	1.1	1.1	1.1	1.1	1.1	1.1	1.1	1.2	1.2	1.2	1.2	1.2											
52.4	56.4	60.4	64.4	69.4	71.4	78.9	82.4	89.9	97.4	104.2	111.7	119.2	126.7	141.7	5.00	5.80	4.08	5.06	6.72	4.58	5.71	7.67	5.25	6.57	8.89
1.0	1.1	1.1	1.1	1.1	1.1	1.1	1.1	1.1	1.1	1.2	1.2	1.2	1.2	1.2	*										
48.3	52.3	56.3	60.3	65.3	67.3	74.8	78.3	85.8	93.3	100.1	107.6	115.1	122.6	137.6	7.40	8.60	7.57	9.47	12.60	7.78	9.73	12.98	8.10	10.11	13.48
1.0	1.1	1.1	1.1	1.1	1.1	1.1	1.1	1.1	1.1	1.2	1.2	1.2	1.2	1.2											
52.7	56.7	60.7	64.7	69.7	71.7	79.2	82.7	90.2	97.7	104.5	112.0	119.5	127.0	142.0	4.80	5.60	3.79	4.69	6.20	4.30	5.37	7.20	5.01	6.27	8.48
1.0	1.1	1.1	1.1	1.1	1.1	1.1	1.1	1.1	1.1	1.2	1.2	1.2	1.2	1.2	*										
50.7	54.7	58.7	62.7	67.7	69.7	77.2	80.7	88.2	95.7	102.4	109.9	117.4	124.9	139.9	6.00	7.00	5.57	6.95	9.29	5.94	7.44	10.00	6.47	8.10	10.91
1.0	1.1	1.1	1.1	1.1	1.1	1.1	1.1	1.1	1.1	1.2	1.2	1.2	1.2	1.2											
53.0	57.0	61.0	65.0	70.0	72.0	79.5	83.0	90.5	98.0	104.8	112.3	119.8	127.3	142.3	4.60	5.40	3.49	4.31	5.68	4.03	5.02	6.73	4.77	5.96	8.07
1.0	1.1	1.1	1.1	1.1	1.1	1.1	1.1	1.1	1.1	1.2	1.2	1.2	1.2	1.2	*										
51.0	55.0	59.0	63.0	68.0	70.0	77.5	81.0	88.5	96.0	102.8	110.3	117.8	125.3	140.3	5.80	6.80	5.28	6.59	8.80	5.68	7.11	9.56	6.24	7.81	10.53
1.0	1.1	1.1	1.1	1.1	1.1	1.1	1.1	1.1	1.1	1.2	1.2	1.2	1.2	1.2											
44.9	48.9	52.9	56.9	61.9	63.9	71.4	74.9	82.4	89.9	96.6	104.1	111.6	119.1	134.1	9.40	11.00	10.33	12.88	16.81	10.30	12.82	16.72	10.31	12.79	16.66
1.0	1.1	1.1	1.1	1.1	1.1	1.1	1.1	1.1	1.1	1.2	1.2	1.2	1.2	1.2											
47.2	51.2	55.2	59.2	64.2	66.2	73.7	77.2	84.7	92.2	99.0	106.5	114.0	121.5	136.5	8.00	9.40	8.42	10.53	13.96	8.56	10.70	14.19	8.79	10.95	14.51
1.0	1.1	1.1	1.1	1.1	1.1	1.1	1.1	1.1	1.1	1.2	1.2	1.2	1.2	1.2											
49.3	53.3	57.3	61.3	66.3	68.3	75.8	79.3	86.8	94.3	101.0	108.5	116.0	123.5	138.5	6.80	8.00	6.73	8.42	11.24	7.01	8.78	11.76	7.42	9.28	12.43
1.0	1.1	1.1	1.1	1.1	1.1	1.1	1.1	1.1	1.1	1.2	1.2	1.2	1.2	1.2											
51.3	55.3	59.3	63.3	68.3	70.3	77.8	81.3	88.8	96.3	103.1	110.6	118.1	125.6	140.6	5.60	6.60	4.99	6.22	8.30	5.41	6.77	9.11	6.00	7.51	10.15
1.0	1.1	1.1	1.1	1.1	1.1	1.1	1.1	1.1	1.1	1.2	1.2	1.2	1.2	1.2											
51.6	55.6	59.6	63.6	68.6	70.6	78.1	81.6	89.1	96.6	103.4	110.9	118.4	125.9	140.9	5.40	6.40	4.70	5.85	7.80	5.15	6.44	8.66	5.77	7.22	9.75
1.0	1.1	1.1	1.1	1.1	1.1	1.1	1.1	1.1	1.1	1.2	1.2	1.2	1.2	1.2											
51.9	55.9	59.9	63.9	68.9	70.9	78.4	81.9	89.4	96.9	103.7	111.2	118.7	126.2	141.2	5.20	6.20	4.41	5.48	7.30	4.88	6.10	8.20	5.53	6.92	9.36
1.0	1.1	1.1	1.1	1.1	1.1	1.1	1.1	1.1	1.1	1.2	1.2	1.2	1.2	1.2	*										
50.2	54.2	58.2	62.2	67.2	69.2	76.7	80.2	87.7	95.2	102.0	109.5	117.0	124.5	139.5	6.20	7.40	5.88	7.35	9.82	6.23	7.80	10.49	6.73	8.42	11.34
1.0	1.1	1.1	1.1	1.1	1.1	1.1	1.1	1.1	1.1	1.2	1.2	1.2	1.2	1.2											
52.3	56.3	60.3	64.3	69.3	71.3	78.8	82.3	89.8	97.3	104.0	111.5	119.0	126.5	141.5	5.00	6.00	4.11	5.11	6.78	4.61	5.76	7.74	5.29	6.62	8.96
1.0	1.1	1.1	1.1	1.1	1.1	1.1	1.1	1.1	1.1	1.2	1.2	1.2	1.2	1.2	*										
52.6	56.6	60.6	64.6	69.6	71.6	79.1	82.6	90.1	97.6	104.3	111.8	119.3	126.8	141.8	4.80	5.80	3.82	4.73	6.27	4.34	5.41	7.27	5.04	6.31	8.55
1.0	1.1	1.1	1.1	1.1	1.1	1.1	1.1	1.1	1.1	1.2	1.2	1.2	1.2	1.2	*										
50.8	54.8	58.8	62.8	67.8	69.8	77.3	80.8	88.3	95.8	102.6	110.1	117.6	125.1	140.1	5.80	7.00	5.30	6.62	8.85	5.71	7.14	9.61	6.27	7.84	10.59
1.0	1.1	1.1	1.1	1.1	1.1	1.1	1.1	1.1	1.1	1.2	1.2	1.2	1.2	1.2											
49.4	53.4	57.4	61.4	66.4	68.4	75.9	79.4	86.9	94.4	101.2	108.7	116.2	123.7	138.7	6.60	8.00	6.47	8.10	10.82	6.78	8.49	11.39	7.22	9.02	12.12
1.0	1.1	1.1	1.1	1.1	1.1	1.1	1.1	1.1	1.1	1.2	1.2	1.2	1.2	1.2											
51.2	55.2	59.2	63.2	68.2	70.2	77.7	81.2	88.7	96.2	102.9	110.4	117.9	125.4	140.4	5.60	6.80	5.02	6.26	8.36	5.44	6.81	9.16	6.03	7.55	10.20
1.0	1.1	1.1	1.1	1.1	1.1	1.1	1.1	1.1	1.1	1.2	1.2	1.2	1.2	1.2											
52.9	56.9	60.9	64.9	69.9	71.9	79.4	82.9	90.4	97.9	104.6	112.1	119.6	127.1	142.1	4.60	5.60	3.52	4.36	5.75	4.07	5.07	6.80	4.80	6.01	8.14
1.0	1.1	1.1	1.1	1.1	1.1	1.1	1.1	1.1	1.1	1.2	1.2	1.2	1.2	1.2	*										
51.5	55.5	59.5	63.5	68.5	70.5	78.0	81.5	89.0	96.5	103.2	110.7	118.2	125.7	140.7	5.40	6.60	4.72	5.89	7.86	5.17	6.47	8.71	5.79	7.25	9.81
1.0	1.1	1.1	1.1	1.1	1.1	1.1	1.1	1.1	1.1	1.2	1.2	1.2	1.2	1.2											

* Diameters below RMA minimum for other than Cog-Belt V-belts. Use with Super Blue Ribbon or Aramax V-belts will result in reduced life and loss of efficiency.

CLASSICAL SECTION PRE-ENGINEERED DRIVE SELECTION TABLES

B, BP, BK, BX PRE-ENGINEERED TABLES RATIO 1.22 - 1.32

Driven Speed for Motor Speed of			Sheave Datum Diameters		V-Belt Number and Center Distance (other sizes may be available, see page 216)																					
870 RPM	1160 RPM	1750 RPM	Small Sheave	Large Sheave	Speed Ratio	B 35	B 38	B 42	B 46	B 52	B 56	B 60	B 62	B 65	B 68	B 70	B 75	B 78	B 80	B 85	B 90	B 95	B 100	B 105	B 112
715	954	1439	5.20	6.40	1.22	9.3	10.8	12.8	14.8	17.8	19.8	21.8	22.8	24.3	25.8	26.8	29.3	30.8	31.8	34.3	36.8	39.3	41.8	44.3	47.8
			*			0.8	0.8	0.9	0.9	0.9	0.9	0.9	0.9	0.9	0.9	0.9	1.0	1.0	1.0	1.0	1.0	1.0	1.0	1.0	1.0
714	953	1437	7.00	8.60	1.22	—	—	9.6	11.6	14.6	16.6	18.6	19.6	21.1	22.6	23.6	26.1	27.6	28.6	31.1	33.6	36.1	38.6	41.1	44.6
						—	—	0.8	0.9	0.9	0.9	0.9	0.9	0.9	0.9	0.9	1.0	1.0	1.0	1.0	1.0	1.0	1.0	1.0	1.0
713	950	1434	6.00	7.40	1.22	—	9.3	11.4	13.4	16.4	18.4	20.4	21.4	22.9	24.4	25.4	27.9	29.4	30.4	32.9	35.4	37.9	40.4	42.9	46.4
						—	0.8	0.8	0.9	0.9	0.9	0.9	0.9	0.9	0.9	0.9	1.0	1.0	1.0	1.0	1.0	1.0	1.0	1.0	1.0
711	947	1429	5.00	6.20	1.22	9.6	11.1	13.1	15.1	18.1	20.1	22.1	23.1	24.6	26.1	27.1	29.6	31.1	32.1	34.6	37.1	39.6	42.1	44.6	48.1
			*			0.8	0.8	0.9	0.9	0.9	0.9	0.9	0.9	0.9	0.9	0.9	1.0	1.0	1.0	1.0	1.0	1.0	1.0	1.0	1.0
706	941	1419	4.80	6.00	1.23	9.9	11.4	13.4	15.4	18.4	20.4	22.4	23.4	24.9	26.4	27.4	29.9	31.4	32.4	34.9	37.4	39.9	42.4	44.9	48.4
			*			0.8	0.8	0.9	0.9	0.9	0.9	0.9	0.9	0.9	0.9	0.9	1.0	1.0	1.0	1.0	1.0	1.0	1.0	1.0	1.0
704	939	1417	5.60	7.00	1.24	8.5	10.0	12.0	14.0	17.0	19.0	21.0	22.0	23.5	25.0	26.0	28.5	30.0	31.0	33.5	36.0	38.5	41.0	43.5	47.0
						0.8	0.8	0.8	0.9	0.9	0.9	0.9	0.9	0.9	0.9	0.9	1.0	1.0	1.0	1.0	1.0	1.0	1.0	1.0	1.0
703	938	1415	6.40	8.00	1.24	—	—	10.6	12.6	15.6	17.6	19.6	20.6	22.1	23.6	24.6	27.1	28.6	29.6	32.1	34.6	37.1	39.6	42.1	45.6
						—	—	0.8	0.9	0.9	0.9	0.9	0.9	0.9	0.9	0.9	1.0	1.0	1.0	1.0	1.0	1.0	1.0	1.0	1.0
700	934	1409	4.60	5.80	1.24	10.2	11.7	13.7	15.7	18.7	20.7	22.7	23.7	25.2	26.7	27.7	30.2	31.7	32.7	35.2	37.7	40.2	42.7	45.2	48.7
			*			0.8	0.8	0.9	0.9	0.9	0.9	0.9	0.9	0.9	0.9	0.9	1.0	1.0	1.0	1.0	1.0	1.0	1.0	1.0	1.0
700	933	1407	5.40	6.80	1.24	8.8	10.3	12.3	14.3	17.3	19.3	21.3	22.3	23.8	25.3	26.3	28.8	60.3	31.3	33.8	36.3	38.8	41.3	43.8	47.3
						0.8	0.8	0.9	0.9	0.9	0.9	0.9	0.9	0.9	0.9	0.9	1.0	1.0	1.0	1.0	1.0	1.0	1.0	1.0	1.0
695	927	1398	6.80	8.60	1.25	—	—	9.8	11.8	14.8	16.8	18.8	19.8	21.3	22.8	23.8	26.3	27.8	28.8	31.3	33.8	36.3	38.8	41.3	44.8
						—	—	0.8	0.9	0.9	0.9	0.9	0.9	0.9	0.9	0.9	1.0	1.0	1.0	1.0	1.0	1.0	1.0	1.0	1.0
695	926	1397	5.20	6.60	1.25	9.1	10.6	12.6	14.6	17.6	19.6	21.6	22.6	24.1	25.6	26.6	29.1	30.6	31.6	34.1	36.6	39.1	41.6	44.1	47.6
						0.8	0.8	0.9	0.9	0.9	0.9	0.9	0.9	0.9	0.9	0.9	1.0	1.0	1.0	1.0	1.0	1.0	1.0	1.0	1.0
692	922	1391	7.40	9.40	1.26	—	—	—	10.7	13.7	15.7	17.7	18.7	20.2	21.7	22.7	25.2	26.7	27.7	30.2	32.7	35.2	37.7	40.2	43.7
						—	—	—	0.9	0.9	0.9	0.9	0.9	0.9	0.9	0.9	1.0	1.0	1.0	1.0	1.0	1.0	1.0	1.0	1.0
690	921	1389	5.80	7.40	1.26	—	9.5	11.5	13.5	16.5	18.5	20.5	21.5	23.0	24.5	25.5	28.0	29.5	30.5	33.0	35.5	38.0	40.5	43.0	46.5
						—	0.8	0.8	0.9	0.9	0.9	0.9	0.9	0.9	0.9	0.9	1.0	1.0	1.0	1.0	1.0	1.0	1.0	1.0	1.0
690	919	1387	5.00	6.40	1.26	9.4	10.9	12.9	14.9	17.9	19.9	21.9	22.9	24.4	25.9	26.9	29.4	30.9	31.9	34.4	36.9	39.4	41.9	44.4	47.9
			*			0.8	0.8	0.9	0.9	0.9	0.9	0.9	0.9	0.9	0.9	0.9	1.0	1.0	1.0	1.0	1.0	1.0	1.0	1.0	1.0
686	915	1380	8.60	11.00	1.27	—	—	—	—	11.4	13.5	15.5	16.5	18.0	19.5	20.5	23.0	24.5	25.5	28.0	30.5	33.0	35.5	38.0	41.5
						—	—	—	—	0.9	0.9	0.9	0.9	0.9	0.9	0.9	1.0	1.0	1.0	1.0	1.0	1.0	1.0	1.0	1.0
684	912	1376	4.80	6.20	1.27	9.7	11.2	13.2	15.2	18.2	20.2	22.2	23.3	24.8	26.3	27.3	29.8	31.3	32.3	34.8	37.3	39.8	42.3	44.8	48.3
			*			0.8	0.8	0.9	0.9	0.9	0.9	0.9	0.9	0.9	0.9	0.9	1.0	1.0	1.0	1.0	1.0	1.0	1.0	1.0	1.0
682	910	1373	6.20	8.00	1.27	—	8.7	10.7	12.7	15.7	17.7	19.7	20.7	22.2	23.7	24.7	27.2	28.7	29.7	32.2	34.7	37.2	39.7	42.2	45.7
						—	0.8	0.8	0.9	0.9	0.9	0.9	0.9	0.9	0.9	0.9	1.0	1.0	1.0	1.0	1.0	1.0	1.0	1.0	1.0
681	907	1369	5.40	7.00	1.28	8.6	10.1	12.1	14.1	17.1	19.1	21.1	22.1	23.6	25.1	26.1	28.6	30.2	31.2	33.7	36.2	38.7	41.2	43.7	47.2
						0.8	0.8	0.8	0.9	0.9	0.9	0.9	0.9	0.9	0.9	0.9	1.0	1.0	1.0	1.0	1.0	1.0	1.0	1.0	1.0
678	904	1364	4.60	6.00	1.28	10.1	11.6	13.6	15.6	18.6	20.6	22.6	23.6	25.1	26.6	27.6	30.1	31.6	32.6	35.1	37.6	40.1	42.6	45.1	48.6
			*			0.8	0.8	0.9	0.9	0.9	0.9	0.9	0.9	0.9	0.9	0.9	1.0	1.0	1.0	1.0	1.0	1.0	1.0	1.0	1.0
676	901	1359	6.60	8.60	1.29	—	—	9.9	11.9	14.9	16.9	18.9	19.9	21.4	22.9	23.9	26.4	27.9	28.9	31.4	33.9	36.4	38.9	41.1	45.0
						—	—	0.8	0.9	0.9	0.9	0.9	0.9	0.9	0.9	0.9	1.0	1.0	1.0	1.0	1.0	1.0	1.0	1.0	1.0
675	900	1358	5.20	6.80	1.29	8.9	10.4	12.4	14.5	17.5	19.5	21.5	22.5	24.0	25.5	26.5	29.0	30.5	31.5	34.0	36.5	39.0	41.5	44.0	47.5
			*			0.8	0.8	0.8	0.9	0.9	0.9	0.9	0.9	0.9	0.9	0.9	1.0	1.0	1.0	1.0	1.0	1.0	1.0	1.0	1.0
670	893	1347	5.00	6.60	1.30	9.3	10.8	12.8	14.8	17.8	19.8	21.8	22.8	24.3	25.8	26.8	29.3	30.8	31.8	34.3	36.8	39.3	41.8	44.3	47.8
			*			0.8	0.8	0.8	0.9	0.9	0.9	0.9	0.9	0.9	0.9	0.9	1.0	1.0	1.0	1.0	1.0	1.0	1.0	1.0	1.0
668	891	1344	5.60	7.40	1.30	8.1	9.6	11.7	13.7	16.7	18.7	20.7	21.7	23.2	24.7	25.7	28.2	29.7	30.7	33.2	35.7	38.2	40.7	43.2	46.7
						0.8	0.8	0.8	0.9	0.9	0.9	0.9	0.9	0.9	0.9	0.9	1.0	1.0	1.0	1.0	1.0	1.0	1.0	1.0	1.0
665	887	1338	9.40	12.40	1.31	—	—	—	—	—	—	13.7	14.7	16.2	17.7	18.7	21.2	22.7	23.7	26.2	28.7	31.2	33.7	36.2	39.8
						—	—	—	—	—	—	0.9	0.9	0.9	0.9	0.9	1.0	1.0	1.0	1.0	1.0	1.0	1.0	1.0	1.0
664	885	1335	4.80	6.40	1.31	9.6	11.1	13.1	15.1	18.1	20.1	22.1	23.1	24.6	26.6	27.1	29.6	31.1	32.1	34.6	37.1	39.6	42.1	44.6	48.1
			*			0.8	0.8	0.8	0.9	0.9	0.9	0.9	0.9	0.9	0.9	0.9	1.0	1.0	1.0	1.0	1.0	1.0	1.0	1.0	1.0
662	882	1331	6.00	8.00	1.31	—	8.8	10.9	12.9	15.9	17.9	19.9	20.9	22.4	23.9	24.9	27.4	28.9	29.9	32.4	34.9	37.4	39.9	42.4	45.9
						—	0.8	0.8	0.9	0.9	0.9	0.9	0.9	0.9	0.9	0.9	1.0	1.0	1.0	1.0	1.0	1.0	1.0	1.0	1.0
657	877	1323	4.60	6.20	1.32	9.9	11.4	13.4	15.4	18.4	20.4	22.4	23.4	24.9	26.4	27.4	29.9	31.4	32.4	34.9	37.4	39.9	42.4	44.9	48.4
			*			0.8	0.8	0.8	0.9	0.9	0.9	0.9	0.9	0.9	0.9	0.9	1.0	1.0	1.0	1.0	1.0	1.0	1.0	1.0	1.0
657	876	1321	5.20	7.00	1.32	8.8	10.3	12.3	14.3	17.3	19.3	21.3	22.3	23.8	25.3	26.3	28.8	30.3	31.3	33.8	36.3	38.8	41.3	43.8	47.3
			*			0.8	0.8	0.8	0.9	0.9	0.9	0.9	0.9	0.9	0.9	0.9	1.0	1.0	1.0	1.0	1.0	1.0	1.0	1.0	1.0

* Diameters below RMA minimum for other than Cog-Belt V-belts. Use with Super Blue Ribbon or Aramax V-belts will result in reduced life and loss of efficiency.

CLASSICAL SECTION PRE-ENGINEERED DRIVE SELECTION TABLES

B, BP, BK, BX PRE-ENGINEERED TABLES RATIO 1.22 - 1.32

V-Belt Number and Center Distance (Other sizes may be available, see page 216)															Sheave Datum Diameters		Rated HP per Belt (Includes Added HP for Speed Ratio)								
																	Super Blue Ribbon & Aramax BP & BK RPM of Small Sheave			Super II (B) RPM of Small Sheave			Gold Label Cog-Belt (BX) RPM of Small Sheave		
B 120	B 128	B 136	B 144	B 154	B 158	B 173	B 180	B 195	B 210	B 225	B 240	B 255	B 270	B 300	Small Sheave	Large Sheave	870 RPM	1160 RPM	1750 RPM	870 RPM	1160 RPM	1750 RPM	870 RPM	1160 RPM	1750 RPM
51.8	55.8	59.8	63.8	68.8	70.8	78.3	81.8	89.3	96.8	103.5	111.0	118.5	126.0	141.0	5.20	6.40	4.43	5.52	7.35	4.91	6.13	8.25	5.55	6.95	9.41
1.0	1.1	1.1	1.1	1.1	1.1	1.1	1.1	1.1	1.1	1.2	1.2	1.2	1.2	1.2	*										
48.6	52.6	56.6	60.6	65.6	67.6	75.1	78.6	86.1	93.6	100.4	107.9	115.4	122.9	137.9	7.00	8.60	7.05	8.83	11.79	7.31	9.16	12.26	7.69	9.61	12.87
1.0	1.1	1.1	1.1	1.1	1.1	1.1	1.1	1.1	1.1	1.2	1.2	1.2	1.2	1.2											
50.4	54.4	58.4	62.4	67.4	69.4	76.9	80.4	87.9	95.4	102.1	109.6	117.1	124.6	139.6	6.00	7.40	5.62	7.02	9.39	5.99	7.51	10.10	6.52	8.16	11.01
1.0	1.1	1.1	1.1	1.1	1.1	1.1	1.1	1.1	1.1	1.2	1.2	1.2	1.2	1.2											
52.1	56.1	60.1	64.1	69.1	71.1	78.6	82.1	89.6	97.1	103.9	111.4	118.9	126.4	141.4	5.00	6.20	4.14	5.14	6.84	4.64	5.79	7.79	5.31	6.65	9.01
1.0	1.1	1.1	1.1	1.1	1.1	1.1	1.1	1.1	1.1	1.2	1.2	1.2	1.2	1.2	*										
52.4	56.4	60.4	64.4	69.4	71.4	78.9	82.4	89.9	97.4	104.2	111.7	119.2	126.7	141.7	4.80	6.00	3.85	4.77	6.32	4.36	5.45	7.32	5.07	6.35	8.60
1.0	1.1	1.1	1.1	1.1	1.1	1.1	1.1	1.1	1.1	1.2	1.2	1.2	1.2	1.2	*										
51.0	55.0	59.0	63.0	68.0	70.0	77.5	81.0	88.5	96.0	102.8	110.3	117.8	125.3	140.3	5.60	7.00	5.04	6.29	8.40	5.46	6.84	9.21	6.05	7.58	10.25
1.0	1.1	1.1	1.1	1.1	1.1	1.1	1.1	1.1	1.1	1.2	1.2	1.2	1.2	1.2											
49.6	53.6	57.6	61.6	66.6	68.6	76.1	79.6	87.1	94.6	101.3	108.8	116.3	123.8	138.8	6.40	8.00	6.21	7.77	10.39	6.54	8.19	11.00	7.01	8.77	11.80
1.0	1.1	1.1	1.1	1.1	1.1	1.1	1.1	1.1	1.1	1.2	1.2	1.2	1.2	1.2											
52.7	56.7	60.7	64.7	69.7	71.7	79.2	82.7	90.2	97.7	104.5	112.0	119.5	127.0	142.0	4.60	5.80	3.55	4.39	5.80	4.09	5.10	6.85	4.83	6.04	8.19
1.0	1.1	1.1	1.1	1.1	1.1	1.1	1.1	1.1	1.1	1.2	1.2	1.2	1.2	1.2	*										
51.3	55.3	59.3	63.3	68.3	70.3	77.8	81.3	88.8	96.3	103.1	110.6	118.1	125.6	140.6	5.40	6.80	4.75	5.92	7.90	5.20	6.50	8.76	5.82	7.29	9.85
1.0	1.1	1.1	1.1	1.1	1.1	1.1	1.1	1.1	1.1	1.2	1.2	1.2	1.2	1.2											
48.8	52.8	56.8	60.8	65.8	67.8	75.3	78.8	86.3	93.8	100.6	108.1	115.6	123.1	138.1	6.80	8.60	6.79	8.50	11.36	7.07	8.86	11.88	7.48	9.36	12.55
1.0	1.1	1.1	1.1	1.1	1.1	1.1	1.1	1.1	1.1	1.1	1.2	1.2	1.2	1.2											
51.6	55.6	59.6	63.6	68.6	70.6	78.1	81.6	89.1	96.8	103.4	110.9	118.4	125.9	140.9	5.20	6.60	4.46	5.55	7.40	4.93	6.16	8.30	5.58	6.98	9.46
1.0	1.1	1.1	1.1	1.1	1.1	1.1	1.1	1.1	1.1	1.2	1.2	1.2	1.2	1.2	*										
47.7	51.7	55.7	59.7	64.7	66.7	74.2	77.7	85.2	92.7	99.5	107.0	114.5	122.0	137.0	7.40	9.40	7.65	9.57	12.76	7.86	9.84	13.13	8.18	10.21	13.63
1.0	1.1	1.1	1.1	1.1	1.1	1.1	1.1	1.1	1.1	1.1	1.2	1.2	1.2	1.2											
50.5	54.5	58.5	62.5	67.5	69.5	77.0	80.5	88.0	95.5	102.3	109.8	117.3	124.8	139.8	5.80	7.40	5.35	6.68	8.94	5.75	7.20	9.70	6.31	7.90	10.67
1.0	1.1	1.1	1.1	1.1	1.1	1.1	1.1	1.1	1.1	1.2	1.2	1.2	1.2	1.2											
51.9	55.9	59.9	63.9	68.9	70.9	78.4	81.9	89.4	96.9	103.7	111.2	118.7	126.2	141.2	5.00	6.40	4.16	5.17	6.89	4.66	5.82	7.84	5.34	6.68	9.06
1.0	1.1	1.1	1.1	1.1	1.1	1.1	1.1	1.1	1.1	1.2	1.2	1.2	1.2	1.2	*										
45.5	49.5	53.5	57.5	62.5	64.5	72.0	75.5	83.0	90.5	97.2	104.7	112.2	119.8	134.8	8.60	11.00	9.32	11.65	15.36	9.38	11.72	15.46	9.52	11.85	15.61
1.0	1.0	1.1	1.1	1.1	1.1	1.1	1.1	1.1	1.1	1.1	1.2	1.2	1.2	1.2											
52.3	56.3	60.3	64.3	69.3	71.3	78.8	82.3	89.8	97.3	104.0	111.5	119.0	126.5	141.5	4.80	6.20	3.87	4.80	6.37	4.39	5.48	7.37	5.09	6.38	8.65
1.0	1.1	1.1	1.1	1.1	1.1	1.1	1.1	1.1	1.1	1.2	1.2	1.2	1.2	1.2											
49.7	53.7	57.7	61.7	66.7	68.7	76.2	79.7	87.2	94.7	101.5	109.0	116.5	124.0	139.0	6.20	8.00	5.94	7.43	9.94	6.29	7.88	10.61	6.79	8.50	11.46
1.0	1.1	1.1	1.1	1.1	1.1	1.1	1.1	1.1	1.1	1.1	1.2	1.2	1.2	1.2											
51.2	55.2	59.2	63.2	68.2	70.2	77.7	81.2	88.7	96.2	102.9	110.4	117.9	125.4	140.4	5.40	7.00	4.77	5.95	7.94	5.22	6.53	8.80	5.84	7.31	9.89
1.0	1.1	1.1	1.1	1.1	1.1	1.1	1.1	1.1	1.1	1.2	1.2	1.2	1.2	1.2											
52.6	56.6	60.6	64.6	69.6	71.6	79.1	82.6	90.1	97.6	104.3	111.8	119.3	126.8	141.8	4.60	6.00	3.57	4.42	5.85	4.11	5.13	6.90	4.85	6.07	8.24
1.0	1.1	1.1	1.1	1.1	1.1	1.1	1.1	1.1	1.1	1.2	1.2	1.2	1.2	1.2	*										
49.0	53.0	57.0	61.0	66.0	68.0	75.5	79.0	86.5	94.0	100.7	108.2	115.7	123.2	138.2	6.60	8.60	6.52	8.17	10.93	6.83	8.56	11.49	7.27	9.10	12.23
1.0	1.1	1.1	1.1	1.1	1.1	1.1	1.1	1.1	1.1	1.1	1.2	1.2	1.2	1.2											
51.5	55.5	59.5	63.5	68.5	70.5	78.0	81.5	89.0	96.5	103.2	110.7	118.2	125.7	140.7	5.20	6.80	4.48	5.57	7.44	4.95	6.19	8.34	5.60	7.01	9.50
1.0	1.1	1.1	1.1	1.1	1.1	1.1	1.1	1.1	1.1	1.2	1.2	1.2	1.2	1.2	*										
51.8	55.8	59.8	63.8	68.8	70.8	78.3	81.8	89.3	96.3	103.5	111.0	118.5	126.0	141.0	5.00	6.60	4.18	5.20	6.92	4.68	5.85	7.88	5.36	6.71	9.10
1.0	1.1	1.1	1.1	1.1	1.1	1.1	1.1	1.1	1.1	1.2	1.2	1.2	1.2	1.2	*										
50.7	54.7	58.7	62.7	67.7	69.7	77.2	80.7	88.2	95.7	102.4	109.9	117.4	124.9	139.9	5.60	7.40	5.08	6.34	8.48	5.50	6.89	9.28	6.09	7.63	10.32
1.0	1.1	1.1	1.1	1.1	1.1	1.1	1.1	1.1	1.1	1.1	1.2	1.2	1.2	1.2											
43.8	47.8	51.8	55.8	60.8	62.8	70.3	73.8	81.3	88.8	95.5	103.0	110.5	118.0	133.0	9.40	12.40	10.42	13.00	17.00	10.39	12.94	16.91	10.41	12.91	16.84
1.0	1.0	1.1	1.1	1.1	1.1	1.1	1.1	1.1	1.1	1.1	1.2	1.2	1.2	1.2											
52.1	56.1	60.1	64.1	69.1	71.1	78.6	82.1	89.6	97.1	103.9	111.4	118.9	126.4	141.4	4.80	6.40	3.89	4.83	6.41	4.41	5.50	7.41	5.11	6.41	8.69
1.0	1.1	1.1	1.1	1.1	1.1	1.1	1.1	1.1	1.1	1.2	1.2	1.2	1.2	1.2	*										
49.9	53.9	57.9	61.9	66.9	68.9	76.4	79.9	87.4	94.9	101.6	109.1	116.7	124.2	139.2	6.00	8.00	5.67	7.09	9.49	6.04	7.57	10.20	6.58	8.23	11.12
1.0	1.1	1.1	1.1	1.1	1.1	1.1	1.1	1.1	1.1	1.1	1.2	1.2	1.2	1.2											
52.4	56.4	60.4	64.4	69.4	71.4	78.9	82.4	89.9	97.4	104.2	111.7	119.2	126.7	141.7	4.60	6.20	3.59	4.45	5.89	4.13	5.16	6.93	4.87	6.10	8.28
1.0	1.1	1.1	1.1	1.1	1.1	1.1	1.1	1.1	1.1	1.2	1.2	1.2	1.2	1.2	*										
51.3	55.3	59.3	63.3	68.3	70.3	77.8	81.3	88.8	96.3	103.1	110.6	118.1	125.6	140.6	5.20	7.00	4.49	5.60	7.47	4.96	6.21	8.37	5.61	7.03	9.53

* Diameters below RMA minimum for other than Cog-Belt V-belts. Use with Super Blue Ribbon or Aramax V-belts will result in reduced life and loss of efficiency.

CLASSICAL SECTION PRE-ENGINEERED DRIVE SELECTION TABLES

B, BP, BK, BX PRE-ENGINEERED TABLES RATIO 1.33 - 1.48

Driven Speed for Motor Speed of			Sheave Datum Diameters		V-Belt Number and Center Distance (other sizes may be available, see page 216)																					
870 RPM	1160 RPM	1750 RPM	Small Sheave	Large Sheave	Speed Ratio	B 35	B 38	B 42	B 46	B 52	B 56	B 60	B 62	B 65	B 68	B 70	B 75	B 78	B 80	B 85	B 90	B 95	B 100	B 105	B 112
656	875	1320	6.40	8.60	1.33	—	—	10.1	12.1	15.1	17.1	19.1	20.1	21.6	23.1	24.1	26.6	28.1	29.1	31.6	34.1	36.6	39.1	41.6	45.1
						—	—	0.8	0.9	0.9	0.9	0.9	0.9	0.9	0.9	0.9	1.0	1.0	1.0	1.0	1.0	1.0	1.0	1.0	1.0
656	874	1319	7.00	9.40	1.33	—	—	—	11.0	14.0	16.0	18.0	19.0	20.5	22.0	23.0	25.5	27.0	28.0	30.5	33.0	35.5	38.0	40.5	44.0
						—	—	—	0.9	0.9	0.9	0.9	0.9	0.9	0.9	0.9	1.0	1.0	1.0	1.0	1.0	1.0	1.0	1.0	1.0
651	868	1309	5.00	6.80	1.34	9.1	10.6	12.6	14.6	17.6	19.6	21.6	22.6	24.1	25.6	26.6	29.1	30.6	31.6	34.1	36.6	39.1	41.6	44.1	47.6
			*			0.8	0.8	0.8	0.9	0.9	0.9	0.9	0.9	0.9	0.9	0.9	1.0	1.0	1.0	1.0	1.0	1.0	1.0	1.0	1.0
645	861	1298	5.40	7.40	1.35	8.3	9.8	11.8	13.8	16.8	18.8	20.8	21.8	23.3	24.8	25.8	28.3	29.8	30.8	33.3	35.8	38.3	40.8	43.3	46.8
						0.8	0.8	0.8	0.9	0.9	0.9	0.9	0.9	0.9	0.9	0.9	1.0	1.0	1.0	1.0	1.0	1.0	1.0	1.0	1.0
645	860	1297	4.80	6.60	1.35	9.4	10.9	12.9	14.9	17.9	19.9	21.9	22.9	24.4	25.9	26.9	29.4	30.9	31.9	34.4	36.9	39.4	41.9	44.4	47.9
			*			0.8	0.8	0.8	0.9	0.9	0.9	0.9	0.9	0.9	0.9	0.9	1.0	1.0	1.0	1.0	1.0	1.0	1.0	1.0	1.0
641	854	1289	5.80	8.00	1.36	—	9.0	11.0	13.0	16.0	18.0	20.0	21.0	22.5	24.0	25.0	27.5	29.0	30.0	32.5	35.0	37.5	40.0	42.5	46.0
						—	0.8	0.8	0.9	0.9	0.9	0.9	0.9	0.9	0.9	0.9	1.0	1.0	1.0	1.0	1.0	1.0	1.0	1.0	1.0
640	853	1287	8.00	11.00	1.36	—	—	—	—	11.9	13.9	15.9	16.9	18.4	19.9	20.9	23.4	24.9	25.9	28.4	30.9	33.4	35.9	38.4	42.0
						—	—	—	—	0.9	0.9	0.9	0.9	0.9	0.9	0.9	0.9	1.0	1.0	1.0	1.0	1.0	1.0	1.0	1.0
638	851	1283	4.60	6.40	1.36	9.7	11.2	13.2	15.2	18.2	20.2	22.2	23.2	24.7	26.2	27.2	29.7	31.2	32.2	34.7	37.2	39.8	42.3	44.8	48.3
			*			0.8	0.8	0.8	0.9	0.9	0.9	0.9	0.9	0.9	0.9	0.9	1.0	1.0	1.0	1.0	1.0	1.0	1.0	1.0	1.0
638	851	1283	6.80	9.40	1.36	—	—	—	11.1	14.1	16.1	18.1	19.1	20.6	22.1	23.1	25.6	27.1	28.1	30.6	33.2	35.7	38.2	40.7	44.2
						—	—	—	0.9	0.9	0.9	0.9	0.9	0.9	0.9	0.9	1.0	1.0	1.0	1.0	1.0	1.0	1.0	1.0	1.0
637	849	1281	6.20	8.60	1.37	—	—	10.2	12.2	15.2	17.2	19.2	20.2	21.7	23.2	24.2	26.7	28.3	29.3	31.8	34.3	36.8	39.3	41.8	45.3
						—	—	0.8	0.9	0.9	0.9	0.9	0.9	0.9	0.9	0.9	1.0	1.0	1.0	1.0	1.0	1.0	1.0	1.0	1.0
633	844	1274	5.00	7.00	1.37	8.9	10.4	12.4	14.4	17.4	19.4	21.5	22.5	24.0	25.5	26.5	29.0	30.5	31.5	34.0	36.5	39.0	41.5	44.0	47.5
			*			0.8	0.8	0.8	0.9	0.9	0.9	0.9	0.9	0.9	0.9	0.9	1.0	1.0	1.0	1.0	1.0	1.0	1.0	1.0	1.0
627	836	1260	4.80	6.80	1.39	9.2	10.7	12.8	14.8	17.8	19.8	21.8	22.8	24.3	25.8	26.8	29.3	30.8	31.8	34.3	36.8	39.3	41.8	44.3	47.8
			*			0.8	0.8	0.8	0.9	0.9	0.9	0.9	0.9	0.9	0.9	0.9	1.0	1.0	1.0	1.0	1.0	1.0	1.0	1.0	1.0
623	831	1253	5.20	7.40	1.40	8.4	9.9	12.0	14.0	17.0	19.0	21.0	22.0	23.5	25.0	26.0	28.5	30.0	31.0	33.5	36.0	38.5	41.0	43.5	47.0
			*			0.8	0.8	0.8	0.9	0.9	0.9	0.9	0.9	0.9	0.9	0.9	1.0	1.0	1.0	1.0	1.0	1.0	1.0	1.0	1.0
620	827	1247	6.60	9.40	1.40	—	—	—	11.2	14.3	16.3	18.3	19.3	20.8	22.3	23.3	25.8	27.3	28.3	30.8	33.3	35.8	38.3	40.8	44.3
						—	—	—	0.8	0.9	0.9	0.9	0.9	0.9	0.9	0.9	0.9	0.9	1.0	1.0	1.0	1.0	1.0	1.0	1.0
620	827	1247	5.60	8.00	1.40	—	9.1	11.2	13.2	16.2	18.2	20.2	21.2	22.7	24.2	25.2	27.7	29.2	30.2	32.7	35.2	37.7	40.2	42.7	46.2
						—	0.8	0.8	0.9	0.9	0.9	0.9	0.9	0.9	0.9	0.9	1.0	1.0	1.0	1.0	1.0	1.0	1.0	1.0	1.0
620	826	1246	4.60	6.60	1.40	9.6	11.1	13.1	15.1	18.1	20.1	22.1	23.1	24.6	26.1	27.1	29.6	31.1	32.1	34.6	37.1	39.6	42.1	44.6	48.1
						0.8	0.8	0.8	0.9	0.9	0.9	0.9	0.9	0.9	0.9	0.9	1.0	1.0	1.0	1.0	1.0	1.0	1.0	1.0	1.0
617	823	1242	6.00	8.60	1.41	—	—	10.4	12.4	15.4	17.4	19.4	20.4	21.9	23.4	24.4	26.9	28.4	29.4	31.9	34.4	36.9	39.4	41.9	45.4
						—	—	0.8	0.9	0.9	0.9	0.9	0.9	0.9	0.9	0.9	1.0	1.0	1.0	1.0	1.0	1.0	1.0	1.0	1.0
611	814	1228	8.60	12.40	1.42	—	—	—	—	—	12.3	14.3	15.3	16.8	18.3	19.3	21.8	23.3	24.3	26.8	29.3	31.8	34.4	36.9	40.4
						—	—	—	—	—	0.9	0.9	0.9	0.9	0.9	0.9	0.9	0.9	1.0	1.0	1.0	1.0	1.0	1.0	1.0
610	813	1226	4.80	7.00	1.43	9.1	10.6	12.6	14.6	17.6	19.6	21.6	22.6	24.1	25.6	26.6	29.1	30.6	31.6	34.1	36.6	39.1	41.6	44.1	47.6
			*			0.8	0.8	0.8	0.9	0.9	0.9	0.9	0.9	0.9	0.9	0.9	1.0	1.0	1.0	1.0	1.0	1.0	1.0	1.0	1.0
608	811	1223	9.40	13.60	1.43	—	—	—	—	—	—	—	13.7	15.2	16.7	17.7	20.2	21.7	22.7	25.2	27.8	30.3	32.8	35.3	38.8
						—	—	—	—	—	—	—	0.9	0.9	0.9	0.9	0.9	0.9	1.0	1.0	1.0	1.0	1.0	1.0	1.0
602	803	1212	6.40	9.40	1.44	—	—	—	11.4	14.4	16.4	18.4	19.4	209.	22.4	23.4	25.9	27.4	28.5	31.0	33.5	36.0	38.5	41.0	44.5
						—	—	—	0.8	0.9	0.9	0.9	0.9	0.9	0.9	0.9	0.9	1.0	1.0	1.0	1.0	1.0	1.0	1.0	1.0
602	803	1212	4.60	6.80	1.44	9.4	10.9	12.9	14.9	17.9	19.9	21.9	22.9	24.4	25.9	26.9	29.4	30.9	31.9	34.4	36.9	39.4	41.9	44.4	47.9
			*			0.8	0.8	0.8	0.9	0.9	0.9	0.9	0.9	0.9	0.9	0.9	1.0	1.0	1.0	1.0	1.0	1.0	1.0	1.0	1.0
601	801	1208	5.00	7.40	1.45	8.6	10.1	12.1	14.1	17.1	19.1	21.1	22.1	23.6	25.1	26.1	28.6	30.1	31.1	33.6	36.1	38.6	41.1	43.6	47.1
			*			0.8	0.8	0.8	0.9	0.9	0.9	0.9	0.9	0.9	0.9	0.9	1.0	1.0	1.0	1.0	1.0	1.0	1.0	1.0	1.0
599	799	1205	5.40	8.00	1.45	—	9.3	11.3	13.3	16.3	18.3	20.3	21.3	22.8	24.3	25.3	27.8	29.3	30.3	32.8	35.4	37.9	40.4	42.9	46.4
						—	0.8	0.8	0.9	0.9	0.9	0.9	0.9	0.9	0.9	0.9	1.0	1.0	1.0	1.0	1.0	1.0	1.0	1.0	1.0
598	797	1203	5.80	8.60	1.46	—	—	10.5	12.5	15.5	17.5	19.5	20.5	22.0	23.5	24.6	27.1	28.6	29.6	32.1	34.6	37.1	39.6	42.1	45.6
						—	—	0.8	0.9	0.9	0.9	0.9	0.9	0.9	0.9	0.9	1.0	1.0	1.0	1.0	1.0	1.0	1.0	1.0	1.0
594	792	1195	7.40	11.00	1.46	—	—	—	—	12.3	14.3	16.3	17.4	18.9	20.4	21.4	23.9	25.4	26.4	28.9	31.4	33.9	36.4	38.9	42.4
						—	—	—	—	0.9	0.9	0.9	0.9	0.9	0.9	0.9	0.9	1.0	1.0	1.0	1.0	1.0	1.0	1.0	1.0
588	784	1182	3.40	5.20	1.48	11.6	13.1	15.1	17.1	20.1	22.1	24.1	25.1	26.6	28.1	29.1	31.6	33.1	34.1	36.6	39.1	41.6	44.1	46.6	50.1
			*			0.8	0.8	0.8	0.9	0.9	0.9	0.9	0.9	0.9	0.9	0.9	1.0	1.0	1.0	1.0	1.0	1.0	1.0	1.0	1.0
587	783	1181	3.80	5.80	1.48	10.8	12.3	14.3	16.3	19.3	21.3	23.3	24.3	25.8	27.3	28.3	30.8	32.3	33.3	35.8	38.3	40.8	43.3	45.8	49.4
			*			0.8	0.8	0.8	0.9	0.9	0.9	0.9	0.9	0.9	0.9	0.9	1.0	1.0	1.0	1.0	1.0	1.0	1.0	1.0	1.0
586	781	1179	4.60	7.00	1.48	9.2	10.7	12.7	14.7	17.7	19.8	21.8	22.8	24.3	25.8	26.8	29.3	30.8	31.8	34.3	36.8	39.3	41.8	44.3	47.8
			*			0.8	0.8	0.8	0.9	0.9	0.9	0.9	0.9	0.9	0.9	0.9	1.0	1.0	1.0	1.0	1.0	1.0	1.0	1.0	1.0

* Diameters below RMA minimum for other than Cog-Belt V-belts. Use with Super Blue Ribbon or Aramax V-belts will result in reduced life and loss of efficiency.

CLASSICAL SECTION PRE-ENGINEERED DRIVE SELECTION TABLES

B, BP, BK, BX PRE-ENGINEERED TABLES — RATIO 1.33 - 1.48

V-Belt Number and Center Distance (Other sizes may be available, see page 216)															Sheave Datum Diameters		Rated HP per Belt (Includes Added HP for Speed Ratio)								
																	Super Blue Ribbon & Aramax BP & BK RPM of Small Sheave			Super II (B) RPM of Small Sheave			Gold Label Cog-Belt (BX) RPM of Small Sheave		
B 120	B 128	B 136	B 144	B 154	B 158	B 173	B 180	B 195	B 210	B 225	B 240	B 255	B 270	B 300	Small Sheave	Large Sheave	870 RPM	1160 RPM	1750 RPM	870 RPM	1160 RPM	1750 RPM	870 RPM	1160 RPM	1750 RPM
49.1	53.1	57.1	61.1	66.1	68.1	75.6	79.1	86.6	94.1	100.9	108.4	115.9	123.4	138.4	6.40	8.60	6.25	7.83	10.48	6.58	8.25	11.10	7.05	8.83	11.89
1.0	1.1	1.1	1.1	1.1	1.1	1.1	1.1	1.1	1.1	1.1	1.2	1.2	1.2	1.2											
48.0	52.0	56.0	60.0	65.0	67.0	74.5	78.0	85.5	93.0	99.8	107.3	114.8	122.3	137.3	7.00	9.40	7.11	8.91	11.91	7.37	9.24	12.38	7.75	9.69	12.99
1.0	1.0	1.1	1.1	1.1	1.1	1.1	1.1	1.1	1.1	1.1	1.2	1.2	1.2	1.2											
51.6	55.6	59.6	63.6	68.6	70.6	78.1	81.6	89.1	96.6	103.4	110.9	118.4	125.9	140.9	5.00	6.80	4.20	5.22	6.96	4.69	5.87	7.91	5.37	6.73	9.13
1.0	1.1	1.1	1.1	1.1	1.1	1.1	1.1	1.1	1.1	1.1	1.2	1.2	1.2	1.2	*										
50.8	54.8	58.8	62.8	67.8	69.8	77.3	80.8	88.3	95.8	102.6	110.1	117.6	125.1	140.1	5.40	7.40	4.80	5.99	8.00	5.25	6.57	8.86	5.87	7.35	9.96
1.0	1.1	1.1	1.1	1.1	1.1	1.1	1.1	1.1	1.1	1.1	1.2	1.2	1.2	1.2											
51.9	55.9	59.9	63.9	68.9	70.9	78.4	81.9	89.4	96.9	103.7	111.2	118.7	126.2	141.2	4.80	6.60	3.90	4.85	6.44	4.42	5.53	7.44	5.13	6.43	8.72
1.0	1.1	1.1	1.1	1.1	1.1	1.1	1.1	1.1	1.1	1.1	1.2	1.2	1.2	1.2	*										
50.0	54.1	58.1	62.1	67.1	69.1	76.6	80.1	87.6	95.1	101.8	109.3	116.8	124.3	139.3	5.80	8.00	5.39	6.74	9.03	5.79	7.26	9.79	6.35	7.96	10.76
1.0	1.1	1.1	1.1	1.1	1.1	1.1	1.1	1.1	1.1	1.1	1.2	1.2	1.2	1.2											
46.0	50.0	54.0	58.0	63.0	65.0	72.5	76.0	83.5	91.0	97.7	105.2	112.7	120.2	135.2	8.00	11.00	8.53	10.68	14.18	8.67	10.85	14.41	8.90	11.10	14.74
1.0	1.0	1.1	1.1	1.1	1.1	1.1	1.1	1.1	1.1	1.1	1.2	1.2	1.2	1.2											
52.3	56.3	60.3	64.3	69.3	71.3	78.8	82.3	89.8	97.3	104.0	111.5	119.0	126.5	141.5	4.60	6.40	3.61	4.47	5.92	4.15	5.18	6.97	4.89	6.12	8.31
1.0	1.1	1.1	1.1	1.1	1.1	1.1	1.1	1.1	1.1	1.1	1.2	1.2	1.2	1.2	*										
48.2	52.2	56.2	60.2	65.2	67.2	74.7	78.2	85.7	93.2	99.9	107.4	114.9	122.4	137.4	6.80	9.40	6.84	8.57	11.47	7.12	8.93	11.99	7.54	9.43	12.66
1.0	1.0	1.1	1.1	1.1	1.1	1.1	1.1	1.1	1.1	1.1	1.2	1.2	1.2	1.2											
49.3	53.3	57.3	61.3	66.3	68.3	75.8	79.3	86.8	94.3	101.0	108.5	116.0	123.5	138.5	6.20	8.60	5.98	7.48	10.03	6.33	7.94	10.69	6.83	8.56	11.54
1.0	1.0	1.1	1.1	1.1	1.1	1.1	1.1	1.1	1.1	1.1	1.2	1.2	1.2	1.2											
51.5	55.5	59.5	63.5	68.5	70.5	78.0	81.5	89.0	96.5	103.2	110.7	118.2	125.7	140.7	5.00	7.00	4.21	5.24	6.99	4.71	5.89	7.94	5.39	6.75	9.1?
1.0	1.1	1.1	1.1	1.1	1.1	1.1	1.1	1.1	1.1	1.1	1.2	1.2	1.2	1.2	*										
51.8	55.8	59.8	63.8	68.8	70.8	78.3	81.8	89.3	96.8	103.5	111.0	118.5	126.0	141.0	4.80	6.80	3.92	4.87	6.47	4.44	5.54	7.47	5.14	6.45	8.??
1.0	1.1	1.1	1.1	1.1	1.1	1.1	1.1	1.1	1.1	1.1	1.2	1.2	1.2	1.2	*										
51.0	55.0	59.0	63.0	68.0	70.0	77.5	81.0	88.5	96.0	102.7	110.2	117.7	125.2	140.2	5.20	7.40	4.52	5.63	7.52	4.99	6.25	8.43	5.64	7.07	9.58
1.0	1.1	1.1	1.1	1.1	1.1	1.1	1.1	1.1	1.1	1.1	1.2	1.2	1.2	1.2	*										
48.3	52.3	56.3	60.3	65.3	67.3	74.8	78.3	85.8	93.3	100.1	107.6	115.1	122.6	137.6	6.60	9.40	6.57	8.23	11.02	6.87	8.62	11.58	7.32	9.16	12.32
1.0	1.0	1.1	1.1	1.1	1.1	1.1	1.1	1.1	1.1	1.1	1.2	1.2	1.2	1.2											
50.2	54.2	58.2	62.2	67.2	69.2	76.7	80.2	87.7	95.2	102.0	109.5	117.0	124.5	139.5	5.60	8.00	5.11	6.39	8.55	5.54	6.94	9.36	6.13	7.68	10.40
1.0	1.0	1.1	1.1	1.1	1.1	1.1	1.1	1.1	1.1	1.1	1.2	1.2	1.2	1.2											
52.1	56.1	60.1	64.1	69.1	71.1	78.6	82.1	89.6	97.1	103.8	111.3	118.8	126.3	141.4	4.60	6.60	3.62	4.49	5.94	4.16	5.20	6.99	4.90	6.14	8.34
1.0	1.1	1.1	1.1	1.1	1.1	1.1	1.1	1.1	1.1	1.1	1.2	1.2	1.2	1.2	*										
49.4	53.4	57.4	61.4	66.4	68.4	75.9	79.4	86.9	94.4	101.2	108.7	116.2	123.7	138.7	6.00	8.60	5.70	7.13	9.56	6.08	7.62	10.27	6.61	8.28	11.19
1.0	1.0	1.1	1.1	1.1	1.1	1.1	1.1	1.1	1.1	1.1	1.2	1.2	1.2	1.2											
44.4	48.4	52.4	56.4	61.4	63.4	70.9	74.4	81.9	89.4	96.1	103.6	111.1	118.6	133.6	8.60	12.40	9.38	11.73	15.49	9.45	11.80	15.59	9.58	11.93	15.74
1.0	1.0	1.1	1.1	1.1	1.1	1.1	1.1	1.1	1.1	1.1	1.2	1.2	1.2	1.2											
51.6	55.6	59.6	63.6	68.6	70.6	78.6	81.6	89.1	96.6	103.4	110.9	118.4	125.9	140.9	4.80	7.00	3.93	4.88	6.49	4.45	5.56	7.49	5.16	6.46	8.77
1.0	1.1	1.1	1.1	1.1	1.1	1.1	1.1	1.1	1.1	1.1	1.2	1.2	1.2	1.2	*										
42.8	46.8	50.8	54.8	59.8	61.8	69.3	72.8	80.3	87.8	94.6	102.1	109.6	117.1	132.1	9.40	13.60	10.47	13.06	17.09	10.43	13.00	17.00	10.45	12.97	16.93
1.0	1.0	1.1	1.1	1.1	1.1	1.1	1.1	1.1	1.1	1.1	1.2	1.2	1.2	1.2											
48.5	52.5	56.5	60.5	65.5	67.5	75.0	78.5	86.0	93.5	100.2	107.7	115.2	122.7	137.7	6.40	9.40	6.29	7.88	10.56	6.62	8.30	11.18	7.09	8.88	11.97
1.0	1.0	1.1	1.1	1.1	1.1	1.1	1.1	1.1	1.1	1.1	1.2	1.2	1.2	1.2											
51.9	55.9	59.9	63.9	68.9	70.9	78.4	81.9	89.4	96.9	103.7	111.2	118.7	126.2	141.2	4.60	6.80	3.63	4.50	5.97	4.17	5.21	7.02	4.91	6.15	8.36
1.0	1.1	1.1	1.1	1.1	1.1	1.1	1.1	1.1	1.1	1.1	1.2	1.2	1.2	1.2	*										
51.1	55.1	59.1	63.1	68.2	70.2	77.7	81.2	88.7	96.2	102.9	110.4	117.9	125.4	140.4	5.00	7.40	4.23	5.27	7.03	4.73	5.92	7.98	5.41	6.78	9.20
1.0	1.0	1.1	1.1	1.1	1.1	1.1	1.1	1.1	1.1	1.1	1.2	1.2	1.2	1.2	*										
50.4	54.4	58.4	62.4	67.4	69.4	76.9	80.4	87.9	95.4	102.1	109.6	117.1	124.6	139.6	5.40	8.00	4.83	6.03	8.07	5.28	6.61	8.93	5.90	7.39	10.02
1.0	1.0	1.1	1.1	1.1	1.1	1.1	1.1	1.1	1.1	1.1	1.2	1.2	1.2	1.2											
49.6	53.6	57.6	61.6	66.6	68.6	76.1	79.6	87.1	94.6	101.3	108.8	116.3	123.8	138.8	5.80	8.60	5.42	6.78	9.09	5.82	7.30	9.85	6.38	8.00	10.82
1.0	1.0	1.1	1.1	1.1	1.1	1.1	1.1	1.1	1.1	1.1	1.2	1.2	1.2	1.2											
46.4	50.4	54.4	58.4	63.4	65.4	72.9	76.4	83.9	91.4	98.2	105.7	113.2	120.7	135.7	7.40	11.00	7.72	9.68	12.91	7.93	9.94	13.29	8.26	10.31	13.79
1.0	1.0	1.1	1.1	1.1	1.1	1.1	1.1	1.1	1.1	1.1	1.2	1.2	1.2	1.2											
54.1	58.1	62.1	66.1	71.1	73.1	80.6	84.1	91.6	99.1	105.9	113.4	120.9	128.4	143.4	3.40	5.20	1.79	2.14	2.67	2.48	3.05	4.01	3.38	4.22	5.72
1.0	1.1	1.1	1.1	1.1	1.1	1.1	1.1	1.1	1.1	1.1	1.2	1.2	1.2	1.2	*										
53.4	57.4	61.4	65.4	70.4	72.4	79.9	83.4	90.9	98.4	105.1	112.6	120.1	127.6	142.6	3.80	5.80	2.42	2.95	3.80	3.05	3.78	5.04	3.90	4.88	6.63
1.0	1.1	1.1	1.1	1.1	1.1	1.1	1.1	1.1	1.1	1.1	1.2	1.2	1.2	1.2	*										
51.8	55.8	59.8	63.8	68.8	70.8	78.3	81.8	89.3	96.8	103.5	111.0	118.5	126.0	141.0	4.60	7.00	3.64	4.51	5.99	4.18	5.23	7.04	4.92	6.17	8.38
1.0	1.1	1.1	1.1	1.1	1.1	1.1	1.1	1.1	1.1	1.1	1.2	1.2	1.2	1.2	*										

* Diameters below RMA minimum for other than Cog-Belt V-belts. Use with Super Blue Ribbon or Aramax V-belts will result in reduced life and loss of efficiency.

CLASSICAL SECTION PRE-ENGINEERED DRIVE SELECTION TABLES

B, BP, BK, BX PRE-ENGINEERED TABLES RATIO 1.49 - 1.74

Driven Speed for Motor Speed of			Sheave Datum Diameters		V-Belt Number and Center Distance (other sizes may be available, see page 216)																					
870 RPM	1160 RPM	1750 RPM	Small Sheave	Large Sheave	Speed Ratio	B 35	B 38	B 42	B 46	B 52	B 56	B 60	B 62	B 65	B 68	B 70	B 75	B 78	B 80	B 85	B 90	B 95	B 100	B 105	B 112
584	779	1176	6.20	9.40	1.49	—	—	9.5	11.5	14.6	16.6	18.6	19.6	21.1	22.6	23.6	26.1	27.6	28.6	31.1	33.6	36.1	38.6	41.1	44.6
						—	—	0.8	0.8	0.9	0.9	0.9	0.9	0.9	0.9	0.9	0.9	1.0	1.0	1.0	1.0	1.0	1.0	1.0	1.0
578	771	1163	5.60	8.60	1.50	—	8.6	10.6	12.7	15.7	17.7	19.7	20.7	22.2	23.7	24.7	27.2	28.7	29.7	32.2	34.7	37.2	39.7	42.2	45.7
						—	0.8	0.8	0.9	0.9	0.9	0.9	0.9	0.9	0.9	0.9	0.9	1.0	1.0	1.0	1.0	1.0	1.0	1.0	1.0
578	771	1163	5.20	8.00	1.50	—	9.4	11.4	13.5	16.5	18.5	20.5	21.5	23.0	24.5	25.5	28.0	29.5	30.5	33.0	35.5	38.0	40.5	43.0	46.5
			*			—	0.8	0.8	0.9	0.9	0.9	0.9	0.9	0.9	0.9	0.9	1.0	1.0	1.0	1.0	1.0	1.0	1.0	1.0	1.0
578	771	1163	4.80	7.40	1.50	8.7	10.2	12.2	14.3	17.3	19.3	21.3	22.3	23.8	25.3	26.3	28.8	30.3	31.3	33.8	36.3	38.8	41.3	43.8	47.3
			*			0.8	0.8	0.8	0.9	0.9	0.9	0.9	0.9	0.9	0.9	0.9	1.0	1.0	1.0	1.0	1.0	1.0	1.0	1.0	1.0
570	760	1146	8.00	12.40	1.53	—	—	—	—	—	12.7	14.7	15.7	17.2	18.7	19.8	22.3	23.8	24.8	27.3	29.8	32.3	34.8	37.3	40.8
						—	—	—	—	—	0.9	0.9	0.9	0.9	0.9	0.9	0.9	0.9	1.0	1.0	1.0	1.0	1.0	1.0	1.0
567	755	1140	6.00	9.40	1.54	—	—	9.7	11.7	14.7	16.7	18.7	19.7	21.2	22.7	23.7	26.2	27.8	28.8	31.3	33.8	36.3	38.8	41.3	44.8
						—	—	0.8	0.8	0.9	0.9	0.9	0.9	0.9	0.9	0.9	0.9	1.0	1.0	1.0	1.0	1.0	1.0	1.0	1.0
563	751	1133	7.00	11.00	1.54	—	—	—	—	12.6	14.6	16.6	17.6	19.2	20.7	21.7	24.2	25.7	26.7	29.2	31.7	34.2	36.7	39.2	42.7
						—	—	—	—	0.9	0.9	0.9	0.9	0.9	0.9	0.9	0.9	1.0	1.0	1.0	1.0	1.0	1.0	1.0	1.0
559	745	1124	5.40	8.60	1.56	—	8.8	10.8	12.8	15.8	17.8	19.8	20.8	22.3	23.9	24.9	27.4	28.9	29.9	32.4	34.9	37.4	39.9	42.4	45.9
						—	0.8	0.8	0.8	0.9	0.9	0.9	0.9	0.9	0.9	0.9	0.9	1.0	1.0	1.0	1.0	1.0	1.0	1.0	1.0
558	744	1123	8.60	13.60	1.56	—	—	—	—	—	—	13.2	14.2	15.8	17.3	18.3	20.8	22.3	23.3	25.8	28.4	30.9	33.4	35.9	39.4
						—	—	—	—	—	—	0.9	0.9	0.9	0.9	0.9	0.9	0.9	0.9	1.0	1.0	1.0	1.0	1.0	1.0
557	743	1121	5.00	8.00	1.56	8.1	9.6	11.6	13.6	16.6	18.6	20.6	21.6	23.1	24.6	25.6	28.1	29.7	30.7	33.2	35.7	38.2	40.7	43.2	46.7
			*			0.8	0.8	0.8	0.9	0.9	0.9	0.9	0.9	0.9	0.9	0.9	1.0	1.0	1.0	1.0	1.0	1.0	1.0	1.0	1.0
556	741	1118	4.60	7.40	1.57	8.9	10.4	12.4	14.4	17.4	19.4	21.4	22.4	23.9	25.4	26.4	28.9	30.4	31.4	33.9	36.4	39.0	41.5	44.0	47.5
			*			0.8	0.8	0.8	0.9	0.9	0.9	0.9	0.9	0.9	0.9	0.9	1.0	1.0	1.0	1.0	1.0	1.0	1.0	1.0	1.0
549	732	1104	5.80	9.40	1.59	—	—	9.8	11.8	14.9	16.9	18.9	19.9	21.4	22.9	23.9	26.4	27.9	28.9	31.4	33.9	36.4	38.9	41.4	44.9
						—	—	0.8	0.8	0.9	0.9	0.9	0.9	0.9	0.9	0.9	0.9	1.0	1.0	1.0	1.0	1.0	1.0	1.0	1.0
548	731	1102	6.80	11.00	1.59	—	—	—	—	12.7	14.8	16.8	17.8	19.3	20.8	21.8	24.3	25.8	26.8	29.3	31.9	34.4	36.9	39.4	42.9
						—	—	—	—	0.9	0.9	0.9	0.9	0.9	0.9	0.9	0.9	0.9	1.0	1.0	1.0	1.0	1.0	1.0	1.0
539	719	1085	5.20	8.60	1.61	—	8.9	10.9	12.9	16.0	18.0	20.0	21.0	22.5	24.0	25.0	27.5	29.0	30.0	32.5	35.0	37.5	40.0	42.5	46.0
			*			—	0.8	0.8	0.8	0.9	0.9	0.9	0.9	0.9	0.9	0.9	0.9	1.0	1.0	1.0	1.0	1.0	1.0	1.0	1.0
539	718	1083	9.40	15.40	1.62	—	—	—	—	—	—	—	—	—	15.1	16.1	18.7	20.2	21.2	23.7	26.3	28.8	31.3	33.8	37.3
						—	—	—	—	—	—	—	—	—	0.9	0.9	0.9	0.9	0.9	1.0	1.0	1.0	1.0	1.0	1.0
537	715	1079	4.80	8.00	1.62	8.2	9.7	11.7	13.8	16.8	18.8	20.8	21.8	23.3	24.8	25.8	28.3	29.8	30.8	33.3	35.8	38.3	40.8	43.3	46.8
			*			0.8	0.8	0.8	0.9	0.9	0.9	0.9	0.9	0.9	0.9	0.9	0.9	1.0	1.0	1.0	1.0	1.0	1.0	1.0	1.0
533	710	1072	6.60	11.00	1.63	—	—	—	—	12.9	14.9	16.9	17.9	19.5	21.0	22.0	24.5	26.0	27.0	29.5	32.0	34.5	37.0	39.5	43.0
						—	—	—	—	0.9	0.9	0.9	0.9	0.9	0.9	0.9	0.9	0.9	1.0	1.0	1.0	1.0	1.0	1.0	1.0
531	708	1068	5.60	9.40	1.64	—	—	9.9	12.0	15.0	17.0	19.0	20.0	21.5	23.0	24.0	26.6	28.1	29.1	31.6	34.1	36.6	39.1	41.6	45.1
						—	—	0.8	0.8	0.9	0.9	0.9	0.9	0.9	0.9	0.9	0.9	1.0	1.0	1.0	1.0	1.0	1.0	1.0	1.0
529	705	1064	7.40	12.40	1.65	—	—	—	—	—	13.1	15.1	16.2	17.7	19.2	20.2	22.7	24.2	25.2	27.7	30.2	32.8	35.3	37.8	41.3
						—	—	—	—	—	0.9	0.9	0.9	0.9	0.9	0.9	0.9	0.9	0.9	1.0	1.0	1.0	1.0	1.0	1.0
521	694	1047	8.00	13.60	1.67	—	—	—	—	—	—	13.6	14.7	16.2	17.7	18.7	21.3	22.8	23.8	26.3	28.8	31.3	33.8	36.3	39.8
						—	—	—	—	—	—	0.9	0.9	0.9	0.9	0.9	0.9	0.9	0.9	1.0	1.0	1.0	1.0	1.0	1.0
520	693	1046	5.00	8.60	1.67	—	9.0	11.1	13.1	16.1	18.1	20.1	21.1	22.6	24.2	25.2	27.7	29.2	30.2	32.7	35.2	37.7	40.2	42.7	46.2
			*			—	0.8	0.8	0.8	0.9	0.9	0.9	0.9	0.9	0.9	0.9	0.9	1.0	1.0	1.0	1.0	1.0	1.0	1.0	1.0
519	692	1044	9.40	16.00	1.68	—	—	—	—	—	—	—	—	—	14.6	15.6	18.2	19.7	20.7	23.2	25.7	28.3	30.8	33.3	36.8
						—	—	—	—	—	—	—	—	—	0.9	0.9	0.9	0.9	0.9	0.9	1.0	1.0	1.0	1.0	1.0
517	690	1041	6.40	11.00	1.68	—	—	—	—	13.0	15.1	17.1	18.1	19.6	21.1	22.1	24.6	26.1	27.1	29.6	32.2	34.7	37.2	39.7	43.2
						—	—	—	—	0.9	0.9	0.9	0.9	0.9	0.9	0.9	0.9	0.9	1.0	1.0	1.0	1.0	1.0	1.0	1.0
516	688	1037	4.60	8.00	1.69	8.3	9.9	11.9	13.9	16.9	18.9	20.9	21.9	23.4	24.9	25.9	28.5	30.0	31.0	33.5	36.0	38.5	41.0	43.5	47.0
			*			0.8	0.8	0.8	0.8	0.9	0.9	0.9	0.9	0.9	0.9	0.9	0.9	1.0	1.0	1.0	1.0	1.0	1.0	1.0	1.0
513	684	1032	5.40	9.40	1.70	—	—	10.1	12.1	15.1	17.2	19.2	20.2	21.7	23.2	24.2	26.7	28.2	29.2	31.7	34.2	36.7	39.2	41.7	45.2
						—	—	0.8	0.8	0.9	0.9	0.9	0.9	0.9	0.9	0.9	0.9	1.0	1.0	1.0	1.0	1.0	1.0	1.0	1.0
502	669	1010	6.20	11.00	1.73	—	—	—	10.1	13.2	15.2	17.2	18.2	19.7	21.3	22.3	24.8	26.3	27.3	29.8	32.3	34.8	37.3	39.8	43.3
						—	—	—	0.8	0.9	0.9	0.9	0.9	0.9	0.9	0.9	0.9	0.9	1.0	1.0	1.0	1.0	1.0	1.0	1.0
502	669	1009	7.00	12.40	1.73	—	—	—	—	11.3	13.4	15.4	16.4	18.0	19.5	20.5	23.0	24.5	25.5	28.0	30.5	33.1	35.6	38.1	41.6
						—	—	—	—	0.8	0.9	0.9	0.9	0.9	0.9	0.9	0.9	0.9	0.9	1.0	1.0	1.0	1.0	1.0	1.0
501	667	1007	4.80	8.60	1.74	—	9.2	11.2	13.2	16.3	18.3	20.3	21.3	22.8	24.3	25.3	27.8	29.3	30.3	32.8	35.3	37.8	40.3	42.8	46.3
			*			—	0.8	0.8	0.8	0.9	0.9	0.9	0.9	0.9	0.9	0.9	0.9	1.0	1.0	1.0	1.0	1.0	1.0	1.0	1.0

* Diameters below RMA minimum for other than Cog-Belt V-belts. Use with Super Blue Ribbon or Aramax V-belts will result in reduced life and loss of efficiency.

CLASSICAL SECTION PRE-ENGINEERED DRIVE SELECTION TABLES

B, BP, BK, BX PRE-ENGINEERED TABLES — RATIO 1.49 - 1.74

V-Belt Number and Center Distance (Other sizes may be available, see page 216)															Sheave Datum Diameters		Rated HP per Belt (Includes Added HP for Speed Ratio)								
																	Super Blue Ribbon & Aramax BP & BK RPM of Small Sheave			Super II (B) RPM of Small Sheave			Gold Label Cog-Belt (BX) RPM of Small Sheave		
B 120	B 128	B 136	B 144	B 154	B 158	B 173	B 180	B 195	B 210	B 225	B 240	B 255	B 270	B 300	Small Sheave	Large Sheave	870 RPM	1160 RPM	1750 RPM	870 RPM	1160 RPM	1750 RPM	870 RPM	1160 RPM	1750 RPM
48.6	52.6	56.6	60.6	65.6	67.6	75.1	78.6	86.1	93.6	100.4	107.9	115.4	122.9	137.9	6.20	9.40	6.01	7.53	10.09	6.37	7.98	10.76	6.87	8.60	11.61
1.0	1.0	1.1	1.1	1.1	1.1	1.1	1.1	1.1	1.1	1.1	1.2	1.2	1.2	1.2											
49.7	53.7	57.7	61.7	66.7	68.7	76.2	79.7	87.2	94.7	101.5	109.0	116.5	124.0	139.0	5.60	8.60	5.14	6.42	8.61	5.56	6.97	9.41	6.15	7.71	10.45
1.0	1.0	1.1	1.1	1.1	1.1	1.1	1.1	1.1	1.1	1.1	1.2	1.2	1.2	1.2											
50.5	54.5	58.5	62.5	67.5	69.5	77.0	80.5	88.0	95.5	102.3	109.8	117.3	124.8	139.8	5.20	8.00	4.55	5.67	7.58	5.02	6.28	8.48	5.67	7.11	9.64
1.0	1.0	1.1	1.1	1.1	1.1	1.1	1.1	1.1	1.1	1.1	1.2	1.2	1.2	1.2	*										
51.3	55.3	59.3	63.3	68.3	70.3	77.8	81.3	88.8	96.3	103.1	110.6	118.1	125.6	140.6	4.80	7.40	3.95	4.91	6.53	4.47	5.59	7.53	5.17	6.49	8.81
1.0	1.0	1.1	1.1	1.1	1.1	1.1	1.1	1.1	1.1	1.1	1.2	1.2	1.2	1.2	*										
44.8	48.8	52.8	56.8	61.8	63.8	71.3	74.8	82.3	89.9	96.6	104.1	111.6	119.1	134.1	8.00	12.40	8.58	10.74	14.27	8.72	10.91	14.50	8.95	11.16	14.83
1.0	1.0	1.1	1.1	1.1	1.1	1.1	1.1	1.1	1.1	1.1	1.2	1.2	1.2	1.2											
48.8	52.8	56.8	60.8	65.8	67.8	75.3	78.8	86.3	93.8	100.5	108.0	115.5	123.0	138.0	6.00	9.40	5.73	7.17	9.62	6.11	7.66	10.33	6.64	8.32	11.25
1.0	1.0	1.1	1.1	1.1	1.1	1.1	1.1	1.1	1.1	1.1	1.2	1.2	1.2	1.2											
46.7	50.7	54.7	58.7	63.7	65.7	73.2	76.7	84.2	91.7	98.5	106.0	113.5	121.0	136.0	7.00	11.00	7.18	8.99	12.03	7.43	9.32	12.50	7.81	9.77	13.11
1.0	1.0	1.1	1.1	1.1	1.1	1.1	1.1	1.1	1.1	1.1	1.2	1.2	1.2	1.2											
49.9	53.9	57.9	61.9	66.9	68.9	76.4	79.9	87.4	94.9	101.6	109.1	116.6	124.1	139.1	5.40	8.60	4.85	6.06	8.11	5.30	6.64	8.97	5.92	7.42	10.07
1.0	1.0	1.1	1.1	1.1	1.1	1.1	1.1	1.1	1.1	1.1	1.2	1.2	1.2	1.2											
43.4	47.4	51.4	55.4	60.4	62.4	69.9	73.4	80.9	88.4	95.2	102.7	110.2	117.7	132.7	8.60	13.60	9.41	11.77	15.55	9.48	11.84	15.65	9.61	11.97	15.80
1.0	1.0	1.1	1.1	1.1	1.1	1.1	1.1	1.1	1.1	1.1	1.2	1.2	1.2	1.2											
50.7	54.7	58.7	62.7	67.7	69.7	77.2	80.7	88.2	95.7	102.4	109.9	117.4	124.9	139.9	5.00	8.00	4.26	5.30	7.08	4.75	5.95	8.03	5.43	6.81	9.25
1.0	1.0	1.1	1.1	1.1	1.1	1.1	1.1	1.1	1.1	1.1	1.2	1.2	1.2	1.2	*										
51.5	55.5	59.5	63.5	68.5	70.5	78.0	81.5	89.0	96.5	103.2	110.7	118.2	125.7	140.7	4.60	7.40	3.66	4.54	6.02	4.20	5.25	7.07	4.94	6.19	???
1.0	1.0	1.1	1.1	1.1	1.1	1.1	1.1	1.1	1.1	1.1	1.2	1.2	1.2	1.2	*										
48.9	52.9	56.9	60.9	65.9	67.9	75.4	78.9	86.4	93.9	100.7	108.2	115.7	123.2	138.2	5.80	9.40	5.45	6.81	9.14	5.85	7.33	9.90	6.41	8.03	10.87
1.0	1.0	1.1	1.1	1.1	1.1	1.1	1.1	1.1	1.1	1.1	1.2	1.2	1.2	1.2											
46.9	50.9	54.9	58.9	63.9	65.9	73.4	76.9	84.4	91.9	98.6	106.1	113.7	121.2	136.2	6.80	11.00	6.90	8.64	11.57	7.18	9.00	12.09	7.59	9.50	12.77
1.0	1.0	1.1	1.1	1.1	1.1	1.1	1.1	1.1	1.1	1.1	1.2	1.2	1.2	1.2											
50.0	54.0	58.0	62.0	67.0	69.0	76.5	80.0	87.5	95.0	101.8	109.3	116.8	124.3	139.3	5.20	8.60	4.57	5.69	7.62	5.04	6.31	8.52	5.69	7.13	8.68
1.0	1.0	1.1	1.1	1.1	1.1	1.1	1.1	1.1	1.1	1.1	1.2	1.2	1.2	1.2	*										
41.3	45.3	49.3	53.3	58.3	60.3	67.9	71.4	78.9	86.4	93.1	100.6	108.1	115.6	130.6	9.40	15.40	10.50	13.11	17.16	10.47	13.05	17.07	10.49	13.02	17.01
1.0	1.0	1.0	1.1	1.1	1.1	1.1	1.1	1.1	1.1	1.1	1.2	1.2	1.2	1.2											
50.8	54.8	58.8	62.8	67.8	69.8	77.3	80.8	88.3	95.8	102.6	110.1	117.6	125.1	140.1	4.80	8.00	3.97	4.93	6.57	4.49	5.61	7.57	5.19	6.51	8.85
1.0	1.0	1.1	1.1	1.1	1.1	1.1	1.1	1.1	1.1	1.1	1.2	1.2	1.2	1.2	*										
47.0	51.0	55.0	59.0	64.0	66.0	73.5	77.0	84.5	92.1	98.8	106.3	113.8	121.3	136.3	6.60	11.00	6.62	8.29	11.11	6.92	8.68	11.68	7.36	9.22	12.41
1.0	1.0	1.1	1.1	1.1	1.1	1.1	1.1	1.1	1.1	1.1	1.2	1.2	1.2	1.2											
49.1	53.1	57.1	61.1	66.1	68.1	75.6	79.1	86.6	94.1	100.9	108.4	115.9	123.4	138.4	5.60	9.40	5.16	6.45	8.65	5.59	7.00	9.46	6.18	7.74	10.49
1.0	1.0	1.1	1.1	1.1	1.1	1.1	1.1	1.1	1.1	1.1	1.2	1.2	1.2	1.2											
45.3	49.3	53.3	57.3	62.3	64.3	71.8	75.3	82.8	90.3	97.1	104.6	112.1	119.6	134.6	7.40	12.40	7.76	9.72	12.98	7.97	9.98	13.35	8.29	10.36	13.85
1.0	1.0	1.1	1.1	1.1	1.1	1.1	1.1	1.1	1.1	1.1	1.2	1.2	1.2	1.2											
43.8	47.9	51.9	55.9	60.9	62.9	70.4	73.9	81.4	88.9	95.6	103.1	11.06	118.2	133.2	8.00	13.60	8.60	10.77	14.31	8.74	10.94	14.55	8.97	11.19	14.87
1.0	1.0	1.1	1.1	1.1	1.1	1.1	1.1	1.1	1.1	1.1	1.2	1.2	1.2	1.2											
50.2	54.2	58.2	62.2	67.2	69.2	76.7	80.2	87.7	95.2	102.0	109.5	117.0	124.5	139.5	5.00	8.60	4.27	5.32	7.11	4.77	5.97	8.06	5.45	6.83	9.28
1.0	1.0	1.1	1.1	1.1	1.1	1.1	1.1	1.1	1.1	1.1	1.2	1.2	1.2	1.2	*										
40.8	44.8	48.8	52.8	57.9	59.9	67.4	70.9	78.4	85.9	92.6	100.1	107.7	115.2	130.2	9.40	16.00	10.51	13.12	17.18	10.48	13.06	17.09	10.50	13.03	17.02
1.0	1.0	1.0	1.1	1.1	1.1	1.1	1.1	1.1	1.1	1.1	1.2	1.2	1.2	1.2											
47.2	51.2	55.2	59.2	64.2	66.2	73.7	77.2	84.7	92.2	99.0	106.5	114.0	121.5	136.5	6.40	11.00	6.33	7.94	10.64	6.66	8.36	11.26	7.14	8.94	12.05
1.0	1.0	1.1	1.1	1.1	1.1	1.1	1.1	1.1	1.1	1.1	1.2	1.2	1.2	1.2											
51.0	55.0	59.0	63.0	68.0	70.0	77.5	81.0	88.5	96.0	102.7	110.2	117.7	125.2	140.2	4.60	8.00	3.67	4.56	6.05	4.22	5.27	7.10	4.95	6.21	8.44
1.0	1.0	1.1	1.1	1.1	1.1	1.1	1.1	1.1	1.1	1.1	1.2	1.2	1.2	1.2	*										
49.2	53.2	57.2	61.2	66.2	68.2	75.7	79.3	86.8	94.3	101.0	108.5	116.0	123.5	138.5	5.40	9.40	4.87	6.09	8.15	5.32	6.67	9.01	5.94	7.45	10.11
1.0	1.0	1.1	1.1	1.1	1.1	1.1	1.1	1.1	1.1	1.1	1.2	1.2	1.2	1.2											
47.3	51.3	55.3	59.3	64.3	66.3	73.9	77.4	84.9	92.4	99.1	106.6	114.1	121.6	136.6	6.20	11.00	6.05	7.58	10.17	6.40	8.03	10.83	6.90	8.65	11.69
1.0	1.0	1.1	1.1	1.1	1.1	1.1	1.1	1.1	1.1	1.1	1.2	1.2	1.2	1.2											
45.6	49.6	53.6	57.6	62.6	64.6	72.1	75.6	83.1	90.6	97.4	104.9	112.4	119.9	134.9	7.00	12.40	7.20	9.02	12.08	7.46	9.35	12.55	7.84	9.81	13.17
1.0	1.0	1.1	1.1	1.1	1.1	1.1	1.1	1.1	1.1	1.1	1.2	1.2	1.2	1.2											
50.3	54.3	58.3	62.3	67.3	69.3	76.9	80.4	87.9	95.4	102.1	109.6	117.1	124.6	139.6	4.80	8.60	3.98	4.95	6.60	4.50	5.63	7.60	5.21	6.53	8.88
1.0	1.0	1.1	1.1	1.1	1.1	1.1	1.1	1.1	1.1	1.1	1.2	1.2	1.2	1.2	*										

* Diameters below RMA minimum for other than Cog-Belt V-belts. Use with Super Blue Ribbon or Aramax V-belts will result in reduced life and loss of efficiency.

CLASSICAL SECTION PRE-ENGINEERED DRIVE SELECTION TABLES

B, BP, BK, BX PRE-ENGINEERED TABLES RATIO 1.76 - 2.09

Driven Speed for Motor Speed of			Sheave Datum Diameters		V-Belt Number and Center Distance (other sizes may be available, see page 216)																					
870 RPM	1160 RPM	1750 RPM	Small Sheave	Large Sheave	Speed Ratio	B 35	B 38	B 42	B 46	B 52	B 56	B 60	B 62	B 65	B 68	B 70	B 75	B 78	B 80	B 85	B 90	B 95	B 100	B 105	B 112
495	660	996	5.20	9.40	1.76	—	—	10.2	12.3	15.3	17.3	19.3	20.3	21.8	23.3	24.3	26.9	28.4	29.4	31.9	34.4	36.9	39.4	41.9	45.4
						—	—	0.8	0.8	0.9	0.9	0.9	0.9	0.9	0.9	0.9	0.9	1.0	1.0	1.0	1.0	1.0	1.0	1.0	1.0
494	659	994	8.60	15.40	1.76	—	—	—	—	—	—	—	—	14.1	15.7	16.7	19.3	20.8	21.8	24.3	26.8	29.4	31.9	34.4	37.9
						—	—	—	—	—	—	—	—	0.9	0.9	0.9	0.9	0.9	0.9	0.9	1.0	1.0	1.0	1.0	1.0
488	651	981	6.80	12.40	1.78	—	—	—	—	11.5	13.5	15.6	16.6	18.1	19.6	20.6	23.2	24.7	25.7	28.2	30.7	33.2	35.7	38.2	41.7
						—	—	—	—	0.8	0.9	0.9	0.9	0.9	0.9	0.9	0.9	0.9	0.9	1.0	1.0	1.0	1.0	1.0	1.0
487	649	979	6.00	11.00	1.79	—	—	—	10.2	13.3	15.3	17.4	18.4	19.9	21.4	22.4	24.9	26.4	27.4	29.9	32.5	35.0	37.5	40.0	43.5
						—	—	—	0.8	0.9	0.9	0.9	0.9	0.9	0.9	0.9	0.9	0.9	1.0	1.0	1.0	1.0	1.0	1.0	1.0
483	644	972	7.40	13.60	1.80	—	—	—	—	—	12.0	14.1	15.1	16.6	18.1	19.2	21.7	23.2	24.2	26.7	29.2	31.8	34.3	36.8	40.3
						—	—	—	—	—	0.8	0.9	0.9	0.9	0.9	0.9	0.9	0.9	0.9	1.0	1.0	1.0	1.0	1.0	1.0
481	642	968	4.60	8.60	1.81	—	9.3	11.4	13.4	16.4	18.4	20.4	21.4	22.9	24.5	25.5	28.0	29.5	30.5	33.0	35.5	38.0	40.5	43.0	46.5
			*			—	0.8	0.8	0.8	0.9	0.9	0.9	0.9	0.9	0.9	0.9	0.9	1.0	1.0	1.0	1.0	1.0	1.0	1.0	1.0
477	637	960	5.00	9.40	1.82	—	—	10.4	12.4	15.4	17.5	19.5	20.5	22.0	23.5	24.5	27.0	28.5	29.5	32.0	34.5	37.0	39.5	42.0	45.5
			*			—	—	0.8	0.8	0.9	0.9	0.9	0.9	0.9	0.9	0.9	0.9	1.0	1.0	1.0	1.0	1.0	1.0	1.0	1.0
476	635	958	8.60	16.00	1.83	—	—	—	—	—	—	—	—	—	15.1	16.2	18.7	20.2	21.3	23.8	26.3	28.8	31.4	33.9	37.4
						—	—	—	—	—	—	—	—	—	0.9	0.9	0.9	0.9	0.9	0.9	1.0	1.0	1.0	1.0	1.0
474	632	954	6.60	12.40	1.83	—	—	—	—	11.6	13.7	15.7	16.7	18.2	19.8	20.8	23.3	24.8	25.8	28.3	30.8	33.4	35.9	38.4	41.9
						—	—	—	—	0.8	0.9	0.9	0.9	0.9	0.9	0.9	0.9	0.9	0.9	1.0	1.0	1.0	1.0	1.0	1.0
471	629	948	5.80	11.00	1.85	—	—	—	10.4	13.5	15.5	17.5	18.5	20.0	21.5	22.6	25.1	26.6	27.6	30.1	32.6	35.1	37.6	40.1	43.6
						—	—	—	0.8	0.9	0.9	0.9	0.9	0.9	0.9	0.9	0.9	0.9	1.0	1.0	1.0	1.0	1.0	1.0	1.0
461	615	928	8.00	15.40	1.89	—	—	—	—	—	—	—	—	14.6	16.1	17.1	19.7	21.2	22.2	24.7	27.3	29.8	32.3	34.8	38.3
						—	—	—	—	—	—	—	—	0.9	0.9	0.9	0.9	0.9	1.0	1.0	1.0	1.0	1.0	1.0	1.0
461	614	926	6.40	12.40	1.89	—	—	—	—	11.8	13.8	15.9	16.9	18.4	19.9	20.9	23.4	25.0	26.0	28.5	31.0	33.5	36.0	38.5	42.0
						—	—	—	—	0.8	0.9	0.9	0.9	0.9	0.9	0.9	0.9	0.9	0.9	1.0	1.0	1.0	1.0	1.0	1.0
460	613	924	4.80	9.40	1.89	—	—	10.5	12.5	15.6	17.6	19.6	20.6	22.1	23.6	24.6	27.1	28.7	29.7	32.2	34.7	37.2	39.7	42.2	45.7
			*			—	—	0.8	0.8	0.9	0.9	0.9	0.9	0.9	0.9	0.9	0.9	0.9	1.0	1.0	1.0	1.0	1.0	1.0	1.0
458	611	922	7.00	13.60	1.90	—	—	—	—	—	12.3	14.3	15.4	16.9	18.4	19.4	22.0	23.5	24.5	27.0	29.5	32.1	34.6	37.1	40.6
						—	—	—	—	—	0.8	0.9	0.9	0.9	0.9	0.9	0.9	0.9	0.9	1.0	1.0	1.0	1.0	1.0	1.0
456	608	917	5.60	11.00	1.91	—	—	—	10.5	13.6	15.6	17.7	18.7	20.2	21.7	22.7	25.2	26.7	27.7	30.2	32.8	35.3	37.8	40.3	43.8
						—	—	—	0.8	0.8	0.9	0.9	0.9	0.9	0.9	0.9	0.9	0.9	0.9	1.0	1.0	1.0	1.0	1.0	1.0
452	603	910	9.40	18.40	1.92	—	—	—	—	—	—	—	—	—	—	—	15.9	17.5	18.5	21.1	23.6	26.2	28.7	31.2	34.8
						—	—	—	—	—	—	—	—	—	—	—	0.9	0.9	0.9	0.9	0.9	1.0	1.0	1.0	1.0
447	596	899	6.20	12.40	1.95	—	—	—	—	11.9	13.9	16.0	17.0	18.5	20.1	21.1	23.6	25.1	26.1	28.6	31.1	33.6	36.2	38.7	42.2
						—	—	—	—	0.8	0.9	0.9	0.9	0.9	0.9	0.9	0.9	0.9	0.9	1.0	1.0	1.0	1.0	1.0	1.0
446	595	897	6.80	13.60	1.95	—	—	—	—	—	12.4	14.5	15.5	17.0	18.6	19.6	22.1	23.6	24.6	27.2	29.7	32.2	34.7	37.2	40.7
						—	—	—	—	—	0.8	0.9	0.9	0.9	0.9	0.9	0.9	0.9	0.9	1.0	1.0	1.0	1.0	1.0	1.0
444	592	894	8.00	16.00	1.96	—	—	—	—	—	—	—	—	14.0	15.5	16.6	19.1	20.7	21.7	24.2	26.8	29.3	31.8	34.3	37.8
						—	—	—	—	—	—	—	—	0.9	0.9	0.9	0.9	0.9	0.9	0.9	1.0	1.0	1.0	1.0	1.0
442	589	888	4.60	9.40	1.97	—	8.6	10.6	12.7	15.7	17.7	19.8	20.8	22.3	23.8	24.8	27.3	28.8	29.8	32.3	34.8	37.3	39.8	42.3	45.8
			*			—	0.8	0.8	0.8	0.9	0.9	0.9	0.9	0.9	0.9	0.9	0.9	0.9	1.0	1.0	1.0	1.0	1.0	1.0	1.0
441	588	887	5.40	11.00	1.97	—	—	—	10.7	13.7	15.8	17.8	18.8	20.3	21.8	22.8	25.4	26.9	27.9	30.4	32.9	35.4	37.9	40.4	43.9
						—	—	—	0.8	0.8	0.9	0.9	0.9	0.9	0.9	0.9	0.9	0.9	0.9	1.0	1.0	1.0	1.0	1.0	1.0
433	578	872	6.60	13.60	2.01	—	—	—	—	—	12.5	14.6	15.6	17.2	18.7	19.7	22.3	23.8	24.8	27.3	29.8	32.3	34.9	37.4	40.9
						—	—	—	—	—	0.8	0.9	0.9	0.9	0.9	0.9	0.9	0.9	0.9	1.0	1.0	1.0	1.0	1.0	1.0
433	578	872	6.00	12.40	2.01	—	—	—	—	12.0	14.1	16.1	17.2	18.7	20.2	21.2	23.7	25.2	26.3	28.8	31.3	33.8	36.3	38.8	42.3
						—	—	—	—	0.8	0.9	0.9	0.9	0.9	0.9	0.9	0.9	0.9	0.9	1.0	1.0	1.0	1.0	1.0	1.0
428	571	861	7.40	15.40	2.03	—	—	—	—	—	—	—	13.4	15.0	16.5	17.5	20.1	21.6	22.6	25.2	27.7	30.2	32.7	35.3	38.8
						—	—	—	—	—	—	—	0.8	0.9	0.9	0.9	0.9	0.9	0.9	0.9	1.0	1.0	1.0	1.0	1.0
425	567	856	5.20	11.00	2.05	—	—	—	10.8	13.9	15.9	17.9	19.0	20.5	22.0	23.0	25.5	27.0	28.0	30.5	33.0	35.6	38.1	40.6	44.1
			*			—	—	—	0.8	0.8	0.9	0.9	0.9	0.9	0.9	0.9	0.9	0.9	0.9	1.0	1.0	1.0	1.0	1.0	1.0
421	561	847	6.40	13.60	2.07	—	—	—	—	—	12.7	14.8	15.8	17.3	18.8	19.9	22.4	23.9	24.9	27.5	30.0	32.5	35.0	37.5	41.0
						—	—	—	—	—	0.8	0.9	0.9	0.9	0.9	0.9	0.9	0.9	0.9	0.9	1.0	1.0	1.0	1.0	1.0
420	560	844	5.80	12.40	2.07	—	—	—	—	12.2	14.2	16.3	17.3	18.8	20.3	21.4	23.9	25.4	26.4	28.9	31.4	33.9	36.5	39.0	42.5
						—	—	—	—	0.8	0.9	0.9	0.9	0.9	0.9	0.9	0.9	0.9	0.9	1.0	1.0	1.0	1.0	1.0	1.0
417	556	838	9.40	20.00	2.09	—	—	—	—	—	—	—	—	—	—	—	—	—	17.0	19.6	22.2	24.7	27.3	29.8	33.4
						—	—	—	—	—	—	—	—	—	—	—	—	—	0.9	0.9	0.9	0.9	1.0	1.0	1.0
415	554	835	8.60	18.40	2.09	—	—	—	—	—	—	—	—	—	—	—	16.5	18.0	19.1	21.6	24.2	26.7	29.3	31.8	35.4
						—	—	—	—	—	—	—	—	—	—	—	0.9	0.9	0.9	0.9	0.9	1.0	1.0	1.0	1.0

* Diameters below RMA minimum for other than Cog-Belt V-belts. Use with Super Blue Ribbon or Aramax V-belts will result in reduced life and loss of efficiency.

CLASSICAL SECTION PRE-ENGINEERED DRIVE SELECTION TABLES

B, BP, BK, BX PRE-ENGINEERED TABLES — RATIO 1.76 - 2.09

V-Belt Number and Center Distance (Other sizes may be available, see page 216)															Sheave Datum Diameters		Rated HP per Belt (Includes Added HP for Speed Ratio)								
																	Super Blue Ribbon & Aramax BP & BK RPM of Small Sheave			Super II (B) RPM of Small Sheave			Gold Label Cog-Belt (BX) RPM of Small Sheave		
B 120	B 128	B 136	B 144	B 154	B 158	B 173	B 180	B 195	B 210	B 225	B 240	B 255	B 270	B 300	Small Sheave	Large Sheave	870 RPM	1160 RPM	1750 RPM	870 RPM	1160 RPM	1750 RPM	870 RPM	1160 RPM	1750 RPM
49.4	53.4	57.4	61.4	66.4	68.4	75.9	79.4	86.9	94.4	101.2	108.7	116.2	123.7	138.7	5.20	9.40	4.58	5.72	7.65	5.05	6.33	8.55	5.70	7.15	9.71
1.0	1.0	1.1	1.1	1.1	1.1	1.1	1.1	1.1	1.1	1.1	1.2	1.2	1.2	1.2											
41.9	45.9	49.9	53.9	59.0	61.0	68.5	72.0	79.5	87.0	93.7	101.2	108.7	116.3	131.3	8.60	15.40	9.44	11.80	15.60	9.50	11.87	15.70	9.64	12.01	15.85
1.0	1.0	1.0	1.1	1.1	1.1	1.1	1.1	1.1	1.1	1.1	1.2	1.2	1.2	1.2											
45.7	49.7	53.7	57.8	62.8	64.8	72.3	75.8	83.3	90.8	97.5	105.0	112.5	120.0	135.0	6.80	12.40	6.92	8.67	11.62	7.20	9.03	12.14	7.61	9.53	12.81
1.0	1.0	1.0	1.1	1.1	1.1	1.1	1.1	1.1	1.1	1.1	1.2	1.2	1.2	1.2											
47.5	51.5	55.5	59.5	64.5	66.5	74.0	77.5	85.0	92.5	99.3	106.8	114.3	121.8	136.8	6.00	11.00	5.76	7.22	7.69	6.14	7.70	10.40	6.67	8.36	11.31
1.0	1.0	1.1	1.1	1.1	1.1	1.1	1.1	1.1	1.1	1.1	1.2	1.2	1.2	1.2											
44.3	48.3	52.3	56.3	61.3	63.3	70.8	74.3	81.8	89.4	96.1	103.6	111.1	118.6	133.6	7.40	13.60	7.77	9.74	13.01	7.98	10.00	13.39	8.30	10.38	13.88
1.0	1.0	1.0	1.1	1.1	1.1	1.1	1.1	1.1	1.1	1.1	1.2	1.2	1.2	1.2											
50.5	54.5	58.5	62.5	67.5	69.5	77.0	80.5	88.0	95.5	102.3	109.8	117.3	124.8	139.8	4.60	8.60	3.69	4.57	6.08	4.23	5.28	7.12	4.96	6.23	8.47
1.0	1.0	1.1	1.1	1.1	1.1	1.1	1.1	1.1	1.1	1.1	1.2	1.2	1.2	1.2	*										
49.5	53.5	57.5	61.6	66.6	68.6	76.1	79.6	87.1	94.6	101.3	108.8	116.3	123.8	138.8	5.00	9.40	4.29	5.34	7.14	4.78	5.99	8.09	5.46	6.85	9.31
1.0	1.0	1.1	1.1	1.1	1.1	1.1	1.1	1.1	1.1	1.1	1.2	1.2	1.2	1.2	*										
41.4	45.4	49.4	53.5	58.5	60.5	68.0	71.5	79.0	86.5	93.3	100.8	108.3	115.8	130.8	8.60	16.00	9.44	11.81	15.61	9.51	11.88	15.71	9.65	12.01	15.86
1.0	1.0	1.0	1.1	1.1	1.1	1.1	1.1	1.1	1.1	1.1	1.2	1.2	1.2	1.2											
45.9	49.9	53.9	57.9	62.9	64.9	72.4	75.9	83.4	90.9	97.7	105.2	112.7	120.2	135.2	6.60	12.40	6.64	8.32	11.15	6.94	8.71	11.72	7.38	9.25	12.45
1.0	1.0	1.1	1.1	1.1	1.1	1.1	1.1	1.1	1.1	1.1	1.2	1.2	1.2	1.2											
47.6	51.6	55.6	59.6	64.7	66.7	74.2	77.7	85.2	92.7	99.4	106.9	114.4	121.9	136.9	5.80	11.00	5.48	6.85	9.20	5.88	7.37	9.95	6.44	8.07	10.93
1.0	1.0	1.1	1.1	1.1	1.1	1.1	1.1	1.1	1.1	1.1	1.2	1.2	1.2	1.2											
42.4	46.4	50.4	54.4	59.4	61.4	68.9	72.4	79.9	87.4	94.2	101.7	109.2	116.7	131.7	8.00	15.40	8.62	10.79	14.35	8.76	10.96	14.59	8.99	11.21	14.9?
1.0	1.0	1.0	1.1	1.1	1.1	1.1	1.1	1.1	1.1	1.1	1.2	1.2	1.2	1.2											
46.0	50.0	54.1	58.1	63.1	65.1	72.6	76.1	83.6	91.1	97.8	105.3	112.8	120.3	135.4	6.40	12.40	6.35	7.96	10.68	6.68	8.38	11.30	7.15	8.96	12.??
1.0	1.0	1.1	1.1	1.1	1.1	1.1	1.1	1.1	1.1	1.1	1.2	1.2	1.2	1.2											
49.7	53.7	57.7	61.7	66.7	68.7	76.2	79.7	87.2	94.7	101.5	109.0	116.5	124.0	139.0	4.80	9.40	3.99	4.97	6.62	4.51	5.65	7.62	5.22	6.55	8.90
1.0	1.0	1.1	1.1	1.1	1.1	1.1	1.1	1.1	1.1	1.1	1.2	1.2	1.2	1.2	*										
44.6	48.6	52.6	56.6	61.6	63.6	71.1	74.6	82.2	89.7	96.4	103.9	111.4	118.9	133.9	7.00	13.60	7.21	9.04	12.11	7.47	9.37	12.58	7.85	9.82	13.19
1.0	1.0	1.0	1.1	1.1	1.1	1.1	1.1	1.1	1.1	1.1	1.2	1.2	1.2	1.2											
47.8	51.8	55.8	59.8	64.8	66.8	74.3	77.8	85.3	92.8	99.6	107.1	114.6	122.1	137.1	5.60	11.00	5.19	6.48	8.70	5.61	7.04	9.51	6.20	7.78	10.54
1.0	1.0	1.1	1.1	1.1	1.1	1.1	1.1	1.1	1.1	1.1	1.2	1.2	1.2	1.2											
38.8	42.8	46.8	50.9	55.9	57.9	65.4	68.9	76.4	83.9	90.7	98.2	105.7	113.2	128.2	9.40	18.40	10.53	13.14	17.22	10.50	13.09	17.13	10.52	13.06	17.06
1.0	1.0	1.0	1.1	1.1	1.1	1.1	1.1	1.1	1.1	1.1	1.2	1.2	1.2	1.2											
46.2	50.2	54.5	58.2	63.2	65.2	72.7	76.2	83.7	91.2	98.0	105.5	113.0	120.5	135.5	6.20	12.40	6.07	7.60	10.20	6.42	8.05	10.86	6.92	8.67	11.72
1.0	1.0	1.1	1.1	1.1	1.1	1.1	1.1	1.1	1.1	1.1	1.2	1.2	1.2	1.2											
44.7	48.8	52.8	56.8	61.8	63.8	71.3	74.8	82.3	89.8	96.6	104.1	111.6	119.1	134.1	6.80	13.60	6.93	8.69	11.64	7.21	9.05	12.16	7.62	9.54	12.84
1.0	1.0	1.0	1.1	1.1	1.1	1.1	1.1	1.1	1.1	1.1	1.2	1.2	1.2	1.2											
41.9	45.9	49.9	53.9	58.9	60.9	68.4	71.9	79.4	87.0	93.7	101.2	108.7	116.2	131.2	8.00	16.00	8.62	10.80	14.36	8.76	10.97	14.59	8.99	11.22	14.92
1.0	1.0	1.0	1.1	1.1	1.1	1.1	1.1	1.1	1.1	1.1	1.2	1.2	1.2	1.2											
49.8	53.9	57.9	61.9	66.9	68.9	76.4	79.9	87.4	94.9	101.6	109.1	116.6	124.1	139.1	4.60	9.40	3.70	4.59	6.10	4.24	5.30	7.15	4.97	6.24	8.49
1.0	1.0	1.1	1.1	1.1	1.1	1.1	1.1	1.1	1.1	1.1	1.2	1.2	1.2	1.2	*										
47.9	51.9	55.9	60.0	65.0	67.0	74.5	78.0	85.5	93.0	99.7	107.2	114.7	122.2	137.2	5.40	11.00	4.89	6.11	8.20	5.34	6.70	9.05	5.96	7.48	10.15
1.0	1.0	1.1	1.1	1.1	1.1	1.1	1.1	1.1	1.1	1.1	1.2	1.2	1.2	1.2											
44.9	48.9	52.9	56.9	61.9	63.9	71.4	75.0	82.5	90.0	96.7	104.2	111.7	119.2	134.2	6.60	13.60	6.65	8.33	11.17	6.95	8.72	11.74	7.39	9.26	12.47
1.0	1.0	1.0	1.1	1.1	1.1	1.1	1.1	1.1	1.1	1.1	1.2	1.2	1.2	1.2											
46.3	50.3	54.4	58.4	63.4	65.4	72.9	76.4	83.9	91.4	98.1	105.7	113.2	120.7	135.7	6.00	12.40	5.78	7.23	9.71	6.16	7.72	10.42	6.69	8.38	11.34
1.0	1.0	1.0	1.1	1.1	1.1	1.1	1.1	1.1	1.1	1.1	1.2	1.2	1.2	1.2											
42.8	46.8	50.8	54.8	59.9	61.9	69.4	72.9	80.4	87.9	94.7	102.2	109.7	117.2	132.2	7.40	15.40	7.79	9.76	13.04	8.00	10.02	13.41	8.32	10.40	13.91
1.0	1.0	1.0	1.1	1.1	1.1	1.1	1.1	1.1	1.1	1.1	1.2	1.2	1.2	1.2											
48.1	52.1	56.1	60.1	65.1	67.1	74.6	78.1	85.6	93.1	99.9	107.4	114.9	122.4	137.4	5.20	11.00	4.60	5.74	7.69	5.07	6.36	8.59	5.72	7.18	9.75
1.0	1.0	1.1	1.1	1.1	1.1	1.1	1.1	1.1	1.1	1.1	1.2	1.2	1.2	1.2	*										
45.0	49.1	53.1	57.1	62.1	64.1	71.6	75.1	82.6	90.1	96.9	104.4	111.9	119.4	134.4	6.40	13.60	6.36	7.97	10.70	6.69	8.39	11.31	7.16	8.97	12.11
1.0	1.0	1.0	1.1	1.1	1.1	1.1	1.1	1.1	1.1	1.1	1.2	1.2	1.2	1.2											
46.5	50.5	54.5	58.5	63.5	65.5	73.0	76.5	84.0	91.5	98.3	105.8	113.3	120.8	135.8	5.80	12.40	5.49	6.87	9.22	5.89	7.39	9.98	6.45	8.09	10.95
1.0	1.0	1.0	1.1	1.1	1.1	1.1	1.1	1.1	1.1	1.1	1.2	1.2	1.2	1.2											
37.4	41.5	45.5	49.5	54.6	56.6	64.1	67.6	75.1	82.6	89.4	96.9	104.4	111.9	126.9	9.40	20.00	10.54	13.15	17.23	10.51	13.10	17.15	10.52	13.07	17.08
1.0	1.0	1.0	1.0	1.1	1.1	1.1	1.1	1.1	1.1	1.1	1.1	1.2	1.2	1.2											
39.4	43.4	47.4	51.5	56.5	58.5	66.0	69.5	77.0	84.6	91.3	98.8	106.3	113.8	128.9	8.60	18.40	9.46	11.83	15.64	9.52	11.90	15.74	9.66	12.03	15.89
1.0	1.0	1.0	1.0	1.1	1.1	1.1	1.1	1.1	1.1	1.1	1.1	1.2	1.2	1.2											

* Diameters below RMA minimum for other than Cog-Belt V-belts. Use with Super Blue Ribbon or Aramax V-belts will result in reduced life and loss of efficiency.

CLASSICAL SECTION PRE-ENGINEERED DRIVE SELECTION TABLES

B, BP, BK, BX PRE-ENGINEERED TABLES RATIO 2.11 - 2.48

Driven Speed for Motor Speed of			Sheave Datum Diameters		V-Belt Number and Center Distance (other sizes may be available, see page 216)																					
870 RPM	1160 RPM	1750 RPM	Small Sheave	Large Sheave	Speed Ratio	B 35	B 38	B 42	B 46	B 52	B 56	B 60	B 62	B 65	B 68	B 70	B 75	B 78	B 80	B 85	B 90	B 95	B 100	B 105	B 112
412	550	830	7.40	16.00	2.11	—	—	—	—	—	—	—	—	14.4	15.9	17.0	19.5	21.1	22.1	24.6	27.2	29.7	32.2	34.8	38.3
						—	—	—	—	—	—	—	—	0.9	0.9	0.9	0.9	0.9	0.9	0.9	1.0	1.0	1.0	1.0	1.0
410	547	825	5.00	11.00	2.12	—	—	—	10.9	14.0	16.1	18.1	19.1	20.6	22.1	23.1	25.7	27.2	28.2	30.7	33.2	35.7	38.2	40.7	44.2
			*			—	—	—	0.8	0.8	0.9	0.9	0.9	0.9	0.9	0.9	0.9	0.9	0.9	1.0	1.0	1.0	1.0	1.0	1.0
408	545	822	6.20	13.60	2.13	—	—	—	—	—	12.8	14.9	15.9	17.5	19.0	20.0	22.5	24.1	25.1	27.6	30.1	32.6	35.2	37.7	41.2
						—	—	—	—	—	0.8	0.9	0.9	0.9	0.9	0.9	0.9	0.9	0.9	0.9	1.0	1.0	1.0	1.0	1.0
406	541	817	7.00	15.40	2.14	—	—	—	—	—	—	—	13.7	15.2	16.8	17.8	20.4	21.9	22.9	25.5	28.0	30.5	33.0	35.6	39.1
						—	—	—	—	—	—	—	0.8	0.9	0.9	0.9	0.9	0.9	0.9	0.9	1.0	1.0	1.0	1.0	1.0
406	541	817	5.60	12.40	2.14	—	—	—	—	12.3	14.4	16.4	17.4	19.0	20.5	21.5	24.0	25.5	26.5	29.1	31.6	34.1	36.6	39.1	42.9
						—	—	—	—	0.8	0.8	0.9	0.9	0.9	0.9	0.9	0.9	0.9	0.9	1.0	1.0	1.0	1.0	1.0	1.0
396	528	797	6.00	13.60	2.20	—	—	—	—	—	12.9	15.0	16.1	17.6	19.1	20.1	22.7	24.2	25.2	27.7	30.3	32.8	35.3	37.8	41.3
						—	—	—	—	—	0.8	0.9	0.9	0.9	0.9	0.9	0.9	0.9	0.9	0.9	1.0	1.0	1.0	1.0	1.0
395	527	794	6.80	15.40	2.20	—	—	—	—	—	—	12.7	13.8	15.4	16.9	17.9	20.5	22.0	23.1	25.6	28.1	30.7	33.2	35.7	39.2
						—	—	—	—	—	—	0.8	08	0.9	0.9	0.9	0.9	0.9	0.9	0.9	1.0	1.0	1.0	1.0	1.0
395	526	794	4.80	11.00	2.20	—	—	—	11.1	14.2	16.2	18.2	19.2	20.8	22.3	23.3	25.8	27.3	28.3	30.8	33.3	35.9	38.4	40.9	44.4
			*			—	—	—	0.8	0.8	0.9	0.9	0.9	0.9	0.9	0.9	0.9	0.9	0.9	1.0	1.0	1.0	1.0	1.0	1.0
392	523	789	5.40	12.40	2.22	—	—	—	—	12.4	14.5	16.5	17.6	19.1	20.6	21.6	24.2	25.7	28.7	29.2	31.7	34.2	36.8	39.3	42.8
						—	—	—	—	0.8	0.8	0.9	0.9	0.9	0.9	0.9	0.9	0.9	0.9	1.0	1.0	1.0	1.0	1.0	1.0
391	521	787	7.00	16.00	2.22	—	—	—	—	—	—	—	13.1	14.6	16.2	17.2	19.8	21.4	22.4	24.9	27.5	30.0	32.5	35.0	38.6
						—	—	—	—	—	—	—	08	0.9	0.9	0.9	0.9	0.9	0.9	0.9	0.9	1.0	1.0	1.0	1.0
387	517	779	8.00	18.40	2.25	—	—	—	—	—	—	—	—	—	—	—	16.9	18.4	19.5	22.1	24.6	27.2	29.7	32.2	35.8
						—	—	—	—	—	—	—	—	—	—	—	0.9	0.9	0.9	0.9	0.9	0.9	1.0	1.0	1.0
384	512	772	6.60	15.40	2.27	—	—	—	—	—	—	12.9	13.9	15.5	17.1	18.1	20.7	22.2	23.2	25.7	28.3	30.8	33.3	35.9	39.4
						—	—	—	—	—	—	0.8	08	0.9	0.9	0.9	0.9	0.9	0.9	0.9	1.0	1.0	1.0	1.0	1.0
384	511	772	5.80	13.60	2.27	—	—	—	—	—	13.1	15.2	16.2	17.7	19.3	20.3	22.8	24.4	25.4	27.9	30.4	32.9	35.4	38.0	41.5
						—	—	—	—	—	0.8	0.9	0.9	0.9	0.9	0.9	0.9	0.9	0.9	0.9	0.9	1.0	1.0	1.0	1.0
383	510	770	8.60	20.00	2.27	—	—	—	—	—	—	—	—	—	—	—	—	16.5	17.5	20.1	22.7	25.3	27.9	30.4	34.0
						—	—	—	—	—	—	—	—	—	—	—	—	0.9	0.9	0.9	0.9	0.9	1.0	1.0	1.0
380	507	765	6.80	16.00	2.29	—	—	—	—	—	—	—	13.2	14.8	16.3	17.4	20.0	21.5	22.5	25.1	27.6	30.1	32.7	35.2	38.7
						—	—	—	—	—	—	—	0.8	0.8	0.9	0.9	0.9	0.9	0.9	0.9	0.9	1.0	1.0	1.0	1.0
379	506	763	4.60	11.00	2.29	—	—	—	11.2	14.3	16.3	18.4	19.4	20.9	22.4	23.4	26.0	27.5	28.5	31.0	33.5	36.0	38.5	41.0	44.5
			*			—	—	—	0.8	0.8	0.9	0.9	0.9	0.9	0.9	0.9	0.9	0.9	0.9	1.0	1.0	1.0	1.0	1.0	1.0
379	505	762	5.20	12.40	2.30	—	—	—	—	12.6	14.6	16.7	17.7	19.2	20.8	21.8	24.3	25.8	26.8	29.4	31.9	34.4	36.9	39.4	42.9
			*			—	—	—	—	0.8	0.8	0.9	0.9	0.9	0.9	0.9	0.9	0.9	0.9	1.0	1.0	1.0	1.0	1.0	1.0
373	497	750	6.40	15.40	2.33	—	—	—	—	—	—	13.0	14.1	15.6	17.2	18.2	20.8	22.3	23.3	25.9	28.4	31.0	33.5	36.0	39.5
						—	—	—	—	—	—	0.8	0.8	0.9	0.9	0.9	0.9	0.9	0.9	0.9	1.0	1.0	1.0	1.0	1.0
371	495	746	5.60	13.60	2.34	—	—	—	—	—	13.2	15.3	16.3	17.9	19.4	20.4	23.0	24.5	25.5	28.0	30.6	33.1	35.6	38.1	41.6
						—	—	—	—	—	0.8	0.9	0.9	0.9	0.9	0.9	0.9	0.9	0.9	0.9	1.0	1.0	1.0	1.0	1.0
370	493	744	6.60	16.00	2.35	—	—	—	—	—	—	—	13.3	14.9	16.5	17.5	20.1	21.6	22.7	25.2	27.8	30.3	32.8	35.3	38.9
						—	—	—	—	—	—	—	0.8	0.8	0.9	0.9	0.9	0.9	0.9	0.9	0.9	1.0	1.0	1.0	1.0
365	4.87	734	5.00	12.40	2.38	—	—	—	—	12.7	14.8	16.8	17.9	19.4	20.9	21.9	24.5	26.0	27.0	29.5	32.0	34.5	37.0	39.6	43.1
			*			—	—	—	—	0.8	0.8	0.9	0.9	0.9	0.9	0.9	0.9	0.9	0.9	1.0	1.0	1.0	1.0	1.0	1.0
362	482	728	6.20	15.40	2.40	—	—	—	—	—	—	13.1	14.2	15.8	17.3	18.4	20.9	22.5	23.5	26.0	28.6	31.1	33.6	36.1	39.7
						—	—	—	—	—	—	0.8	0.8	0.9	0.9	0.9	0.9	0.9	0.9	0.9	1.0	1.0	1.0	1.0	1.0
360	479	723	7.40	18.40	2.42	—	—	—	—	—	—	—	—	—	—	14.6	17.3	18.8	19.9	22.5	25.0	27.6	30.1	32.7	36.2
						—	—	—	—	—	—	—	—	—	—	0.8	0.9	0.9	0.9	0.9	0.9	0.9	1.0	1.0	1.0
359	479	722	6.40	16.00	2.42	—	—	—	—	—	—	—	13.5	15.0	16.6	17.7	20.2	21.8	22.8	25.4	27.9	30.4	33.0	35.5	39.0
						—	—	—	—	—	—	—	0.8	0.8	0.9	0.9	0.9	0.9	0.9	0.9	0.9	1.0	1.0	1.0	1.0
359	478	721	5.40	13.60	2.43	—	—	—	—	11.2	13.3	15.4	16.5	18.0	19.5	20.6	23.1	24.6	25.6	28.2	30.7	33.2	35.7	38.3	41.8
						—	—	—	—	0.8	0.8	0.9	0.9	0.9	0.9	0.9	0.9	0.9	0.9	0.9	1.0	1.0	1.0	1.0	1.0
357	476	718	8.00	20.00	2.44	—	—	—	—	—	—	—	—	—	—	—	—	16.8	17.9	20.5	23.1	25.7	28.3	30.8	34.4
						—	—	—	—	—	—	—	—	—	—	—	—	0.9	0.9	0.9	0.9	0.9	1.0	1.0	1.0
351	469	707	4.80	12.40	2.48	—	—	—	—	12.8	14.9	17.0	18.0	19.5	21.0	22.1	24.6	26.1	27.1	29.6	32.2	34.7	37.2	39.7	43.2
			*			—	—	—	—	0.8	0.8	0.9	0.9	0.9	0.9	0.9	0.9	0.9	0.9	1.0	1.0	1.0	1.0	1.0	1.0
351	468	706	6.00	15.40	2.48	—	—	—	—	—	—	13.3	14.3	15.9	17.5	18.5	21.1	22.6	23.6	26.2	28.7	31.2	33.8	36.3	39.8
						—	—	—	—	—	—	0.8	0.8	0.9	0.9	0.9	0.9	0.9	0.9	0.9	0.9	1.0	1.0	1.0	1.0

* Diameters below RMA minimum for other than Cog-Belt V-belts. Use with Super Blue Ribbon or Aramax V-belts will result in reduced life and loss of efficiency.

CLASSICAL SECTION PRE-ENGINEERED DRIVE SELECTION TABLES

B, BP, BK, BX PRE-ENGINEERED TABLES — RATIO 2.11 - 2.48

V-Belt Number and Center Distance (Other sizes may be available, see page 216)															Sheave Datum Diameters		Rated HP per Belt (Includes Added HP for Speed Ratio)								
																	Super Blue Ribbon & Aramax BP & BK RPM of Small Sheave			Super II (B) RPM of Small Sheave			Gold Label Cog-Belt (BX) RPM of Small Sheave		
B 120	B 128	B 136	B 144	B 154	B 158	B 173	B 180	B 195	B 210	B 225	B 240	B 255	B 270	B 300	Small Sheave	Large Sheave	870 RPM	1160 RPM	1750 RPM	870 RPM	1160 RPM	1750 RPM	870 RPM	1160 RPM	1750 RPM
42.3	46.3	50.3	54.4	59.4	61.4	68.9	72.4	79.9	87.4	94.2	101.7	109.2	116.7	131.7	7.40	16.00	7.79	9.76	13.04	8.00	10.03	13.42	8.32	10.40	13.92
1.0	1.0	1.0	1.1	1.1	1.1	1.1	1.1	1.1	1.1	1.1	1.2	1.2	1.2	1.2											
48.2	52.2	56.3	60.3	65.3	67.3	74.8	78.3	85.8	93.3	100.0	107.5	115.0	122.5	137.6	5.00	11.00	4.30	5.36	7.17	4.80	6.01	8.12	5.48	6.87	9.34
1.0	1.0	1.1	1.1	1.1	1.1	1.1	1.1	1.1	1.1	1.1	1.2	1.2	1.2	1.2	*										
45.2	49.2	53.2	57.2	62.2	64.2	71.8	75.3	82.8	90.3	97.0	104.5	112.0	119.5	134.5	6.20	13.60	6.07	7.61	10.22	6.43	8.06	10.88	6.93	8.68	11.73
1.0	1.0	1.0	1.1	1.1	1.1	1.1	1.1	1.1	1.1	1.1	1.2	1.2	1.2	1.2											
43.1	47.1	51.1	55.1	60.2	62.2	69.7	73.2	80.7	88.2	95.0	102.5	110.0	117.5	132.5	7.00	15.40	7.92	9.06	12.13	7.48	9.38	12.60	7.86	9.84	13.21
1.0	1.0	1.0	1.1	1.1	1.1	1.1	1.1	1.1	1.1	1.1	1.2	1.2	1.2	1.2											
46.6	50.6	54.7	58.7	63.7	65.7	73.2	76.7	84.2	91.7	98.5	106.0	113.5	121.0	136.0	5.60	12.40	5.20	6.50	8.72	5.62	7.05	9.53	6.21	7.79	10.56
1.0	1.0	1.0	1.1	1.1	1.1	1.1	1.1	1.1	1.1	1.1	1.2	1.2	1.2	1.2											
45.3	49.4	53.4	57.4	62.4	64.4	71.9	75.4	82.9	90.4	97.2	104.7	112.2	119.7	134.7	6.00	13.60	5.79	7.24	9.73	6.16	7.73	10.44	6.69	8.39	11.35
1.0	1.0	1.0	1.1	1.1	1.1	1.1	1.1	1.1	1.1	1.1	1.2	1.2	1.2	1.2											
43.3	47.3	51.3	55.3	60.3	62.3	69.8	73.3	80.8	88.4	95.1	102.6	110.1	117.6	132.6	6.80	15.40	6.94	8.70	11.66	7.22	9.06	12.18	7.63	9.56	12.86
1.0	1.0	1.0	1.1	1.1	1.1	1.1	1.1	1.1	1.1	1.1	1.2	1.2	1.2	1.2											
48.4	52.4	56.4	60.4	65.4	67.4	74.9	78.4	85.9	93.4	100.2	107.7	115.2	122.7	137.7	4.80	11.00	4.01	4.98	6.65	4.53	5.66	7.65	5.23	6.56	8.93
1.0	1.0	1.1	1.1	1.1	1.1	1.1	1.1	1.1	1.1	1.1	1.2	1.2	1.2	1.2	*										
46.8	50.8	54.8	58.8	63.8	65.8	73.3	76.8	84.3	91.9	98.6	106.1	113.6	121.1	136.1	5.40	12.40	4.90	6.13	8.21	5.35	6.71	9.07	5.97	7.49	10.17
1.0	1.0	1.0	1.1	1.1	1.1	1.1	1.1	1.1	1.1	1.1	1.2	1.2	1.2	1.2											
42.6	46.6	50.6	54.7	59.7	61.7	69.2	72.7	80.2	87.7	94.5	102.0	109.5	117.0	132.0	7.00	16.00	7.23	9.06	12.13	7.49	9.39	12.60	7.87	9.84	13.22
1.0	1.0	1.0	1.1	1.1	1.1	1.1	1.1	1.1	1.1	1.1	1.2	1.2	1.2	1.2											
39.8	43.9	47.9	51.9	56.9	58.9	66.5	70.0	77.5	85.0	91.8	99.3	106.8	114.3	129.3	8.00	18.40	8.63	10.81	14.38	8.77	10.98	14.62	9.00	11.23	14.94
1.0	1.0	1.0	1.0	1.1	1.1	1.1	1.1	1.1	1.1	1.1	1.1	1.2	1.2	1.2											
43.4	47.4	51.4	55.4	60.5	62.5	70.0	73.5	81.0	88.5	95.3	102.8	110.3	117.8	132.8	6.60	15.40	6.56	8.34	11.19	6.96	8.73	11.76	7.40	9.27	12.49
1.0	1.0	1.0	1.1	1.1	1.1	1.1	1.1	1.1	1.1	1.1	1.2	1.2	1.2	1.2											
45.5	49.5	53.5	57.5	62.5	64.5	72.1	75.6	83.1	90.6	97.3	104.8	112.3	119.8	134.9	5.80	13.60	5.49	6.88	9.23	5.90	7.40	9.99	6.46	8.10	10.97
1.0	1.0	1.0	1.1	1.1	1.1	1.1	1.1	1.1	1.1	1.1	1.2	1.2	1.2	1.2											
38.0	42.1	46.1	50.1	55.1	57.2	64.7	68.2	75.7	83.2	90.0	97.5	105.0	112.5	127.6	8.60	20.00	9.46	11.84	15.65	9.53	11.91	15.75	9.67	12.04	15.90
1.0	1.0	1.0	1.0	1.1	1.1	1.1	1.1	1.1	1.1	1.1	1.1	1.2	1.2	1.2											
42.7	46.8	50.8	54.8	59.8	61.8	69.3	72.8	80.4	87.9	94.6	102.1	109.6	117.2	132.2	6.80	16.00	6.94	8.70	11.67	7.23	9.06	12.19	7.64	9.56	12.86
1.0	1.0	1.0	1.1	1.1	1.1	1.1	1.1	1.1	1.1	1.1	1.1	1.2	1.2	1.2											
48.5	52.6	56.6	60.6	65.6	67.6	75.1	78.6	86.1	93.6	100.3	107.9	115.4	122.9	137.9	4.60	11.00	3.71	4.60	6.12	4.25	5.31	7.17	4.99	6.25	8.51
1.0	1.0	1.1	1.1	1.1	1.1	1.1	1.1	1.1	1.1	1.1	1.2	1.2	1.2	1.2	*										
46.9	50.9	55.0	59.0	64.0	66.0	73.5	77.0	84.5	92.0	98.8	106.3	113.8	121.3	136.3	5.20	12.40	4.61	5.75	7.70	5.08	6.37	8.61	5.73	7.19	9.77
1.0	1.0	1.0	1.1	1.1	1.1	1.1	1.1	1.1	1.1	1.1	1.2	1.2	1.2	1.2	*										
43.5	47.6	51.6	55.6	60.6	62.6	70.1	73.6	81.2	88.7	95.4	102.9	110.4	117.9	133.0	6.40	15.40	6.37	7.98	10.71	6.70	8.41	11.33	7.17	8.98	12.12
1.0	1.0	1.0	1.1	1.1	1.1	1.1	1.1	1.1	1.1	1.1	1.2	1.2	1.2	1.2											
45.6	49.7	53.7	57.7	62.7	64.7	72.2	75.7	83.2	90.7	97.5	105.0	112.5	120.0	135.0	5.60	13.60	5.20	6.51	8.73	5.63	7.06	9.54	6.22	7.80	10.58
1.0	1.0	1.0	1.1	1.1	1.1	1.1	1.1	1.1	1.1	1.1	1.2	1.2	1.2	1.2											
42.9	46.9	50.9	54.9	60.0	62.0	69.5	73.0	80.5	88.0	94.8	102.3	109.8	117.3	132.3	6.60	16.00	6.66	8.35	11.20	6.96	8.74	11.76	7.41	9.27	12.50
1.0	1.0	1.0	1.1	1.1	1.1	1.1	1.1	1.1	1.1	1.1	1.1	1.2	1.2	1.2											
47.1	51.1	55.1	59.1	64.1	66.1	73.6	77.1	84.7	92.2	98.9	106.4	113.9	121.4	136.4	5.00	12.40	4.31	5.37	7.19	4.81	6.02	8.14	5.49	6.88	9.36
1.0	1.0	1.0	1.1	1.1	1.1	1.1	1.1	1.1	1.1	1.1	1.2	1.2	1.2	1.2	*										
43.7	47.7	51.7	55.7	60.8	62.8	70.3	73.8	81.3	88.8	95.6	103.1	110.6	118.1	133.1	6.20	15.40	6.08	7.62	10.23	6.43	8.07	10.89	6.94	8.69	11.75
1.0	1.0	1.0	1.1	1.1	1.1	1.1	1.1	1.1	1.1	1.1	1.1	1.2	1.2	1.2											
40.3	44.3	48.3	52.3	57.4	59.4	66.9	70.4	77.9	85.5	92.2	99.7	107.2	114.8	129.8	7.40	18.40	7.80	9.77	13.06	8.01	10.04	13.44	8.33	10.41	13.93
1.0	1.0	1.0	1.0	1.1	1.1	1.1	1.1	1.1	1.1	1.1	1.1	1.2	1.2	1.2											
43.0	47.1	51.1	55.1	60.1	62.1	69.6	73.1	80.7	88.2	94.9	102.4	110.0	117.5	132.5	6.40	16.00	6.37	7.98	10.72	6.70	8.41	11.33	7.17	8.99	12.13
1.0	1.0	1.0	1.1	1.1	1.1	1.1	1.1	1.1	1.1	1.1	1.1	1.2	1.2	1.2											
45.8	49.8	53.8	57.8	62.8	64.8	72.4	75.9	83.4	90.9	97.6	105.1	112.7	120.2	135.2	5.40	13.60	4.91	6.13	8.23	5.36	6.72	9.08	5.98	7.50	10.18
1.0	1.0	1.0	1.1	1.1	1.1	1.1	1.1	1.1	1.1	1.1	1.2	1.2	1.2	1.2											
38.4	42.5	46.5	50.6	55.6	57.6	65.1	68.6	76.2	83.7	90.5	98.0	105.5	113.0	128.0	8.00	20.00	8.64	10.82	14.39	8.78	10.99	14.63	9.01	11.24	14.95
1.0	1.0	1.0	1.0	1.1	1.1	1.1	1.1	1.1	1.1	1.1	1.1	1.2	1.2	1.2											
47.2	51.3	55.3	59.3	64.3	66.3	73.8	77.3	84.8	92.3	99.1	106.6	114.1	121.6	136.6	4.80	12.40	4.01	4.99	6.66	4.53	5.67	7.66	5.24	6.57	8.94
1.0	1.0	1.0	1.1	1.1	1.1	1.1	1.1	1.1	1.1	1.1	1.2	1.2	1.2	1.2	*										
43.8	47.9	51.9	55.9	60.9	62.9	70.4	73.9	81.5	89.0	95.7	103.2	110.7	118.2	133.3	6.00	15.40	5.79	7.25	9.74	6.17	7.74	10.45	6.70	8.40	11.37
1.0	1.0	1.0	1.1	1.1	1.1	1.1	1.1	1.1	1.1	1.1	1.1	1.2	1.2	1.2											

* Diameters below RMA minimum for other than Cog-Belt V-belts. Use with Super Blue Ribbon or Aramax V-belts will result in reduced life and loss of efficiency.

CLASSICAL SECTION PRE-ENGINEERED DRIVE SELECTION TABLES

B, BP, BK, BX PRE-ENGINEERED TABLES RATIO 2.50 - 2.95

Driven Speed for Motor Speed of			Sheave Datum Diameters		V-Belt Number and Center Distance (other sizes may be available, see page 216)																					
870 RPM	1160 RPM	1750 RPM	Small Sheave	Large Sheave	Speed Ratio	B 35	B 38	B 42	B 46	B 52	B 56	B 60	B 62	B 65	B 68	B 70	B 75	B 78	B 80	B 85	B 90	B 95	B 100	B 105	B 112
349	465	701	6.20	16.00	2.50	—	—	—	—	—	—	—	13.6	15.2	16.7	17.8	20.4	21.9	22.9	25.5	28.0	30.6	33.1	35.6	39.2
						—	—	—	—	—	—	—	0.8	0.8	0.9	0.9	0.9	0.9	0.9	0.9	0.9	1.0	1.0	1.0	1.0
346	462	696	5.20	13.60	2.51	—	—	—	—	11.4	13.5	15.6	16.6	18.1	19.7	20.7	23.3	24.8	25.8	28.3	30.8	33.4	34.9	38.4	41.9
			*			—	—	—	—	0.8	0.8	0.9	0.9	0.9	0.9	0.9	0.9	0.9	0.9	0.9	1.0	1.0	1.0	1.0	1.0
341	455	686	7.00	18.40	2.55	—	—	—	—	—	—	—	—	—	—	14.9	17.5	19.1	20.1	22.7	25.3	27.9	30.4	33.0	36.5
						—	—	—	—	—	—	—	—	—	—	0.8	0.9	0.9	0.9	0.9	0.9	0.9	1.0	1.0	1.0
340	453	683	5.80	15.40	2.56	—	—	—	—	—	—	13.4	14.5	16.0	17.6	18.6	21.2	22.7	23.8	26.3	28.9	31.4	33.9	36.4	40.0
						—	—	—	—	—	—	0.8	0.8	0.9	0.9	0.9	0.9	0.9	0.9	0.9	0.9	1.0	1.0	1.0	1.0
338	451	680	6.00	16.00	2.57	—	—	—	—	—	—	12.6	13.7	15.3	16.9	17.9	20.5	22.1	23.1	25.6	28.2	30.7	33.2	35.8	39.3
						—	—	—	—	—	—	0.8	0.8	0.8	0.9	0.9	0.9	0.9	0.9	0.9	0.9	1.0	1.0	1.0	1.0
338	450	679	4.60	12.40	2.58	—	—	—	—	13.0	15.0	17.1	18.1	19.7	21.2	22.2	24.7	26.3	27.3	29.8	32.3	34.8	37.3	39.9	43.4
			*			—	—	—	—	0.8	0.8	0.9	0.9	0.9	0.9	0.9	0.9	0.9	0.9	0.9	1.0	1.0	1.0	1.0	1.0
335	446	673	9.40	25.00	2.60	—	—	—	—	—	—	—	—	—	—	—	—	—	—	—	—	19.8	22.5	25.2	28.8
						—	—	—	—	—	—	—	—	—	—	—	—	—	—	—	—	0.9	0.9	0.9	0.9
334	445	671	5.00	13.60	2.61	—	—	—	—	11.5	13.6	15.7	16.7	18.3	19.8	20.8	23.4	24.9	25.9	28.5	31.0	33.5	36.0	38.6	42.1
			*			—	—	—	—	0.8	0.8	0.8	0.9	0.9	0.9	0.9	0.9	0.9	0.9	0.9	1.0	1.0	1.0	1.0	1.0
332	442	667	6.80	18.40	2.62	—	—	—	—	—	—	—	—	—	—	15.0	17.7	19.2	20.3	22.9	25.4	28.0	30.6	33.1	36.6
						—	—	—	—	—	—	—	—	—	—	0.8	0.9	0.9	0.9	0.9	0.9	0.9	1.0	1.0	1.0
331	442	666	7.40	20.00	2.63	—	—	—	—	—	—	—	—	—	—	—	15.6	17.2	18.3	20.9	23.5	26.1	28.7	31.2	34.8
						—	—	—	—	—	—	—	—	—	—	—	0.8	0.9	0.9	0.9	0.9	0.9	0.9	1.0	1.0
329	438	661	5.60	15.40	2.65	—	—	—	—	—	—	13.5	14.6	16.2	17.7	18.8	21.3	22.9	23.9	26.5	29.0	31.5	34.1	36.6	40.1
						—	—	—	—	—	—	0.8	0.8	0.9	0.9	0.9	0.9	0.9	0.9	0.9	0.9	1.0	1.0	1.0	1.0
327	436	658	5.80	16.00	2.66	—	—	—	—	—	—	12.8	13.8	15.4	17.0	18.1	20.6	22.2	23.2	25.8	28.3	30.9	33.4	35.9	39.4
						—	—	—	—	—	—	0.8	0.8	0.8	0.9	0.9	0.9	0.9	0.9	0.9	0.9	1.0	1.0	1.0	1.0
322	430	649	6.60	18.40	2.70	—	—	—	—	—	—	—	—	—	14.0	15.1	17.8	19.4	20.4	23.0	25.6	28.1	30.7	33.2	36.8
						—	—	—	—	—	—	—	—	—	0.8	0.8	0.9	0.9	0.9	0.9	0.9	0.9	1.0	1.0	1.0
321	428	646	4.80	13.60	2.71	—	—	—	—	11.6	13.7	15.8	16.9	18.4	20.0	21.0	23.5	25.1	26.1	28.6	31.1	33.7	36.2	38.7	42.2
			*			—	—	—	—	0.8	0.8	0.8	0.9	0.9	0.9	0.9	0.9	0.9	0.9	0.9	1.0	1.0	1.0	1.0	1.0
318	423	639	5.40	15.40	2.74	—	—	—	—	—	—	13.6	14.7	16.3	17.9	18.9	21.5	23.0	24.0	26.6	29.1	31.7	34.2	36.7	4.03
						—	—	—	—	—	—	0.8	0.8	0.9	0.9	0.9	0.9	0.9	0.9	0.9	0.9	1.0	1.0	1.0	1.0
317	422	637	5.60	16.00	2.75	—	—	—	—	—	—	12.9	14.0	15.6	17.1	18.2	20.8	22.3	23.4	25.9	28.5	31.0	33.5	36.1	39.6
						—	—	—	—	—	—	0.8	0.8	0.8	0.9	0.9	0.9	0.9	0.9	0.9	0.9	1.0	1.0	1.0	1.0
314	419	632	7.00	20.00	2.77	—	—	—	—	—	—	—	—	—	—	—	15.9	17.5	18.6	21.2	23.8	26.4	29.0	31.5	35.1
						—	—	—	—	—	—	—	—	—	—	—	0.8	0.9	0.9	0.9	0.9	0.9	0.9	1.0	1.0
313	418	630	6.40	18.40	2.78	—	—	—	—	—	—	—	—	—	14.2	15.2	17.9	19.5	20.5	23.1	25.7	28.3	30.8	33.4	36.9
						—	—	—	—	—	—	—	—	—	0.8	0.8	0.9	0.9	0.9	0.9	0.9	0.9	1.0	1.0	1.0
309	412	621	4.60	13.60	2.82	—	—	—	—	11.7	13.9	16.0	17.0	18.6	20.1	21.1	23.7	25.2	26.2	28.8	31.3	33.8	36.3	38.8	42.4
			*			—	—	—	—	0.8	0.8	0.8	0.9	0.9	0.9	0.9	0.9	0.9	0.9	0.9	1.0	1.0	1.0	1.0	1.0
307	410	618	8.60	25.00	2.83	—	—	—	—	—	—	—	—	—	—	—	—	—	—	—	—	20.4	23.1	25.7	29.4
						—	—	—	—	—	—	—	—	—	—	—	—	—	—	—	—	0.9	0.9	0.9	0.9
307	409	617	5.20	15.40	2.84	—	—	—	—	—	—	13.8	14.8	16.4	18.0	19.0	21.6	23.2	24.2	26.7	29.3	31.8	34.3	36.9	40.4
			*			—	—	—	—	—	—	0.8	0.8	0.8	0.9	0.9	0.9	0.9	0.9	0.9	0.9	1.0	1.0	1.0	1.0
306	408	615	5.40	16.00	2.84	—	—	—	—	—	—	13.0	14.1	15.7	17.3	18.3	20.9	22.5	23.5	26.1	28.6	31.1	33.7	36.2	39.7
						—	—	—	—	—	—	0.8	0.8	0.8	0.9	0.9	0.9	0.9	0.9	0.9	0.9	1.0	1.0	1.0	1.0
306	408	615	6.80	20.00	2.85	—	—	—	—	—	—	—	—	—	—	—	16.0	17.6	18.7	21.3	23.9	26.5	29.1	31.7	35.2
						—	—	—	—	—	—	—	—	—	—	—	0.8	0.9	0.9	0.9	0.9	0.9	0.9	1.0	1.0
304	405	611	6.20	18.40	2.86	—	—	—	—	—	—	—	—	—	14.3	15.4	18.0	19.6	20.7	23.3	25.9	28.4	31.0	33.5	37.1
						—	—	—	—	—	—	—	—	—	0.8	0.8	0.9	0.9	0.9	0.9	0.9	0.9	1.0	1.0	1.0
297	396	598	6.60	20.00	2.93	—	—	—	—	—	—	—	—	—	—	—	16.1	17.7	18.8	21.5	24.1	26.7	29.2	31.8	35.4
						—	—	—	—	—	—	—	—	—	—	—	0.8	0.9	0.9	0.9	0.9	0.9	0.9	1.0	1.0
296	394	594	5.00	15.40	2.94	—	—	—	—	—	11.7	13.9	15.0	16.6	18.1	19.2	21.8	23.3	24.3	26.9	29.4	32.0	34.5	37.0	40.5
			*			—	—	—	—	—	0.8	0.8	0.8	0.8	0.9	0.9	0.9	0.9	0.9	0.9	0.9	1.0	1.0	1.0	1.0
295	394	594	5.20	16.00	2.95	—	—	—	—	—	—	13.1	14.2	15.8	17.4	18.5	21.1	22.6	23.6	26.2	28.7	31.3	33.8	36.3	39.9
			*			—	—	—	—	—	—	0.8	0.8	0.8	0.9	0.9	0.9	0.9	0.9	0.9	0.9	1.0	1.0	1.0	1.0
295	393	593	6.00	18.40	2.95	—	—	—	—	—	—	—	—	—	14.4	15.5	18.2	19.8	20.8	23.4	26.0	28.6	31.1	33.7	37.2
						—	—	—	—	—	—	—	—	—	0.8	0.8	0.9	0.9	0.9	0.9	0.9	0.9	1.0	1.0	1.0

* Diameters below RMA minimum for other than Cog-Belt V-belts. Use with Super Blue Ribbon or Aramax V-belts will result in reduced life and loss of efficiency.

CLASSICAL SECTION PRE-ENGINEERED DRIVE SELECTION TABLES

B, BP, BK, BX PRE-ENGINEERED TABLES — RATIO 2.50 - 2.95

V-Belt Number and Center Distance (Other sizes may be available, see page 216)															Sheave Datum Diameters		Rated HP per Belt (Includes Added HP for Speed Ratio)								
																	Super Blue Ribbon & Aramax BP & BK RPM of Small Sheave			Super II (B) RPM of Small Sheave			Gold Label Cog-Belt (BX) RPM of Small Sheave		
B 120	B 128	B 136	B 144	B 154	B 158	B 173	B 180	B 195	B 210	B 225	B 240	B 255	B 270	B 300	Small Sheave	Large Sheave	870 RPM	1160 RPM	1750 RPM	870 RPM	1160 RPM	1750 RPM	870 RPM	1160 RPM	1750 RPM
43.2	47.2	51.2	55.2	60.3	62.3	69.8	73.3	80.8	88.6	95.1	102.6	110.1	117.6	132.6	6.20	16.00	6.08	7.62	10.23	6.44	8.08	10.90	6.94	8.70	11.75
1.0	1.0	1.0	1.1	1.1	1.1	1.1	1.1	1.1	1.1	1.1	1.1	1.2	1.2	1.2											
45.9	50.0	54.0	58.0	63.0	65.0	72.5	76.0	83.5	91.0	97.8	105.3	112.8	120.3	135.3	5.20	13.60	4.61	5.76	7.71	5.09	6.37	8.62	5.73	7.19	9.77
1.0	1.0	1.0	1.1	1.1	1.1	1.1	1.1	1.1	1.1	1.1	1.2	1.2	1.2	1.2	*										
40.6	44.6	48.6	52.6	57.7	59.7	67.2	70.7	78.2	85.8	92.5	100.0	107.5	115.1	130.1	7.00	18.40	7.23	9.07	12.15	7.49	9.40	12.62	7.87	9.85	13.23
1.0	1.0	1.0	1.0	1.1	1.1	1.1	1.1	1.1	1.1	1.1	1.1	1.2	1.2	1.2											
44.0	48.0	52.0	56.0	61.1	63.1	70.6	74.1	81.6	89.1	95.9	103.4	110.9	118.4	133.4	5.80	15.40	5.50	6.88	9.24	5.90	7.40	10.00	6.46	8.10	10.98
1.0	1.0	1.0	1.1	1.1	1.1	1.1	1.1	1.1	1.1	1.1	1.1	1.2	1.2	1.2											
43.3	47.4	51.4	55.4	60.4	62.4	69.9	73.5	81.0	88.5	95.2	102.7	110.3	117.8	132.8	6.00	16.00	5.79	7.25	9.74	6.17	7.74	10.46	6.70	8.40	11.37
1.0	1.0	1.0	1.0	1.1	1.1	1.1	1.1	1.1	1.1	1.1	1.1	1.2	1.2	1.2											
47.4	51.4	55.4	59.4	64.4	66.4	73.9	77.5	85.0	92.5	99.2	106.7	114.2	121.7	136.7	4.60	12.40	3.71	4.61	6.13	4.26	5.32	7.18	4.99	6.26	8.52
1.0	1.0	1.0	1.1	1.1	1.1	1.1	1.1	1.1	1.1	1.1	1.2	1.2	1.2	1.2	*										
33.0	37.1	41.1	45.2	50.3	52.3	59.9	63.4	71.0	78.5	85.3	92.8	100.3	107.9	122.9	9.40	25.00	10.55	13.17	17.26	10.52	13.11	17.17	10.54	13.09	17.10
1.0	1.0	1.0	1.0	1.0	1.0	1.1	1.1	1.1	1.1	1.1	1.1	1.1	1.2	1.2											
46.1	50.1	54.1	58.1	63.1	65.1	72.7	76.2	83.7	91.2	97.9	105.5	113.0	120.5	135.5	5.00	13.60	4.32	5.38	7.19	4.81	6.03	8.15	5.49	6.89	9.36
1.0	1.0	1.0	1.1	1.1	1.1	1.1	1.1	1.1	1.1	1.1	1.2	1.2	1.2	1.2	*										
40.7	44.7	48.8	52.8	57.8	59.8	67.4	70.9	78.4	85.9	92.7	100.2	107.7	115.2	130.2	6.80	18.40	6.95	8.71	11.68	7.23	9.07	12.20	7.64	9.57	12.87
1.0	1.0	1.0	1.0	1.1	1.1	1.1	1.1	1.1	1.1	1.1	1.1	1.2	1.2	1.2											
38.9	42.9	47.0	51.0	56.0	58.0	65.6	69.1	76.6	84.1	90.9	98.4	105.9	113.5	128.5	7.40	20.00	7.80	9.78	13.07	8.01	10.04	13.44	8.33	10.42	13.94
1.0	1.0	1.0	1.1	1.1	1.1	1.1	1.1	1.1	1.1	1.1	1.1	1.2	1.2	1.2											
44.1	48.2	52.2	56.2	61.2	63.2	70.7	74.2	81.8	89.3	96.0	103.5	111.0	118.6	133.6	5.60	15.40	5.21	6.51	8.74	5.63	7.06	9.55	6.22	7.80	10.59
1.0	1.0	1.0	1.1	1.1	1.1	1.1	1.1	1.1	1.1	1.1	1.1	1.2	1.2	1.2											
43.5	47.5	51.5	55.5	60.6	62.6	70.1	73.6	81.1	88.6	95.4	102.9	110.4	117.9	132.9	5.80	16.00	5.50	6.89	9.25	5.90	7.41	10.01	6.46	8.11	10.98
1.0	1.0	1.0	1.0	1.1	1.1	1.1	1.1	1.1	1.1	1.1	1.1	1.2	1.2	1.2											
40.8	44.9	48.9	52.9	58.0	60.0	67.5	71.0	78.5	86.1	92.8	100.3	107.9	115.4	130.4	6.60	18.40	6.66	8.35	11.21	6.97	8.74	11.78	7.41	9.28	12.51
1.0	1.0	1.0	1.0	1.1	1.1	1.1	1.1	1.1	1.1	1.1	1.1	1.2	1.2	1.2											
46.2	50.3	54.3	58.3	63.3	65.3	72.8	76.3	83.8	91.3	98.1	105.6	113.1	120.6	135.6	4.80	13.60	4.02	5.00	6.67	4.54	5.68	7.67	5.24	6.58	8.95
1.0	1.0	1.0	1.1	1.1	1.1	1.1	1.1	1.1	1.1	1.1	1.2	1.2	1.2	1.2	*										
44.3	48.3	52.3	56.3	61.4	63.4	70.9	74.4	81.9	89.4	96.2	103.7	111.2	118.7	133.7	5.40	15.40	4.91	6.14	8.23	5.36	6.72	9.09	5.98	7.50	10.19
1.0	1.0	1.0	1.1	1.1	1.1	1.1	1.1	1.1	1.1	1.1	1.1	1.2	1.2	1.2											
43.6	47.7	51.7	55.7	60.7	62.7	70.2	73.8	81.3	88.8	95.5	103.1	110.6	118.1	133.1	5.60	16.00	5.21	6.51	8.75	5.63	7.07	9.55	6.22	7.81	10.59
1.0	1.0	1.0	1.0	1.1	1.1	1.1	1.1	1.1	1.1	1.1	1.1	1.2	1.2	1.2											
39.2	43.2	47.2	51.3	56.3	58.3	65.9	69.4	76.9	84.4	91.2	98.7	106.2	113.8	128.8	7.00	20.00	7.24	9.07	12.15	7.49	9.40	12.62	7.88	9.86	13.24
1.0	1.0	1.0	1.0	1.1	1.1	1.1	1.1	1.1	1.1	1.1	1.1	1.2	1.2	1.2											
41.0	45.0	49.1	53.1	58.1	60.1	67.7	71.2	78.7	86.2	93.0	100.5	108.0	115.5	130.5	6.40	18.40	6.38	7.99	10.73	6.71	8.42	11.34	7.18	8.99	12.14
1.0	1.0	1.0	1.0	1.1	1.1	1.1	1.1	1.1	1.1	1.1	1.1	1.2	1.2	1.2											
46.4	50.4	54.4	58.4	63.4	65.5	73.0	76.5	84.0	91.5	98.3	105.8	113.3	120.8	135.8	4.60	13.60	3.72	4.61	6.14	4.26	5.33	7.19	5.00	6.27	8.53
1.0	1.0	1.0	1.1	1.1	1.1	1.1	1.1	1.1	1.1	1.1	1.2	1.2	1.2	1.2	*										
33.5	37.6	41.7	45.8	50.8	52.9	60.5	64.0	71.5	79.1	85.9	93.4	100.9	108.5	123.5	8.60	25.00	9.47	11.85	15.67	9.54	11.92	15.77	9.67	12.05	15.92
1.0	1.0	1.0	1.0	1.0	1.0	1.1	1.1	1.1	1.1	1.1	1.1	1.1	1.2	1.2											
44.4	48.5	52.5	56.5	61.5	63.5	71.0	74.5	82.1	89.6	96.3	103.8	111.4	118.9	133.9	5.20	15.40	4.62	5.76	7.72	5.09	6.38	8.62	5.74	7.20	9.78
1.0	1.0	1.0	1.0	1.1	1.1	1.1	1.1	1.1	1.1	1.1	1.1	1.2	1.2	1.2	*										
43.8	47.8	51.8	55.8	60.9	62.9	70.4	73.9	81.4	88.9	95.7	103.2	110.7	118.2	133.2	5.40	16.00	4.91	6.14	8.24	5.36	6.72	9.09	5.98	7.50	10.19
1.0	1.0	1.0	1.0	1.1	1.1	1.1	1.1	1.1	1.1	1.1	1.1	1.2	1.2	1.2											
39.3	43.3	47.4	51.4	56.5	58.5	66.0	69.5	77.1	84.6	91.4	98.9	106.4	113.9	128.9	6.80	20.00	6.95	8.72	11.69	7.23	9.08	12.21	7.65	9.57	12.88
1.0	1.0	1.0	1.0	1.1	1.1	1.1	1.1	1.1	1.1	1.1	1.1	1.2	1.2	1.2											
41.1	45.2	49.2	53.2	58.3	60.3	67.8	71.3	78.8	86.4	93.1	100.6	108.2	115.7	130.7	6.20	18.40	6.09	7.63	10.24	6.44	8.08	10.91	6.94	8.70	11.76
1.0	1.0	1.0	1.0	1.1	1.1	1.1	1.1	1.1	1.1	1.1	1.1	1.2	1.2	1.2											
39.4	43.5	47.5	51.6	56.6	58.6	66.2	69.7	77.2	84.7	91.5	99.0	106.5	114.1	129.1	6.60	20.00	6.67	8.36	11.21	6.97	8.75	11.78	7.41	9.29	12.51
1.0	1.0	1.0	1.0	1.1	1.1	1.1	1.1	1.1	1.1	1.1	1.1	1.2	1.2	1.2											
44.6	48.6	52.6	56.6	61.7	63.7	71.2	74.7	82.2	89.7	96.5	104.0	111.5	119.0	134.0	5.00	15.40	4.32	5.38	7.20	4.82	6.03	8.15	5.49	6.89	9.37
1.0	1.0	1.0	1.0	1.1	1.1	1.1	1.1	1.1	1.1	1.1	1.1	1.2	1.2	1.2	*										
43.9	47.9	52.0	56.0	61.0	63.0	70.5	74.1	81.6	89.1	95.8	103.4	110.9	118.4	133.4	5.20	16.00	4.62	5.76	7.72	5.09	6.38	8.63	5.74	7.20	9.78
1.0	1.0	1.0	1.0	1.1	1.1	1.1	1.1	1.1	1.1	1.1	1.1	1.2	1.2	1.2	*										
41.3	45.3	49.3	53.4	58.4	60.4	68.0	71.5	79.0	86.5	93.3	100.8	108.3	115.8	130.8	6.00	18.40	5.80	7.26	9.75	6.17	7.75	10.46	6.71	8.41	11.38
1.0	1.0	1.0	1.0	1.1	1.1	1.1	1.1	1.1	1.1	1.1	1.1	1.2	1.2	1.2											

* Diameters below RMA minimum for other than Cog-Belt V-belts. Use with Super Blue Ribbon or Aramax V-belts will result in reduced life and loss of efficiency.

CLASSICAL SECTION PRE-ENGINEERED DRIVE SELECTION TABLES

B, BP, BK, BX PRE-ENGINEERED TABLES RATIO 3.01 - 3.79

Driven Speed for Motor Speed of			Sheave Datum Diameters		V-Belt Number and Center Distance (other sizes may be available, see page 216)																					
870 RPM	1160 RPM	1750 RPM	Small Sheave	Large Sheave	Speed Ratio	B 35	B 38	B 42	B 46	B 52	B 56	B 60	B 62	B 65	B 68	B 70	B 75	B 78	B 80	B 85	B 90	B 95	B 100	B 105	B 112
289	385	580	6.40	20.00	3.01	—	—	—	—	—	—	—	—	—	—	—	16.2	17.9	18.9	21.6	24.2	26.8	29.4	31.9	35.5
						—	—	—	—	—	—	—	—	—	—	—	0.8	0.9	0.9	0.9	0.9	0.9	0.9	1.0	1.0
287	382	576	8.00	25.00	3.04	—	—	—	—	—	—	—	—	—	—	—	—	—	—	—	—	20.7	23.4	26.1	29.8
						—	—	—	—	—	—	—	—	—	—	—	—	—	—	—	—	0.9	0.9	0.9	0.9
285	380	574	5.80	18.40	3.05	—	—	—	—	—	—	—	—	—	14.5	15.6	18.3	19.9	20.9	23.6	26.1	28.7	31.3	33.8	37.4
						—	—	—	—	—	—	—	—	—	0.8	0.8	0.9	0.9	0.9	0.9	0.9	0.9	1.0	1.0	1.0
285	380	573	5.00	16.00	3.06	—	—	—	—	—	—	13.3	14.4	16.0	17.5	18.6	21.2	22.7	23.8	26.3	28.9	31.4	34.0	36.5	40.0
			*			—	—	—	—	—	—	0.8	0.8	0.8	0.9	0.9	0.9	0.9	0.9	0.9	0.9	1.0	1.0	1.0	1.0
284	379	572	4.80	15.40	3.06	—	—	—	—	—	11.8	14.0	15.1	16.7	18.3	19.3	21.9	23.4	24.5	27.0	29.6	32.1	34.6	37.2	40.7
			*			—	—	—	—	—	0.8	0.8	0.8	0.8	0.9	0.9	0.9	0.9	0.9	0.9	0.9	1.0	1.0	1.0	1.0
280	373	563	6.20	20.00	3.11	—	—	—	—	—	—	—	—	—	—	—	16.4	18.0	19.1	21.7	24.3	26.9	29.5	32.1	35.7
						—	—	—	—	—	—	—	—	—	—	—	0.8	0.8	0.9	0.9	0.9	0.9	0.9	1.0	1.0
279	373	562	9.40	30.00	3.11	—	—	—	—	—	—	—	—	—	—	—	—	—	—	—	—	—	—	—	23.7
						—	—	—	—	—	—	—	—	—	—	—	—	—	—	—	—	—	—	—	0.9
276	368	555	5.60	18.40	3.15	—	—	—	—	—	—	—	—	—	14.7	15.8	18.4	20.0	21.1	23.7	26.3	28.8	31.4	33.9	37.5
						—	—	—	—	—	—	—	—	—	0.8	0.8	0.9	0.9	0.9	0.9	0.9	0.9	1.0	1.0	1.0
274	365	551	4.80	16.00	3.17	—	—	—	—	—	—	13.4	14.5	16.1	17.7	18.7	21.3	22.9	23.9	26.5	29.0	31.6	34.1	36.6	40.2
			*			—	—	—	—	—	—	0.8	0.8	0.8	0.9	0.9	0.9	0.9	0.9	0.9	0.9	1.0	1.0	1.0	1.0
273	365	550	4.60	15.40	3.18	—	—	—	—	—	12.0	14.2	15.2	16.8	18.4	19.4	22.0	23.6	24.6	27.2	29.7	32.2	34.8	37.3	40.8
			*			—	—	—	—	—	0.8	0.8	0.8	0.8	0.9	0.9	0.9	0.9	0.9	0.9	0.9	1.0	1.0	1.0	1.0
271	362	546	6.00	20.00	3.20	—	—	—	—	—	—	—	—	—	—	—	16.5	18.1	19.2	21.9	24.5	27.1	29.7	32.2	35.8
						—	—	—	—	—	—	—	—	—	—	—	0.8	0.8	0.9	0.9	0.9	0.9	0.9	1.0	1.0
267	356	537	5.40	18.40	3.26	—	—	—	—	—	—	—	—	—	14.8	15.9	18.6	20.2	21.2	23.8	26.4	29.0	31.5	34.1	37.6
						—	—	—	—	—	—	—	—	—	0.8	0.8	0.9	0.9	0.9	0.9	0.9	0.9	1.0	1.0	1.0
266	355	535	7.40	25.00	3.27	—	—	—	—	—	—	—	—	—	—	—	—	—	—	—	18.3	21.1	23.8	26.5	30.2
						—	—	—	—	—	—	—	—	—	—	—	—	—	—	—	0.8	0.9	0.9	0.9	0.9
263	351	530	4.60	16.00	3.30	—	—	—	—	—	—	13.5	14.6	16.2	17.8	18.9	21.5	23.0	24.0	26.6	29.2	31.7	34.2	36.8	40.3
			*			—	—	—	—	—	—	0.8	0.8	0.8	0.9	0.9	0.9	0.9	0.9	0.9	0.9	1.0	1.0	1.0	1.0
263	351	529	5.80	20.00	3.31	—	—	—	—	—	—	—	—	—	—	—	16.6	18.3	19.3	22.0	24.6	27.2	29.8	32.4	35.9
						—	—	—	—	—	—	—	—	—	—	—	0.8	0.8	0.9	0.9	0.9	0.9	0.9	1.0	1.0
258	343	518	5.20	18.40	3.38	—	—	—	—	—	—	—	—	—	14.9	16.0	18.7	20.3	21.3	24.0	26.5	29.1	31.7	34.2	37.8
			*			—	—	—	—	—	—	—	—	—	0.8	0.8	0.9	0.9	0.9	0.9	0.9	0.9	1.0	1.0	1.0
257	342	516	8.60	30.00	3.39	—	—	—	—	—	—	—	—	—	—	—	—	—	—	—	—	—	—	—	24.2
						—	—	—	—	—	—	—	—	—	—	—	—	—	—	—	—	—	—	—	0.9
254	339	512	5.60	20.00	3.42	—	—	—	—	—	—	—	—	—	—	—	16.7	18.4	19.5	22.1	24.7	27.3	29.9	32.5	36.1
						—	—	—	—	—	—	—	—	—	—	—	0.8	0.8	0.9	0.9	0.9	0.9	0.9	1.0	1.0
252	336	507	7.00	25.00	3.45	—	—	—	—	—	—	—	—	—	—	—	—	—	—	—	18.6	21.4	24.1	26.8	30.4
						—	—	—	—	—	—	—	—	—	—	—	—	—	—	—	0.8	0.9	0.9	0.9	0.9
248	331	499	5.00	18.40	3.50	—	—	—	—	—	—	—	—	13.3	15.0	16.1	18.8	20.4	21.5	24.1	26.7	29.3	31.8	34.4	37.9
			*			—	—	—	—	—	—	—	—	0.8	0.8	0.8	0.9	0.9	0.9	0.9	0.9	0.9	1.0	1.0	1.0
246	328	494	5.40	20.00	3.54	—	—	—	—	—	—	—	—	—	—	—	16.9	18.5	19.6	22.3	24.9	27.5	30.1	32.6	36.2
						—	—	—	—	—	—	—	—	—	—	—	0.8	0.8	0.9	0.9	0.9	0.9	0.9	1.0	1.0
245	327	494	6.80	25.00	3.55	—	—	—	—	—	—	—	—	—	—	—	—	—	—	—	18.7	21.5	24.2	26.9	30.6
						—	—	—	—	—	—	—	—	—	—	—	—	—	—	—	0.8	0.9	0.9	0.9	0.9
239	319	481	8.00	30.00	3.63	—	—	—	—	—	—	—	—	—	—	—	—	—	—	—	—	—	—	20.6	24.6
						—	—	—	—	—	—	—	—	—	—	—	—	—	—	—	—	—	—	0.8	0.9
239	319	481	4.80	18.40	3.64	—	—	—	—	—	—	—	—	13.5	15.2	16.3	19.0	20.6	21.6	24.2	26.8	29.4	32.0	34.5	38.1
			*			—	—	—	—	—	—	—	—	0.8	0.8	0.8	0.9	0.9	0.9	0.9	0.9	0.9	1.0	1.0	1.0
239	318	480	6.60	25.00	3.65	—	—	—	—	—	—	—	—	—	—	—	—	—	—	—	18.8	21.6	24.3	27.0	30.7
						—	—	—	—	—	—	—	—	—	—	—	—	—	—	—	0.8	0.9	0.9	0.9	0.9
237	316	477	5.20	20.00	3.67	—	—	—	—	—	—	—	—	—	—	14.2	17.0	18.6	19.7	22.4	25.0	27.6	30.2	32.8	36.4
			*			—	—	—	—	—	—	—	—	—	—	0.8	0.8	0.8	0.9	0.9	0.9	0.9	0.9	1.0	1.0
232	309	466	6.40	25.00	3.76	—	—	—	—	—	—	—	—	—	—	—	—	—	—	—	19.0	21.8	24.5	27.1	30.8
						—	—	—	—	—	—	—	—	—	—	—	—	—	—	—	0.8	0.9	0.9	0.9	0.9
230	306	462	4.60	18.40	3.79	—	—	—	—	—	—	—	—	13.6	15.3	16.4	19.1	20.7	21.7	24.4	27.0	29.5	32.1	34.6	38.2
			*			—	—	—	—	—	—	—	—	0.8	0.8	0.8	0.9	0.9	0.9	0.9	0.9	0.9	1.0	1.0	1.0

* Diameters below RMA minimum for other than Cog-Belt V-belts. Use with Super Blue Ribbon or Aramax V-belts will result in reduced life and loss of efficiency.

CLASSICAL SECTION PRE-ENGINEERED DRIVE SELECTION TABLES

B, BP, BK, BX PRE-ENGINEERED TABLES — RATIO 3.01 - 3.79

V-Belt Number and Center Distance (Other sizes may be available, see page 216)															Sheave Datum Diameters		Rated HP per Belt (Includes Added HP for Speed Ratio)								
																	Super Blue Ribbon & Aramax BP & BK RPM of Small Sheave			Super II (B) RPM of Small Sheave			Gold Label Cog-Belt (BX) RPM of Small Sheave		
B 120	B 128	B 136	B 144	B 154	B 158	B 173	B 180	B 195	B 210	B 225	B 240	B 255	B 270	B 300	Small Sheave	Large Sheave	870 RPM	1160 RPM	1750 RPM	870 RPM	1160 RPM	1750 RPM	870 RPM	1160 RPM	1750 RPM
39.6	43.6	47.7	51.7	56.8	58.8	66.3	69.8	77.4	84.9	91.7	99.2	106.7	114.2	129.2	6.40	20.00	6.38	7.99	10.73	6.71	8.42	11.35	7.18	9.00	12.14
1.0	1.0	1.0	1.0	1.1	1.1	1.1	1.1	1.1	1.1	1.1	1.1	1.2	1.2	1.2											
33.9	38.0	42.1	46.2	51.3	53.3	60.9	64.4	72.0	79.5	86.3	93.8	101.4	108.9	123.9	8.00	25.00	8.65	10.83	14.41	8.78	11.00	14.64	9.01	11.25	14.96
1.0	1.0	1.0	1.0	1.0	1.0	1.1	1.1	1.1	1.1	1.1	1.1	1.1	1.2	1.2											
41.4	45.5	49.5	53.5	58.6	60.6	68.1	71.6	79.1	86.7	93.4	100.9	108.5	116.0	131.0	5.80	18.40	5.51	6.89	9.26	5.91	7.41	10.01	6.47	8.11	10.99
1.0	1.0	1.0	1.0	1.1	1.1	1.1	1.1	1.1	1.1	1.1	1.1	1.2	1.2	1.2											
44.1	48.1	52.1	56.1	61.2	63.2	70.7	74.2	81.7	89.2	96.0	103.5	111.0	118.5	133.5	5.00	16.00	4.32	5.39	7.20	4.82	6.03	8.15	5.49	6.89	9.37
1.0	1.0	1.0	1.0	1.1	1.1	1.1	1.1	1.1	1.1	1.1	1.1	1.2	1.2	1.2	*										
44.7	48.7	52.8	56.8	61.8	63.8	71.3	74.8	82.4	89.9	96.6	104.2	111.7	119.2	134.2	4.80	15.40	4.02	5.00	6.67	4.54	5.68	7.68	5.25	6.58	8.96
1.0	1.0	1.0	1.0	1.1	1.1	1.1	1.1	1.1	1.1	1.1	1.1	1.2	1.2	1.2	*										
39.7	43.8	47.8	51.9	56.9	58.9	66.5	70.0	77.5	85.0	91.8	99.3	106.8	114.4	129.4	6.20	20.00	6.09	7.63	10.25	6.44	8.09	10.91	6.94	8.70	11.77
1.0	1.0	1.0	1.0	1.1	1.1	1.1	1.1	1.1	1.1	1.1	1.1	1.2	1.2	1.2											
28.1	32.3	36.5	40.7	45.8	47.8	55.5	59.1	66.7	74.2	81.1	88.6	96.2	103.7	118.8	9.40	30.00	10.56	13.18	17.27	10.52	13.12	17.18	10.54	13.09	17.11
0.9	1.0	1.0	1.0	1.0	1.0	1.0	1.1	1.1	1.1	1.1	1.1	1.1	1.2	1.2											
41.6	45.6	49.6	53.7	58.7	60.7	68.3	71.8	79.3	86.8	93.6	101.1	108.6	116.1	131.1	5.60	18.40	5.21	6.52	8.75	5.64	7.07	9.56	6.23	7.81	10.60
1.0	1.0	1.0	1.0	1.1	1.1	1.1	1.1	1.1	1.1	1.1	1.1	1.2	1.2	1.2											
44.2	48.2	52.3	56.3	61.3	63.3	70.8	74.4	81.9	89.4	96.2	103.7	111.2	118.7	133.7	4.80	16.00	4.02	5.00	6.68	4.54	5.68	7.68	5.25	6.58	8.96
1.0	1.0	1.0	1.0	1.1	1.1	1.1	1.1	1.1	1.1	1.1	1.1	1.2	1.2	1.2	*										
44.9	48.9	52.9	56.9	62.0	64.0	71.5	75.0	82.5	90.0	96.8	104.3	111.8	119.3	134.3	4.60	15.40	3.72	4.62	6.14	4.26	5.33	7.19	5.00	6.27	8.53
1.0	1.0	1.0	1.0	1.1	1.1	1.1	1.1	1.1	1.1	1.1	1.1	1.2	1.2	1.2	*										
39.9	43.9	48.0	52.0	57.1	59.1	66.6	70.1	77.7	85.2	92.0	99.5	107.0	114.5	129.5	6.00	20.00	5.80	7.26	9.76	6.18	7.75	10.47	6.71	8.41	11.38
1.0	1.0	1.0	1.0	1.1	1.1	1.1	1.1	1.1	1.1	1.1	1.1	1.2	1.2	1.2											
41.7	45.7	49.8	53.8	58.8	60.9	68.4	71.9	79.4	87.0	93.7	101.2	108.8	116.3	131.3	5.40	18.40	4.92	6.14	8.24	5.37	6.73	9.10	5.99	7.51	10.20
1.0	1.0	1.0	1.0	1.1	1.1	1.1	1.1	1.1	1.1	1.1	1.1	1.2	1.2	1.2											
34.3	38.4	42.5	46.6	51.7	53.7	61.3	64.9	72.4	80.0	86.8	94.3	101.8	109.3	124.4	7.40	25.00	7.81	9.79	13.08	8.02	10.05	13.46	8.34	10.43	13.95
1.0	1.0	1.0	1.0	1.0	1.0	1.1	1.1	1.1	1.1	1.1	1.1	1.1	1.2	1.2											
44.4	48.4	52.4	56.4	61.5	63.5	71.0	74.5	82.0	89.5	96.3	103.8	111.3	118.8	133.8	4.60	16.00	3.72	4.62	6.14	4.26	5.33	7.19	5.00	6.27	8.54
1.0	1.0	1.0	1.0	1.1	1.1	1.1	1.1	1.1	1.1	1.1	1.1	1.2	1.2	1.2	*										
40.0	44.1	48.1	52.2	57.2	59.2	66.8	70.3	77.8	85.3	92.1	99.6	107.2	114.7	129.7	5.80	20.00	5.51	6.89	9.26	5.91	7.41	10.02	6.47	8.11	10.99
1.0	1.0	1.0	1.0	1.1	1.1	1.1	1.1	1.1	1.1	1.1	1.1	1.2	1.2	1.2											
41.8	45.9	49.9	54.0	59.0	61.0	68.5	72.1	79.6	87.1	93.9	101.4	108.9	116.4	131.4	5.20	18.40	4.62	5.77	7.73	5.09	6.38	8.63	5.74	7.20	9.79
1.0	1.0	1.0	1.0	1.1	1.1	1.1	1.1	1.1	1.1	1.1	1.1	1.2	1.2	1.2	*										
28.6	32.8	37.0	41.2	46.3	48.4	56.1	59.6	67.2	74.8	81.6	89.2	96.7	104.3	119.4	8.60	30.00	9.47	11.85	15.68	9.54	11.93	15.77	9.68	12.06	15.93
0.9	0.9	1.0	1.0	1.0	1.0	1.0	1.1	1.1	1.1	1.1	1.1	1.1	1.2	1.2											
40.1	44.2	48.3	52.3	57.3	59.4	66.9	70.4	78.0	85.5	92.3	99.8	107.3	114.8	129.8	5.60	20.00	5.21	6.52	8.76	5.64	7.07	9.56	6.23	7.81	10.60
1.0	1.0	1.0	1.0	1.1	1.1	1.1	1.1	1.1	1.1	1.1	1.1	1.2	1.2	1.2											
34.6	38.7	42.8	46.9	52.0	54.0	61.6	65.1	72.7	80.3	87.1	94.6	102.1	109.6	124.7	70.0	25.00	7.24	9.08	12.16	7.50	9.41	12.63	7.88	9.86	13.25
1.0	1.0	1.0	1.0	1.0	1.0	1.1	1.1	1.1	1.1	1.1	1.1	1.1	1.2	1.2											
42.0	46.0	50.1	54.1	59.1	61.2	68.7	72.2	79.7	87.3	94.0	101.6	109.1	116.6	131.6	5.00	18.40	4.32	5.39	7.21	4.82	6.04	8.16	5.50	6.90	9.38
1.0	1.0	1.0	1.0	1.1	1.1	1.1	1.1	1.1	1.1	1.1	1.1	1.2	1.2	1.2	*										
40.3	44.4	48.4	58.4	57.5	59.5	67.1	70.6	78.1	85.6	92.4	99.9	107.5	115.0	130.	5.40	20.00	4.92	6.15	8.25	5.37	6.73	9.10	5.99	7.51	10.20
1.0	1.0	1.0	1.0	1.0	1.1	1.1	1.1	1.1	1.1	1.1	1.1	1.2	1.2	1.2											
34.7	38.9	43.0	47.0	52.1	54.2	61.8	65.3	72.9	80.4	87.2	94.7	102.3	109.8	124.8	6.80	25.00	6.96	8.72	11.70	7.24	9.08	12.21	7.65	9.58	12.89
1.0	1.0	1.0	1.0	1.0	1.0	1.1	1.1	1.1	1.1	1.1	1.1	1.1	1.2	1.2											
29.0	33.2	37.4	41.6	46.8	48.8	56.5	60.0	67.7	75.3	82.1	89.6	97.2	104.7	119.8	8.00	30.00	8.65	10.83	14.41	8.79	11.00	14.65	9.02	11.25	14.97
0.9	0.9	1.0	1.0	1.1	1.1	1.1	1.1	1.1	1.1	1.1	1.1	1.1	1.2	1.2											
42.1	46.2	50.2	54.3	59.3	61.3	68.8	72.4	79.9	87.4	94.2	101.7	109.2	116.7	131.8	4.80	18.40	4.02	5.01	6.68	4.54	5.69	7.68	5.25	6.59	8.96
1.0	1.0	1.0	1.0	1.1	1.1	1.1	1.1	1.1	1.1	1.1	1.1	1.2	1.2	1.2	*										
34.9	39.0	43.1	47.2	52.3	54.3	61.9	65.4	73.0	80.6	87.3	94.9	102.4	109.9	125.0	6.60	25.00	6.67	8.36	11.22	6.98	8.75	11.79	7.42	9.29	12.52
1.0	1.0	1.0	1.0	1.0	1.0	1.1	1.1	1.1	1.1	1.1	1.1	1.1	1.2	1.2											
40.4	44.5	48.5	52.6	57.6	59.6	67.2	70.7	78.3	85.8	92.6	100.1	107.6	115.1	130.1	5.20	20.00	4.62	5.77	7.73	5.09	6.39	8.63	5.74	7.21	9.79
1.0	1.0	1.0	1.0	1.0	1.1	1.1	1.1	1.1	1.1	1.1	1.1	1.2	1.2	1.2	*										
35.0	39.1	43.2	47.3	52.4	54.4	62.0	65.6	73.1	80.7	87.5	95.0	102.6	110.1	125.1	6.40	25.00	6.38	8.00	10.74	6.71	8.42	11.36	7.18	9.00	12.15
1.0	1.0	1.0	1.0	1.0	1.0	1.1	1.1	1.1	1.1	1.1	1.1	1.1	1.2	1.2											
42.3	46.3	50.4	54.4	59.4	61.4	69.0	72.5	80.0	87.6	94.3	101.9	109.4	116.9	131.9	4.60	18.40	3.72	4.62	6.15	4.26	5.33	7.20	5.00	6.27	8.54
1.0	1.0	1.0	1.0	1.1	1.1	1.1	1.1	1.1	1.1	1.1	1.1	1.2	1.2	1.2	*										

* Diameters below RMA minimum for other than Cog-Belt V-belts. Use with Super Blue Ribbon or Aramax V-belts will result in reduced life and loss of efficiency.

CLASSICAL SECTION PRE-ENGINEERED DRIVE SELECTION TABLES

B, BP, BK, BX PRE-ENGINEERED TABLES RATIO 3.80 - 5.28

Driven Speed for Motor Speed of			Sheave Datum Diameters		V-Belt Number and Center Distance (other sizes may be available, see page 216)																					
870 RPM	1160 RPM	1750 RPM	Small Sheave	Large Sheave	Speed Ratio	B 35	B 38	B 42	B 46	B 52	B 56	B 60	B 62	B 65	B 68	B 70	B 75	B 78	B 80	B 85	B 90	B 95	B 100	B 105	B 112
229	305	460	5.00	20.00	3.80	—	—	—	—	—	—	—	—	—	—	14.3	17.1	18.8	19.8	22.5	25.1	27.8	30.3	32.9	36.5
			*			—	—	—	—	—	—	—	—	—	—	0.8	0.8	0.8	0.9	0.9	0.9	0.9	0.9	1.0	1.0
225	300	452	6.20	25.00	3.87	—	—	—	—	—	—	—	—	—	—	—	—	—	—	—	19.1	21.1	24.6	27.3	31.0
						—	—	—	—	—	—	—	—	—	—	—	—	—	—	—	0.8	0.9	0.9	0.9	0.9
222	296	447	7.40	30.00	3.92	—	—	—	—	—	—	—	—	—	—	—	—	—	—	—	—	—	—	21.0	25.0
						—	—	—	—	—	—	—	—	—	—	—	—	—	—	—	—	—	—	0.8	0.9
221	295	445	9.40	38.00	3.93	—	—	—	—	—	—	—	—	—	—	—	—	—	—	—	—	—	—	—	—
						—	—	—	—	—	—	—	—	—	—	—	—	—	—	—	—	—	—	—	—
220	294	443	4.80	20.00	3.95	—	—	—	—	—	—	—	—	—	—	14.4	17.2	18.9	20.0	22.6	25.3	27.9	30.5	33.0	36.6
			*			—	—	—	—	—	—	—	—	—	—	0.8	0.8	0.8	0.9	0.9	0.9	0.9	0.9	1.0	1.0
218	291	438	6.00	25.00	3.99	—	—	—	—	—	—	—	—	—	—	—	—	—	—	—	19.2	22.0	24.7	27.4	31.1
						—	—	—	—	—	—	—	—	—	—	—	—	—	—	—	0.8	0.9	0.9	0.9	0.9
212	282	426	4.60	20.00	4.11	—	—	—	—	—	—	—	—	—	—	14.5	17.4	19.0	20.1	22.8	25.4	28.0	30.6	33.2	36.8
			*			—	—	—	—	—	—	—	—	—	—	0.8	0.8	0.8	0.9	0.9	0.9	0.9	0.9	1.0	1.0
211	281	425	5.80	25.00	4.12	—	—	—	—	—	—	—	—	—	—	—	—	—	—	—	19.3	22.1	24.9	27.5	31.2
						—	—	—	—	—	—	—	—	—	—	—	—	—	—	—	0.8	0.9	0.9	0.9	0.9
211	281	424	7.00	30.00	4.13	—	—	—	—	—	—	—	—	—	—	—	—	—	—	—	—	—	—	21.2	25.2
						—	—	—	—	—	—	—	—	—	—	—	—	—	—	—	—	—	—	0.8	0.9
205	273	412	6.80	30.00	4.24	—	—	—	—	—	—	—	—	—	—	—	—	—	—	—	—	—	—	21.3	25.3
						—	—	—	—	—	—	—	—	—	—	—	—	—	—	—	—	—	—	0.8	0.9
204	272	411	5.60	25.00	4.26	—	—	—	—	—	—	—	—	—	—	—	—	—	—	—	19.4	22.3	25.0	27.7	31.4
						—	—	—	—	—	—	—	—	—	—	—	—	—	—	—	0.8	0.9	0.9	0.9	0.9
203	271	408	8.60	38.00	4.28	—	—	—	—	—	—	—	—	—	—	—	—	—	—	—	—	—	—	—	—
						—	—	—	—	—	—	—	—	—	—	—	—	—	—	—	—	—	—	—	—
199	266	401	6.60	30.00	4.37	—	—	—	—	—	—	—	—	—	—	—	—	—	—	—	—	—	—	21.5	25.5
						—	—	—	—	—	—	—	—	—	—	—	—	—	—	—	—	—	—	0.8	0.9
197	263	397	5.40	25.00	4.41	—	—	—	—	—	—	—	—	—	—	—	—	—	—	—	19.6	22.4	25.1	27.8	31.5
						—	—	—	—	—	—	—	—	—	—	—	—	—	—	—	0.8	0.9	0.9	0.9	0.9
193	258	389	6.40	30.00	4.50	—	—	—	—	—	—	—	—	—	—	—	—	—	—	—	—	—	—	21.6	25.6
						—	—	—	—	—	—	—	—	—	—	—	—	—	—	—	—	—	—	0.8	0.9
190	254	383	5.20	25.00	4.57	—	—	—	—	—	—	—	—	—	—	—	—	—	—	16.8	19.7	22.5	25.2	27.9	31.6
			*			—	—	—	—	—	—	—	—	—	—	—	—	—	—	0.8	0.8	0.9	0.9	0.9	0.9
189	253	381	8.00	38.00	4.59	—	—	—	—	—	—	—	—	—	—	—	—	—	—	—	—	—	—	—	—
						—	—	—	—	—	—	—	—	—	—	—	—	—	—	—	—	—	—	—	—
188	250	378	6.20	30.00	4.63	—	—	—	—	—	—	—	—	—	—	—	—	—	—	—	—	—	—	21.7	25.7
						—	—	—	—	—	—	—	—	—	—	—	—	—	—	—	—	—	—	0.8	0.9
184	245	369	5.00	25.00	4.74	—	—	—	—	—	—	—	—	—	—	—	—	—	—	16.9	19.8	22.6	25.4	28.1	31.8
			*			—	—	—	—	—	—	—	—	—	—	—	—	—	—	0.8	0.8	0.9	0.9	0.9	0.9
182	243	366	6.00	30.00	4.78	—	—	—	—	—	—	—	—	—	—	—	—	—	—	—	—	—	—	21.8	25.8
						—	—	—	—	—	—	—	—	—	—	—	—	—	—	—	—	—	—	0.8	0.9
177	236	356	4.80	25.00	4.92	—	—	—	—	—	—	—	—	—	—	—	—	—	—	17.0	19.9	22.8	25.5	28.2	31.9
			*			—	—	—	—	—	—	—	—	—	—	—	—	—	—	0.8	0.8	0.9	0.9	0.9	0.9
176	235	355	5.80	30.00	4.93	—	—	—	—	—	—	—	—	—	—	—	—	—	—	—	—	—	—	21.9	26.0
						—	—	—	—	—	—	—	—	—	—	—	—	—	—	—	—	—	—	0.8	0.9
176	234	354	7.40	38.00	4.95	—	—	—	—	—	—	—	—	—	—	—	—	—	—	—	—	—	—	—	—
						—	—	—	—	—	—	—	—	—	—	—	—	—	—	—	—	—	—	—	—
171	277	343	5.60	30.00	5.10	—	—	—	—	—	—	—	—	—	—	—	—	—	—	—	—	—	—	22.1	26.1
						—	—	—	—	—	—	—	—	—	—	—	—	—	—	—	—	—	—	0.8	0.9
170	277	342	4.60	25.00	5.12	—	—	—	—	—	—	—	—	—	—	—	—	—	—	17.1	20.1	22.9	25.6	28.3	32.0
			*			—	—	—	—	—	—	—	—	—	—	—	—	—	—	0.8	0.8	0.9	0.9	0.9	0.9
167	222	335	7.00	38.00	5.22	—	—	—	—	—	—	—	—	—	—	—	—	—	—	—	—	—	—	—	—
						—	—	—	—	—	—	—	—	—	—	—	—	—	—	—	—	—	—	—	—
165	220	332	5.40	30.00	5.28	—	—	—	—	—	—	—	—	—	—	—	—	—	—	—	—	—	—	22.2	26.2
						—	—	—	—	—	—	—	—	—	—	—	—	—	—	—	—	—	—	0.8	0.9

* Diameters below RMA minimum for other than Cog-Belt V-belts. Use with Super Blue Ribbon or Aramax V-belts will result in reduced life and loss of efficiency.

CLASSICAL SECTION PRE-ENGINEERED DRIVE SELECTION TABLES

B, BP, BK, BX PRE-ENGINEERED TABLES — RATIO 3.80 - 5.28

V-Belt Number and Center Distance (Other sizes may be available, see page 216)															Sheave Datum Diameters		Rated HP per Belt (Includes Added HP for Speed Ratio)								
																	Super Blue Ribbon & Aramax BP & BK RPM of Small Sheave			Super II (B) RPM of Small Sheave			Gold Label Cog-Belt (BX) RPM of Small Sheave		
B 120	B 128	B 136	B 144	B 154	B 158	B 173	B 180	B 195	B 210	B 225	B 240	B 255	B 270	B 300	Small Sheave	Large Sheave	870 RPM	1160 RPM	1750 RPM	870 RPM	1160 RPM	1750 RPM	870 RPM	1160 RPM	1750 RPM
40.6	44.6	48.7	52.7	57.8	59.8	67.3	70.9	78.4	85.9	92.7	100.2	107.8	115.3	130.3	5.00	20.00	4.32	5.39	7.21	4.82	6.04	8.16	5.50	6.90	9.38
1.0	1.0	1.0	1.0	1.0	1.1	1.1	1.1	1.1	1.1	1.1	1.1	1.2	1.2	1.2	*										
35.1	39.3	43.4	47.5	52.6	54.6	62.2	65.7	73.3	80.8	87.6	95.2	102.7	110.2	125.3	6.20	25.00	6.09	7.63	10.26	6.45	8.09	10.92	6.95	8.71	11.77
1.0	1.0	1.0	1.0	1.0	1.0	1.1	1.1	1.1	1.1	1.1	1.1	1.1	1.2	1.2											
29.4	33.6	37.8	42.0	47.2	49.2	56.9	60.5	68.1	75.7	82.5	90.1	97.6	105.2	120.2	7.40	30.00	7.81	9.79	13.08	8.02	10.05	13.46	8.34	10.43	13.96
0.9	0.9	1.0	1.0	1.0	1.1	1.1	1.1	1.1	1.1	1.1	1.1	1.1	1.1	1.2											
—	—	28.0	32.5	38.0	40.1	48.0	51.7	59.5	67.1	74.0	81.7	89.3	96.9	112.0	9.40	38.00	10.56	13.18	17.28	10.53	13.13	17.19	10.55	13.10	17.12
—	—	0.9	0.9	1.0	1.1	1.1	1.1	1.1	1.1	1.1	1.1	1.1	1.1	1.2											
40.7	44.8	48.8	52.9	57.9	59.9	67.5	71.0	78.6	86.1	92.9	100.4	107.9	115.4	130.5	4.80	20.00	4.02	5.01	6.68	4.54	5.69	7.68	5.25	6.59	8.96
1.0	1.0	1.0	1.0	1.0	1.1	1.1	1.1	1.1	1.1	1.1	1.1	1.2	1.2	1.2	*										
35.3	39.4	43.5	47.6	52.7	54.7	62.3	65.9	73.4	81.0	87.8	95.3	102.9	110.4	125.4	6.00	25.00	5.80	7.27	9.76	6.18	7.76	10.47	6.71	8.41	11.39
1.0	1.0	1.0	1.0	1.0	1.0	1.1	1.1	1.1	1.1	1.1	1.1	1.1	1.2	1.2											
40.9	44.9	49.0	53.0	58.1	60.1	67.6	71.2	78.7	86.2	93.0	100.5	108.1	115.6	130.6	4.60	20.00	3.72	4.62	6.15	4.27	5.33	7.20	5.00	6.27	8.54
1.0	1.0	1.0	1.0	1.0	1.1	1.1	1.1	1.1	1.1	1.1	1.1	1.2	1.2	1.2	*										
35.4	39.5	43.7	47.7	52.8	54.9	62.5	66.0	73.6	81.1	87.9	95.5	103.0	110.5	125.6	5.80	25.00	5.51	6.90	9.26	5.91	7.42	10.02	6.47	8.12	11.00
1.0	1.0	1.0	1.0	1.0	1.0	1.1	1.1	1.1	1.1	1.1	1.1	1.1	1.2	1.2											
29.6	33.9	38.1	42.3	47.4	49.5	57.2	60.8	68.4	76.0	82.8	90.4	97.9	105.5	120.5	7.00	30.00	7.24	9.08	12.17	7.50	9.41	12.64	7.88	9.87	13.25
0.9	0.9	1.0	1.0	1.0	1.0	1.0	1.1	1.1	1.1	1.1	1.1	1.1	1.1	1.2											
	34.0	38.2	42.4	47.6	49.6	57.3	60.9	68.5	76.1	82.9	90.5	98.1	105.6	120.7	6.80	30.00	6.96	8.73	11.70	7.24	9.08	12.22	7.65	9.58	12.89
0.9	1.0	1.0	1.0	1.0	1.0	1.0	1.1	1.1	1.1	1.1	1.1	1.1	1.1	1.2											
35.5	39.7	43.8	47.9	53.0	55.0	62.6	66.2	73.7	81.3	88.1	95.6	103.2	110.7	125.7	5.60	25.00	5.22	6.53	8.76	5.64	7.08	9.57	6.23	7.82	10.60
1.0	1.0	1.0	1.0	1.0	1.0	1.1	1.1	1.1	1.1	1.1	1.1	1.1	1.2	1.2											
—	—	28.5	33.0	38.5	40.6	48.6	52.2	60.0	67.7	74.6	82.2	89.8	97.4	112.6	8.60	38.00	9.48	11.86	15.68	9.54	11.93	15.78	9.68	12.06	15.93
—	—	0.9	0.9	1.0	1.0	1.0	1.0	1.1	1.1	1.1	1.1	1.1	1.1	1.2											
29.9	34.2	38.4	42.5	47.7	49.8	57.5	61.0	68.7	76.3	83.1	90.6	98.2	105.8	120.8	6.60	30.00	6.67	8.36	11.23	6.98	8.76	11.79	7.42	9.29	12.53
0.9	0.9	1.0	1.0	1.0	1.0	1.0	1.1	1.1	1.1	1.1	1.1	1.1	1.1	1.2											
35.7	39.8	43.9	48.0	53.1	55.2	62.8	66.3	73.9	81.4	88.2	95.8	103.3	110.8	125.9	5.40	25.00	4.92	6.15	8.25	5.37	6.73	9.11	5.99	7.51	10.20
1.0	1.0	1.0	1.0	1.0	1.0	1.1	1.1	1.1	1.1	1.1	1.1	1.1	1.2	1.2											
30.0	34.3	38.5	42.7	47.9	49.9	57.6	61.2	68.8	76.4	83.2	90.8	98.4	105.9	121.0	6.40	30.00	6.38	8.00	10.75	6.71	8.43	11.36	7.19	9.00	12.15
0.9	0.9	1.0	1.0	1.0	1.0	1.0	1.1	1.1	1.1	1.1	1.1	1.1	1.1	1.2											
35.8	40.0	44.1	48.2	53.3	55.3	62.9	66.4	74.0	81.6	88.4	95.9	103.5	110.0	126.0	5.20	25.00	4.62	5.77	7.74	5.10	6.39	8.64	5.75	7.21	9.80
1.0	1.0	1.0	1.0	1.0	1.0	1.1	1.1	1.1	1.1	1.1	1.1	1.1	1.2	1.2	*										
—	—	28.9	33.4	38.9	41.0	49.0	52.6	60.4	68.1	75.0	82.7	90.3	97.91	113.0	8.00	38.00	8.65	10.84	14.42	8.79	11.00	14.65	9.02	11.26	14.97
—	—	0.9	0.9	1.0	1.0	1.0	1.0	1.0	1.1	1.1	1.1	1.1	1.1	1.2											
30.1	34.4	38.6	42.8	48.0	50.1	57.7	61.3	68.9	76.5	83.4	90.9	98.5	106.1	121.1	6.20	30.00	6.10	7.64	10.26	6.45	8.09	10.92	6.95	8.71	11.78
0.9	0.9	1.0	1.0	1.0	1.0	1.0	1.1	1.1	1.1	1.1	1.1	1.1	1.1	1.2											
35.9	40.1	44.2	48.3	53.4	55.4	63.0	66.6	74.2	81.7	88.5	96.1	103.6	111.1	126.2	5.00	25.00	4.33	5.39	7.21	4.82	6.04	8.17	5.50	6.90	9.39
1.0	1.0	1.0	1.0	1.0	1.0	1.1	1.1	1.1	1.1	1.1	1.1	1.2	1.2	1.2	*										
30.2	34.5	38.8	42.9	48.1	50.2	57.9	61.5	69.1	76.7	83.5	91.1	98.6	106.2	121.3	6.00	30.00	5.80	7.27	9.77	6.18	7.76	10.48	6.71	8.42	11.39
0.9	0.9	1.0	1.0	1.0	1.0	1.0	1.1	1.1	1.1	1.1	1.1	1.1	1.1	1.2											
36.1	40.2	44.3	48.4	53.5	55.6	63.2	66.7	74.3	81.9	88.7	96.2	103.8	111.3	126.3	4.80	25.00	4.03	5.01	6.69	4.55	5.69	7.69	5.25	6.59	8.97
1.0	1.0	1.0	1.0	1.0	1.0	1.1	1.1	1.1	1.1	1.1	1.1	1.1	1.2	1.2	*										
30.4	34.7	38.9	43.1	48.3	50.3	58.0	61.6	69.2	76.8	83.7	91.2	98.8	106.3	121.4	5.80	30.00	5.51	6.90	9.27	5.91	7.42	10.03	6.47	8.12	11.00
0.9	0.9	1.0	1.0	1.0	1.0	1.0	1.1	1.1	1.1	1.1	1.1	1.1	1.1	1.2											
—	24.5	29.2	33.8	39.3	41.4	49.4	53.0	60.8	68.5	75.4	83.1	90.7	98.3	113.5	7.40	38.00	7.81	9.79	13.09	8.02	10.06	13.47	8.34	10.43	13.96
0.8	0.9	0.9	0.9	1.0	1.0	1.0	1.0	1.0	1.1	1.1	1.1	1.1	1.1	1.2											
30.5	34.8	39.0	43.2	48.4	50.5	58.2	61.7	69.4	77.0	83.8	91.4	98.9	106.5	121.6	5.60	30.00	5.22	6.53	8.76	5.64	7.08	9.57	6.23	7.82	10.61
0.9	0.9	1.0	1.0	1.0	1.0	1.0	1.1	1.1	1.1	1.1	1.1	1.1	1.1	1.2											
36.2	40.4	44.5	48.6	53.7	55.7	68.3	66.9	74.5	82.0	88.8	96.4	103.9	111.4	126.5	4.60	25.00	3.72	4.63	6.15	4.27	5.34	7.20	5.00	6.28	8.55
1.0	1.0	1.0	1.0	1.0	1.0	1.1	1.1	1.1	1.1	1.1	1.1	1.1	1.2	1.2											
—	24.7	29.5	34.0	39.5	41.7	49.6	53.3	61.1	68.8	75.7	83.4	91.0	98.6	113.8	7.00	38.00	7.25	9.09	12.17	7.50	9.41	12.64	7.88	9.87	13.26
—	0.8	0.9	0.9	0.9	1.0	1.0	1.0	1.0	1.1	1.1	1.1	1.1	1.1	1.2											
30.6	34.9	39.2	43.4	48.5	50.6	58.3	61.9	69.5	77.1	83.9	91.5	99.1	106.6	121.7	5.40	30.00	4.92	6.15	8.25	5.37	6.74	9.11	5.99	7.52	10.21
0.9	0.9	1.0	1.0	1.0	1.0	1.0	1.1	1.1	1.1	1.1	1.1	1.1	1.1	1.2											

* Diameters below RMA minimum for other than Cog-Belt V-belts. Use with Super Blue Ribbon or Aramax V-belts will result in reduced life and loss of efficiency.

CLASSICAL SECTION PRE-ENGINEERED DRIVE SELECTION TABLES

B, BP, BK, BX PRE-ENGINEERED TABLES RATIO 5.36 - 7.75

Driven Speed for Motor Speed of			Sheave Datum Diameters		V-Belt Number and Center Distance (other sizes may be available, see page 216)																				
870 RPM	1160 RPM	1750 RPM	Small Sheave	Large Sheave	Speed Ratio	B 35	B 38	B 42	B 46	B 52	B 56	B 60	B 62	B 65	B 68	B 70	B 75	B 78	B 80	B 85	B 90	B 95	B 100	B 105	B 112
162	216	326	6.80	38.00	5.36	—	—	—	—	—	—	—	—	—	—	—	—	—	—	—	—	—	—	—	—
						—	—	—	—	—	—	—	—	—	—	—	—	—	—	—	—	—	—	—	—
159	212	320	5.20	30.00	5.47	—	—	—	—	—	—	—	—	—	—	—	—	—	—	—	—	—	19.3	22.3	26.3
			*			—	—	—	—	—	—	—	—	—	—	—	—	—	—	—	—	—	0.7	0.8	0.9
158	210	317	6.60	38.00	5.52	—	—	—	—	—	—	—	—	—	—	—	—	—	—	—	—	—	—	—	—
						—	—	—	—	—	—	—	—	—	—	—	—	—	—	—	—	—	—	—	—
153	204	308	5.00	30.00	5.67	—	—	—	—	—	—	—	—	—	—	—	—	—	—	—	—	—	19.4	22.4	26.5
			*			—	—	—	—	—	—	—	—	—	—	—	—	—	—	—	—	—	0.7	0.8	0.9
153	204	308	6.40	38.00	5.68	—	—	—	—	—	—	—	—	—	—	—	—	—	—	—	—	—	—	—	—
						—	—	—	—	—	—	—	—	—	—	—	—	—	—	—	—	—	—	—	—
149	198	299	6.20	38.00	5.85	—	—	—	—	—	—	—	—	—	—	—	—	—	—	—	—	—	—	—	—
						—	—	—	—	—	—	—	—	—	—	—	—	—	—	—	—	—	—	—	—
148	197	297	4.80	30.00	5.89	—	—	—	—	—	—	—	—	—	—	—	—	—	—	—	—	—	19.5	22.5	26.6
			*			—	—	—	—	—	—	—	—	—	—	—	—	—	—	—	—	—	0.7	0.8	0.9
144	192	290	6.00	38.00	6.04	—	—	—	—	—	—	—	—	—	—	—	—	—	—	—	—	—	—	—	—
						—	—	—	—	—	—	—	—	—	—	—	—	—	—	—	—	—	—	—	—
142	189	285	4.60	30.00	6.13	—	—	—	—	—	—	—	—	—	—	—	—	—	—	—	—	—	19.6	22.7	26.7
			*			—	—	—	—	—	—	—	—	—	—	—	—	—	—	—	—	—	0.7	0.8	0.9
140	186	281	5.80	38.00	6.24	—	—	—	—	—	—	—	—	—	—	—	—	—	—	—	—	—	—	—	—
						—	—	—	—	—	—	—	—	—	—	—	—	—	—	—	—	—	—	—	—
135	180	272	5.60	38.00	6.45	—	—	—	—	—	—	—	—	—	—	—	—	—	—	—	—	—	—	—	—
						—	—	—	—	—	—	—	—	—	—	—	—	—	—	—	—	—	—	—	—
130	174	262	5.40	38.00	6.67	—	—	—	—	—	—	—	—	—	—	—	—	—	—	—	—	—	—	—	—
						—	—	—	—	—	—	—	—	—	—	—	—	—	—	—	—	—	—	—	—
126	168	253	5.20	38.00	6.91	—	—	—	—	—	—	—	—	—	—	—	—	—	—	—	—	—	—	—	—
			*			—	—	—	—	—	—	—	—	—	—	—	—	—	—	—	—	—	—	—	—
121	162	244	5.00	38.00	7.17	—	—	—	—	—	—	—	—	—	—	—	—	—	—	—	—	—	—	—	—
			*			—	—	—	—	—	—	—	—	—	—	—	—	—	—	—	—	—	—	—	—
117	156	235	4.80	38.00	7.45	—	—	—	—	—	—	—	—	—	—	—	—	—	—	—	—	—	—	—	—
			*			—	—	—	—	—	—	—	—	—	—	—	—	—	—	—	—	—	—	—	—
112	150	226	4.60	38.00	7.75	—	—	—	—	—	—	—	—	—	—	—	—	—	—	—	—	—	—	—	—
			*			—	—	—	—	—	—	—	—	—	—	—	—	—	—	—	—	—	—	—	—

* Diameters below RMA minimum for other than Cog-Belt V-belts. Use with Super Blue Ribbon or Aramax V-belts will result in reduced life and loss of efficiency.

CLASSICAL SECTION PRE-ENGINEERED DRIVE SELECTION TABLES

B, BP, BK, BX PRE-ENGINEERED TABLES — RATIO 5.36 - 7.75

V-Belt Number and Center Distance (Other sizes may be available, see page 216)															Sheave Datum Diameters		Rated HP per Belt (Includes Added HP for Speed Ratio)								
																	Super Blue Ribbon & Aramax BP & BK RPM of Small Sheave			Super II (B) RPM of Small Sheave			Gold Label Cog-Belt (BX) RPM of Small Sheave		
B 120	B 128	B 136	B 144	B 154	B 158	B 173	B 180	B 195	B 210	B 225	B 240	B 255	B 270	B 300	Small Sheave	Large Sheave	870 RPM	1160 RPM	1750 RPM	870 RPM	1160 RPM	1750 RPM	870 RPM	1160 RPM	1750 RPM
—	24.8	29.6	34.2	39.6	41.8	49.8	53.4	61.2	68.9	75.9	83.5	91.1	98.7	113.9	6.80	38.00	6.96	8.73	11.70	7.24	9.09	12.22	7.65	9.58	12.90
—	0.8	0.9	0.9	0.9	1.0	1.0	1.0	1.0	1.1	1.1	1.1	1.1	1.1	1.2											
30.8	35.1	39.3	43.5	48.7	50.7	58.4	62.0	69.7	77.3	84.1	91.7	99.2	106.8	121.9	5.20	30.00	4.63	5.77	7.74	5.10	6.39	8.64	5.75	7.21	9.80
0.9	0.9	1.0	1.0	1.0	1.0	1.0	1.1	1.1	1.1	1.1	1.1	1.1	1.1	1.2	*										
—	24.9	29.7	34.3	39.8	41.9	49.9	53.6	61.4	69.1	76.0	83.6	91.3	98.9	114.0	6.60	38.00	6.67	8.37	11.23	6.98	8.76	11.80	7.42	9.30	12.53
—	0.8	0.9	0.9	0.9	1.0	1.0	1.0	1.0	1.1	1.1	1.1	1.1	1.1	1.2											
30.9	35.2	39.4	43.6	48.8	50.9	58.6	62.2	69.8	77.4	84.2	91.8	99.4	106.9	122.0	5.00	30.00	4.33	5.39	7.22	4.82	6.04	8.17	5.50	6.90	9.39
0.9	0.9	1.0	1.0	1.0	1.0	1.0	1.1	1.1	1.1	1.1	1.1	1.1	1.1	1.2	*										
—	25.0	29.8	34.4	39.9	42.1	50.0	53.7	61.5	69.2	76.1	83.8	91.4	99.0	114.2	6.40	38.00	6.39	8.00	10.75	6.72	8.43	11.36	7.19	9.01	12.16
—	0.8	0.9	0.9	0.9	1.0	1.0	1.1	1.1	1.1	1.1	1.1	1.1	1.1	1.2											
—	25.2	30.0	34.5	40.0	42.2	50.2	53.8	61.6	69.4	76.3	83.9	91.6	99.2	114.3	6.20	38.00	6.10	7.64	10.26	6.45	8.09	10.92	6.95	8.71	11.78
—	0.8	0.9	0.9	0.9	1.0	1.0	1.0	1.0	1.1	1.1	1.1	1.1	1.1	1.2											
31.0	35.3	39.6	43.8	48.9	51.0	58.7	62.3	69.9	77.5	84.4	92.0	99.5	107.1	122.2	4.80	30.00	4.03	5.01	6.69	4.55	5.69	7.69	5.25	6.59	8.97
0.9	0.9	1.0	1.0	1.0	1.0	1.0	1.0	1.1	1.1	1.1	1.1	1.1	1.1	1.2	*										
—	25.3	30.1	34.6	40.2	42.3	50.3	54.0	61.8	69.5	76.4	84.1	91.7	99.3	114.5	6.00	38.00	5.81	7.27	9.77	6.18	7.76	10.48	6.71	8.42	11.39
—	0.8	0.9	0.9	0.9	1.0	1.0	1.0	1.0	1.1	1.1	1.1	1.1	1.1	1.2											
31.1	35.5	39.7	43.9	49.1	51.1	58.9	62.4	70.1	77.7	84.5	92.1	99.7	107.2	122.3	4.60	30.00	3.73	4.63	6.16	4.27	5.34	7.21	5.00	6.28	8.55
0.9	0.9	1.0	1.0	1.0	1.0	1.0	1.0	1.1	1.1	1.1	1.1	1.1	1.1	1.2	*										
—	25.4	30.2	34.8	40.3	42.4	50.4	54.1	61.9	69.6	76.6	84.2	91.8	99.4	114.6	5.80	38.00	5.51	6.90	9.27	5.91	7.42	10.03	6.47	8.12	11.01
—	0.8	0.9	0.9	0.9	1.0	1.0	1.0	1.0	1.1	1.1	1.1	1.1	1.1	1.2											
—	25.5	30.3	34.9	40.4	42.6	50.6	54.2	62.0	69.8	76.7	84.4	92.0	99.6	114.8	5.60	38.00	5.22	6.53	8.77	5.64	7.08	9.57	6.23	7.82	10.61
—	0.8	0.9	0.9	0.9	1.0	1.0	1.0	1.0	1.1	1.1	1.1	1.1	1.1	1.2											
—	25.6	30.5	35.0	40.5	42.7	50.7	54.4	62.2	69.9	76.8	84.5	92.1	99.7	114.9	5.40	38.00	4.92	6.15	8.26	5.37	6.74	9.11	5.99	7.52	10.21
—	0.8	0.9	0.9	0.9	1.0	1.0	1.0	1.0	1.1	1.1	1.1	1.1	1.1	1.2											
—	25.7	30.6	35.1	40.7	42.8	50.8	54.5	62.3	70.1	77.0	84.6	92.3	99.9	115.1	5.20	38.00	4.63	5.78	7.74	5.10	6.39	8.64	5.75	7.21	9.80
—	0.8	0.9	0.9	0.9	1.0	1.0	1.0	1.0	1.1	1.1	1.1	1.1	1.1	1.2	*										
—	25.9	30.7	35.3	40.8	43.0	51.0	54.6	62.4	70.2	77.1	84.8	92.4	100.0	115.2	5.00	38.00	4.33	5.40	7.22	4.82	6.04	8.17	5.50	6.90	9.39
—	0.8	0.9	0.9	0.9	1.0	1.0	1.0	1.0	1.1	1.1	1.1	1.1	1.1	1.2	*										
—	26.0	30.8	35.4	40.9	43.1	51.1	54.8	62.6	70.3	77.3	84.9	92.5	100.2	115.3	4.80	38.00	4.03	5.01	6.69	4.55	5.69	7.69	5.25	6.59	8.97
—	0.8	0.9	0.9	0.9	1.0	1.0	1.0	1.0	1.1	1.1	1.1	1.1	1.1	1.2	*										
	26.1	30.9	35.5	41.0	43.2	51.2	54.9	62.7	70.5	77.4	85.1	92.7	100.3	115.5	4.60	38.00	3.73	4.63	6.16	4.27	5.34	7.21	5.01	6.28	8.55
—	0.8	0.9	0.9	0.9	1.0	1.0	1.0	1.0	1.1	1.1	1.1	1.1	1.1	1.2	*										

* Diameters below RMA minimum for other than Cog-Belt V-belts. Use with Super Blue Ribbon or Aramax V-belts will result in reduced life and loss of efficiency.

CLASSICAL SECTION PRE-ENGINEERED DRIVE SELECTION TABLES

C, CP, CK, CX PRE-ENGINEERED TABLES RATIO 1.00 - 1.10

Driven Speed for Motor Speed of			Sheave Datum Diameters		V-Belt Number and Center Distance (other sizes may be available, see page 217)																			
870 RPM	1160 RPM	1750 RPM	Small Sheave	Large Sheave	Speed Ratio	C 51	C 55	C 60	C 71	C 75	C 81	C 85	C 90	C 96	C 100	C 105	C 115	C 128	C 136	C 144	C 158	C 162	C 173
870	1160	1750	6.00	6.00	1.00	17.5	19.5	22.0	27.5	29.5	32.5	34.5	37.0	40.0	42.0	44.5	59.5	56.0	60.0	64.0	71.0	73.0	78.5
			*			0.8	0.9	0.9	0.9	0.9	0.9	0.9	0.9	0.9	0.9	1.0	1.0	1.0	1.0	1.0	1.0	1.0	1.0
870	1160	1750	7.00	7.00	1.00	16.0	18.0	20.5	26.0	28.0	31.0	33.0	35.5	38.5	40.5	43.0	48.0	54.5	58.5	62.5	69.5	71.5	77.0
			*			0.8	0.9	0.9	0.9	0.9	0.9	0.9	0.9	0.9	0.9	1.0	1.0	1.0	1.0	1.0	1.0	1.0	1.0
870	1160	1750	7.50	7.50	1.00	15.2	17.2	19.7	25.2	27.2	30.2	32.2	34.7	37.7	39.7	42.2	47.2	53.7	57.7	61.7	68.7	70.7	76.2
			*			0.8	0.9	0.9	0.9	0.9	0.9	0.9	0.9	0.9	0.9	1.0	1.0	1.0	1.0	1.0	1.0	1.0	1.0
870	1160	1750	8.00	8.00	1.00	14.4	16.4	18.9	24.4	26.4	29.4	31.4	33.9	36.9	38.9	41.4	46.4	52.9	56.9	60.9	67.9	69.9	75.4
			*			0.8	0.9	0.9	0.9	0.9	0.9	0.9	0.9	0.9	0.9	1.0	1.0	1.0	1.0	1.0	1.0	1.0	1.0
870	1160	1750	8.50	8.50	1.00	13.6	15.6	18.1	23.6	25.6	28.6	30.6	33.1	36.1	38.1	40.6	45.6	52.1	56.1	60.1	67.1	69.1	74.6
			*			0.8	0.9	0.9	0.9	0.9	0.9	0.9	0.9	0.9	0.9	1.0	1.0	1.0	1.0	1.0	1.0	1.0	1.0
870	1160	1750	9.00	9.00	1.00	12.8	14.8	17.3	22.8	24.8	27.8	29.8	32.3	35.3	37.3	39.8	44.8	51.3	55.3	59.3	66.3	68.3	73.8
						0.8	0.9	0.9	0.9	0.9	0.9	0.9	0.9	0.9	0.9	1.0	1.0	1.0	1.0	1.0	1.0	1.0	1.0
870	1160	1750	9.50	9.50	1.00	12.0	14.0	16.5	22.0	24.0	27.0	29.0	31.5	34.5	36.5	39.0	44.0	50.5	54.5	58.5	65.5	67.5	73.0
						0.8	0.9	0.9	0.9	0.9	0.9	0.9	0.9	0.9	0.9	1.0	1.0	1.0	1.0	1.0	1.0	1.0	1.0
870	1160	1750	10.00	10.00	1.00	—	13.3	15.8	21.3	23.3	26.3	28.3	30.8	33.8	35.8	38.3	43.3	49.8	53.8	57.8	64.8	66.8	72.3
						—	0.9	0.9	0.9	0.9	0.9	0.9	0.9	0.9	0.9	1.0	1.0	1.0	1.0	1.0	1.0	1.0	1.0
870	1160	1750	10.50	10.50	1.00	—	12.5	15.0	20.5	22.5	25.5	27.5	30.0	33.0	35.0	37.5	42.5	49.0	53.0	57.0	64.0	66.0	71.5
						—	0.9	0.9	0.9	0.9	0.9	0.9	0.9	0.9	0.9	1.0	1.0	1.0	1.0	1.0	1.0	1.0	1.0
870	1160	1750	11.00	11.00	1.00	—	—	14.2	19.7	21.7	24.7	26.7	29.2	32.2	34.2	36.7	41.7	48.2	52.2	56.2	63.2	65.2	70.0
						—	—	0.9	0.9	0.9	0.9	0.9	0.9	0.9	0.9	1.0	1.0	1.0	1.0	1.0	1.0	1.0	1.0
870	1160	1750	12.00	12.00	1.00	—	—	—	18.1	20.1	23.1	25.1	27.6	30.6	32.6	35.1	40.1	46.6	50.6	54.6	61.6	63.6	69.1
						—	—	—	0.9	0.9	0.9	0.9	0.9	0.9	0.9	1.0	1.0	1.0	1.0	1.0	1.0	1.0	1.0
870	1160	1750	13.00	13.00	1.00	—	—	—	16.6	18.6	21.6	23.6	26.1	29.1	31.1	33.6	38.6	45.1	49.1	53.1	60.1	62.1	67.6
						—	—	—	0.9	0.9	0.9	0.9	0.9	0.9	0.9	1.0	1.0	1.0	1.0	1.0	1.0	1.0	1.0
870	1160	1750	14.00	14.00	1.00	—	—	—	—	17.0	20.0	22.0	24.5	27.5	29.5	32.0	37.0	43.5	47.5	51.5	58.5	60.5	66.0
						—	—	—	—	0.9	0.9	0.9	0.9	0.9	0.9	1.0	1.0	1.0	1.0	1.0	1.0	1.0	1.0
870	1160	1750	16.00	16.00	1.00	—	—	—	—	—	—	18.8	21.3	24.3	26.3	28.8	33.8	40.3	44.3	48.3	55.3	57.3	62.8
						—	—	—	—	—	—	0.9	0.9	0.9	0.9	1.0	1.0	1.0	1.0	1.0	1.0	1.0	1.0
832	1109	1673	10.50	11.00	1.05	—	—	14.6	20.1	22.1	25.1	27.1	29.6	32.6	34.6	37.1	42.1	48.6	52.6	56.6	63.6	65.6	71.1
						—	—	0.9	0.9	0.9	0.9	0.9	0.9	0.9	0.9	1.0	1.0	1.0	1.0	1.0	1.0	1.0	1.0
830	1107	1670	10.00	10.50	1.05	—	12.9	15.4	20.9	22.9	25.9	27.9	30.4	33.4	35.4	37.9	42.9	49.4	53.4	57.4	64.4	66.4	71.9
						—	0.9	0.9	0.9	0.9	0.9	0.9	0.9	0.9	0.9	1.0	1.0	1.0	1.0	1.0	1.0	1.0	1.0
828	1104	1666	9.50	10.00	1.05	11.7	13.7	16.2	31.7	23.7	26.7	28.7	31.2	34.2	36.2	38.7	43.7	50.2	54.2	58.2	65.2	67.2	72.7
						0.8	0.9	0.9	0.9	0.9	0.9	0.9	0.9	0.9	0.9	1.0	1.0	1.0	1.0	1.0	1.0	1.0	1.0
826	1101	1662	9.00	9.50	1.05	12.4	14.4	16.9	22.4	24.4	27.4	29.4	31.9	34.9	36.9	39.4	44.4	50.9	54.9	58.9	65.9	67.9	73.4
						0.8	0.9	0.9	0.9	0.9	0.9	0.9	0.9	0.9	0.9	1.0	1.0	1.0	1.0	1.0	1.0	1.0	1.0
824	1098	1657	8.50	9.00	1.06	13.2	15.2	17.7	23.2	25.2	28.2	30.2	32.7	35.7	37.7	40.2	45.2	51.7	55.7	59.7	66.7	68.7	74.2
			*			0.8	0.9	0.9	0.9	0.9	0.9	0.9	0.9	0.9	0.9	1.0	1.0	1.0	1.0	1.0	1.0	1.0	1.0
821	1095	1652	8.00	8.50	1.06	14.0	16.0	18.5	24.0	26.0	29.0	31.0	33.5	36.5	38.5	41.0	46.0	52.5	56.5	60.5	67.5	69.5	75.0
			*			0.8	0.9	0.9	0.9	0.9	0.9	0.9	0.9	0.9	0.9	1.0	1.0	1.0	1.0	1.0	1.0	1.0	1.0
818	1091	1646	7.50	8.00	1.06	14.8	16.8	19.3	24.8	26.8	29.8	31.8	34.3	37.3	39.3	41.8	46.8	53.3	57.3	61.3	68.3	70.3	75.8
			*			0.8	0.9	0.9	0.9	0.9	0.9	0.9	0.9	0.9	0.9	1.0	1.0	1.0	1.0	1.0	1.0	1.0	1.0
815	1087	1639	7.00	7.50	1.07	15.6	17.6	20.1	25.6	27.6	30.6	32.6	35.1	38.1	40.1	42.6	47.6	54.1	58.1	62.1	69.1	71.1	76.6
			*			0.8	0.9	0.9	0.9	0.9	0.9	0.9	0.9	0.9	0.9	1.0	1.0	1.0	1.0	1.0	1.0	1.0	1.0
810	1079	1628	13.00	14.00	1.07	—	—	—	15.8	17.8	20.8	22.8	25.3	28.3	30.3	32.8	37.8	44.3	48.3	52.3	59.3	61.3	66.8
						—	—	—	0.9	0.9	0.9	0.9	0.9	0.9	0.9	0.9	1.0	1.0	1.0	1.0	1.0	1.0	1.0
805	1073	1619	12.00	13.00	1.08	—	—	—	17.3	19.3	22.3	24.3	26.8	29.8	31.8	34.3	39.3	45.8	49.8	53.8	60.8	62.8	68.3
						—	—	—	0.9	0.9	0.9	0.9	0.9	0.9	0.9	0.9	1.0	1.0	1.0	1.0	1.0	1.0	1.0
800	1066	1609	11.00	12.00	1.09	—	—	—	18.9	20.9	23.9	25.9	28.4	31.4	33.4	35.9	40.9	47.4	51.4	55.4	62.4	64.4	69.9
						—	—	—	0.9	0.9	0.9	0.9	0.9	0.9	0.9	0.9	1.0	1.0	1.0	1.0	1.0	1.0	1.0
794	1058	1596	10.00	11.00	1.10	—	12.5	15.0	20.5	22.5	25.5	27.5	30.0	33.0	35.0	37.5	42.5	79.0	53.0	57.0	64.0	66.0	71.5
						—	0.8	0.9	0.9	0.9	0.9	0.9	0.9	0.9	0.9	0.9	1.0	1.0	1.0	1.0	1.0	1.0	1.0
790	1054	1589	9.50	10.50	1.10	—	13.3	15.8	21.3	23.3	26.3	28.3	30.8	33.8	35.8	38.3	43.3	49.8	53.8	57.8	64.8	66.8	72.3
						—	0.8	0.9	0.9	0.9	0.9	0.9	0.9	0.9	0.9	0.9	1.0	1.0	1.0	1.0	1.0	1.0	1.0

* Diameters below RMA minimum for other than Cog-Belt V-belts. Use with Super Blue Ribbon or Aramax V-belts will result in reduced life and loss of efficiency.

⚠ **WARNING** ** = Sheave Rim Speed over 6000 feet per minute - see Page 236

CLASSICAL SECTION PRE-ENGINEERED DRIVE SELECTION TABLES

C, CP, CK, CX PRE-ENGINEERED TABLES — RATIO 1.00 - 1.10

V-Belt Number and Center Distance (Other sizes may be available, see page 217)													Sheave Datum Diameters		Rated HP per Belt (Includes Added HP for Speed Ratio)								
															Super Blue Ribbon & Aramax (CP & CK) RPM of Small Sheave			Super II (C) RPM of Small Sheave			Gold Label Cog-Belt (CX) RPM of Small Sheave		
C 180	C 195	C 210	C 225	C 240	C 255	C 270	C 285	C 300	C 345	C 360	C 390	C 420	Small Sheave	Large Sheave	870 RPM	1160 RPM	1750 RPM	870 RPM	1160 RPM	1750 RPM	870 RPM	1160 RPM	1750 RPM
82.0	89.5	97.0	103.5	111.0	118.5	126.0	133.5	141.0	163.5	171.0	186.0	201.0	6.00	6.00	5.57	6.66	8.07	7.17	8.79	11.29	9.32	11.62	15.57
1.0	1.0	1.1	1.1	1.1	1.1	1.1	1.1	1.1	1.1	1.1	1.2	1.2											
80.5	88.0	95.5	102.0	109.5	117.0	124.5	132.0	139.5	162.0	169.5	184.5	199.5	7.00	7.00	7.98	9.69	12.09	9.42	11.61	15.00	11.39	14.22	18.97
1.0	1.0	1.1	1.1	1.1	1.1	1.1	1.1	1.1	1.1	1.1	1.2	1.2											
79.7	87.2	94.7	101.2	108.7	116.2	123.7	131.2	138.7	161.2	168.7	183.7	198.7	7.50	7.50	9.16	11.17	14.00	10.52	12.99	16.76	12.40	15.48	20.59
1.0	1.0	1.1	1.1	1.1	1.1	1.1	1.1	1.1	1.1	1.1	1.2	1.2											
78.9	86.4	93.9	100.4	107.9	115.4	122.9	130.4	137.9	160.4	167.9	182.9	197.9	8.00	8.00	10.33	12.62	15.84	11.61	14.33	18.46	13.40	16.71	22.15
1.0	1.0	1.1	1.1	1.1	1.1	1.1	1.1	1.1	1.1	1.1	1.2	1.2											
78.1	85.6	93.1	99.6	107.1	114.6	122.1	129.6	137.1	159.6	167.1	182.1	197.1	8.50	8.50	11.48	14.05	17.62	12.68	15.66	20.09	14.39	17.93	23.65
1.0	1.0	1.1	1.1	1.1	1.1	1.1	1.1	1.1	1.1	1.1	1.2	1.2											
77.3	84.8	92.3	98.8	106.3	113.8	121.3	128.8	136.3	158.8	166.3	181.3	196.3	9.00	9.00	12.62	15.45	19.32	13.74	16.95	21.65	15.36	19.11	25.09
1.0	1.0	1.1	1.1	1.1	1.1	1.1	1.1	1.1	1.1	1.1	1.2	1.2											
76.5	84.0	91.5	98.0	105.5	113.0	120.5	128.0	135.5	158.0	165.5	180.5	195.5	9.50	9.50	13.74	16.82	20.94	14.79	18.22	23.14	16.32	20.28	26.47
1.0	1.0	1.1	1.1	1.1	1.1	1.1	1.1	1.1	1.1	1.1	1.2	1.2											
75.8	83.3	90.8	97.2	104.7	112.2	119.7	127.2	134.7	157.2	164.7	179.7	194.7	10.00	10.00	14.85	18.17	22.49	15.82	19.47	24.55	17.26	21.42	27.78
1.0	1.0	1.1	1.1	1.1	1.1	1.1	1.1	1.1	1.1	1.1	1.2	1.2											
75.0	82.5	90.0	96.5	104.0	111.5	119.0	126.5	134.0	156.5	164.0	179.0	194.0	10.50	10.50	15.95	19.49	23.96	16.84	20.69	25.89	18.20	22.54	29.02
1.0	1.0	1.1	1.1	1.1	1.1	1.1	1.1	1.1	1.1	1.1	1.2	1.2											
74.2	81.7	89.2	95.7	103.2	110.7	118.2	125.7	133.2	155.7	163.2	178.2	1932	11.00	11.00	17.03	20.78	25.35	17.84	21.88	27.15	19.12	26.63	30.20
1.0	1.0	1.1	1.1	1.1	1.1	1.1	1.1	1.1	1.1	1.1	1.2	1.2											
72.6	80.1	87.6	94.1	101.6	109.1	116.6	124.1	131.6	154.1	161.6	176.6	191.6	12.00	12.00	19.15	23.27	27.86	19.80	24.17	29.42	20.92	25.74	32.34
1.0	1.0	1.1	1.1	1.1	1.1	1.1	1.1	1.1	1.1	1.1	1.2	1.2											
71.1	78.6	86.1	92.5	100.0	107.5	115.0	122.5	130.0	152.5	160.0	175.0	190.0	13.00	13.00	21.21	25.64	30.00	21.71	26.35	31.34	22.66	27.75	34.18
1.0	1.0	1.1	1.1	1.1	1.1	1.1	1.1	1.1	1.1	1.1	1.2	1.2											
69.5	77.0	84.5	91.0	98.5	106.0	113.5	121.0	128.5	151.0	158.5	173.5	188.5	14.00	14.00	23.20	27.88	**	23.55	28.41	**	24.36	29.64	**
1.0	1.0	1.1	1.1	1.1	1.1	1.1	1.1	1.1	1.1	1.1	1.2	1.2											
66.3	73.8	81.3	87.8	95.3	102.8	110.3	117.8	125.3	147.8	155.3	170.3	185.3	16.00	16.00	27.00	31.96	**	27.05	32.13	**	27.57	33.10	**
1.0	1.0	1.1	1.1	1.1	1.1	1.1	1.1	1.1	1.1	1.1	1.2	1.2											
74.6	82.1	89.6	96.1	103.6	111.1	118.6	126.1	133.6	156.1	163.6	178.6	193.6	10.50	11.00	16.14	19.74	24.35	17.03	20.94	26.27	18.39	22.79	29.41
1.0	1.0	1.1	1.1	1.1	1.1	1.1	1.1	1.1	1.1	1.1	1.2	1.2											
75.4	82.9	90.4	96.8	104.3	111.8	119.3	126.8	134.3	156.8	164.3	179.3	194.3	10.00	10.50	15.05	18.44	22.89	16.02	19.73	24.95	17.46	21.69	28.18
1.0	1.0	1.1	1.1	1.1	1.1	1.1	1.1	1.1	1.1	1.1	1.2	1.2											
76.2	83.7	91.2	97.6	105.1	112.6	120.1	127.6	135.1	157.6	165.1	180.1	195.1	9.50	10.00	13.95	17.10	21.36	14.99	18.50	23.55	16.53	20.56	26.88
1.0	1.0	1.1	1.1	1.1	1.1	1.1	1.1	1.1	1.1	1.1	1.2	1.2											
76.9	84.4	91.9	98.4	105.9	113.4	120.9	128.4	135.9	158.4	165.9	180.9	195.9	9.00	9.50	12.83	15.74	19.75	13.96	17.24	22.09	15.58	19.40	25.53
1.0	1.0	1.1	1.1	1.1	1.1	1.1	1.1	1.1	1.1	1.1	1.2	1.2											
77.7	85.2	92.7	99.2	106.7	114.2	121.7	129.2	136.7	159.2	166.7	181.7	196.7	8.50	9.00	11.71	14.36	18.07	12.91	15.96	20.55	14.61	18.23	24.11
1.0	1.0	1.1	1.1	1.1	1.1	1.1	1.1	1.1	1.1	1.1	1.2	1.2											
78.5	86.0	93.5	100.0	107.5	115.0	122.5	130.0	137.5	160.0	167.5	182.5	197.5	8.00	8.50	10.57	12.94	16.32	11.85	14.65	18.94	13.64	17.03	22.63
1.0	1.0	1.1	1.1	1.1	1.1	1.1	1.1	1.1	1.1	1.1	1.2	1.2											
79.3	86.8	94.3	100.8	108.3	115.8	123.3	130.8	138.3	160.8	168.3	183.3	198.3	7.50	8.00	9.41	11.51	14.51	10.77	13.32	17.27	12.65	15.81	21.10
1.0	1.0	1.1	1.1	1.1	1.1	1.1	1.1	1.1	1.1	1.1	1.2	1.2											
80.1	87.6	95.1	101.6	109.1	116.6	124.1	131.6	139.1	161.6	169.1	184.1	199.1	7.00	7.50	8.24	10.05	12.62	9.69	11.97	15.54	11.65	14.57	19.51
1.0	1.0	1.1	1.1	1.1	1.1	1.1	1.1	1.1	1.1	1.1	1.2	1.2											
70.3	77.8	85.3	91.7	99.2	106.7	114.2	121.7	129.2	151.7	159.2	174.2	189.2	13.00	14.00	21.50	26.03	30.59	22.00	26.74	31.92	22.95	28.13	34.76
1.0	1.0	1.1	1.1	1.1	1.1	1.1	1.1	1.1	1.1	1.1	1.2	1.2											
71.8	79.3	86.8	93.3	100.8	108.3	115.8	123.3	130.8	153.3	160.8	175.8	190.8	12.00	13.00	19.46	23.68	28.48	20.11	24.58	30.04	21.23	26.15	32.96
1.0	1.0	1.1	1.1	1.1	1.1	1.1	1.1	1.1	1.1	1.1	1.2	1.2											
73.4	80.9	88.4	94.9	102.4	109.9	117.4	124.9	132.4	154.9	162.4	177.4	192.4	11.00	12.00	17.36	21.22	26.01	18.17	22.32	27.81	19.45	24.07	30.86
1.0	1.0	1.1	1.1	1.1	1.1	1.1	1.1	1.1	1.1	1.1	1.2	1.2											
75.0	82.5	90.0	96.5	104.0	111.5	119.0	126.5	134.0	156.5	164.0	179.0	194.0	10.00	11.00	15.21	18.65	23.21	16.17	19.94	25.27	17.62	21.90	28.49
1.0	1.0	1.1	1.1	1.1	1.1	1.1	1.1	1.1	1.1	1.1	1.2	1.2											
75.8	83.3	90.8	97.2	104.7	112.2	119.7	127.2	134.7	157.2	164.7	179.7	194.7	9.50	10.50	14.11	17.32	21.69	15.16	18.72	23.88	16.69	20.77	27.21
1.0	1.0	1.1	1.1	1.1	1.1	1.1	1.1	1.1	1.1	1.1	1.2	1.2											

* Diameters below RMA minimum for other than Cog-Belt V-belts. Use with Super Blue Ribbon or Aramax V-belts will result in reduced life and loss of efficiency.

⚠ **WARNING** ** = Sheave Rim Speed over 6000 feet per minute - see Page 236

CLASSICAL SECTION PRE-ENGINEERED DRIVE SELECTION TABLES

C, CP, CK, CX PRE-ENGINEERED TABLES RATIO 1.11 - 1.25

Driven Speed for Motor Speed of			Sheave Datum Diameters		V-Belt Number and Center Distance (other sizes may be available, see page 217)																			
870 RPM	1160 RPM	1750 RPM	Small Sheave	Large Sheave	Speed Ratio	C 51	C 55	C 60	C 71	C 75	C 81	C 85	C 90	C 96	C 100	C 105	C 115	C 128	C 136	C 144	C 158	C 162	C 173
786	1048	1582	9.00	10.00	1.11	12.0	14.0	16.5	22.0	24.0	27.0	29.0	31.5	34.5	36.5	39.0	44.0	50.5	54.5	58.5	65.5	67.5	73.0
						0.8	0.8	0.9	0.9	0.9	0.9	0.9	0.9	0.9	0.9	0.9	1.0	1.0	1.0	1.0	1.0	1.0	1.0
782	1043	1573	8.50	9.50	1.11	12.8	14.8	17.3	22.8	24.8	27.8	29.8	32.3	35.3	37.3	39.8	44.8	51.3	55.3	59.3	66.3	68.3	73.8
			*			0.8	0.8	0.9	0.9	0.9	0.9	0.9	0.9	0.9	0.9	0.9	1.0	1.0	1.0	1.0	1.0	1.0	1.0
777	1037	1564	8.00	9.00	1.12	13.6	15.6	18.1	23.6	25.6	28.6	30.6	33.1	36.1	38.1	40.6	45.6	52.1	56.1	60.1	67.1	69.1	74.6
			*			0.8	0.8	0.9	0.9	0.9	0.9	0.9	0.9	0.9	0.9	0.9	1.0	1.0	1.0	1.0	1.0	1.0	1.0
775	1034	1560	16.00	18.00	1.12	—	—	—	—	—	—	—	19.7	22.7	24.7	27.2	32.3	38.8	42.8	46.8	53.8	55.8	61.3
						—	—	—	—	—	—	—	0.9	0.9	0.9	0.9	1.0	1.0	1.0	1.0	1.0	1.0	1.0
772	1030	1553	7.50	8.50	1.13	14.4	16.4	18.9	24.4	26.4	29.4	31.4	33.9	36.9	38.9	41.4	46.4	52.9	56.9	60.9	67.9	69.9	75.4
			*			0.8	0.8	0.9	0.9	0.9	0.9	0.9	0.9	0.9	0.9	0.9	1.0	1.0	1.0	1.0	1.0	1.0	1.0
766	1022	1542	7.00	8.00	1.14	15.2	17.2	19.7	25.2	27.2	30.2	32.2	34.7	37.7	39.7	42.2	47.2	53.7	57.7	61.7	68.7	70.7	76.2
			*			0.8	0.8	0.9	0.9	0.9	0.9	0.9	0.9	0.9	0.9	0.9	1.0	1.0	1.0	1.0	1.0	1.0	1.0
765	1020	1538	10.50	12.00	1.14	—	—	13.8	19.3	21.3	24.3	26.3	28.8	31.8	33.8	36.3	41.3	47.8	51.8	55.8	62.8	64.8	70.3
						—	—	0.9	0.9	0.9	0.9	0.9	0.9	0.9	0.9	0.9	1.0	1.0	1.0	1.0	1.0	1.0	1.0
764	1019	1537	14.00	16.00	1.14	—	—	—	—	—	18.4	20.4	22.9	25.9	27.9	30.4	35.4	41.9	45.9	49.9	56.9	58.9	64.4
						—	—	—	—	—	0.9	0.9	0.9	0.9	0.9	0.9	1.0	1.0	1.0	1.0	1.0	1.0	1.0
756	1007	1520	9.50	11.00	1.15	—	12.8	15.4	20.9	22.9	25.9	27.9	30.4	33.4	35.4	37.9	42.9	49.4	53.4	57.4	64.4	66.4	71.9
						—	0.8	0.9	0.9	0.9	0.9	0.9	0.9	0.9	0.9	0.9	1.0	1.0	1.0	1.0	1.0	1.0	1.0
752	1003	1514	6.00	7.00	1.16	16.8	18.8	21.3	26.8	28.8	31.8	33.8	36.3	39.3	41.3	43.8	48.8	55.3	59.3	63.3	70.3	72.3	77.8
			*			0.8	0.8	0.9	0.9	0.9	0.9	0.9	0.9	0.9	0.9	0.9	1.0	1.0	1.0	1.0	1.0	1.0	1.0
750	1000	1509	9.00	10.50	1.16	—	13.6	16.1	21.6	23.6	26.6	28.6	31.1	34.1	36.1	38.6	43.6	50.2	54.2	58.2	65.2	67.2	72.7
						—	0.8	0.9	0.9	0.9	0.9	0.9	0.9	0.9	0.9	0.9	1.0	1.0	1.0	1.0	1.0	1.0	1.0
749	999	1507	12.00	14.00	1.16	—	—	—	16.5	18.5	21.5	23.5	26.0	29.0	31.0	33.5	38.5	45.0	49.0	53.0	60.0	62.0	67.5
						—	—	—	0.9	0.9	0.9	0.9	0.9	0.9	0.9	0.9	1.0	1.0	1.0	1.0	1.0	1.0	1.0
745	993	1498	8.50	10.00	1.17	12.4	14.4	16.9	22.4	24.4	27.4	29.4	31.9	34.9	36.9	39.4	44.4	50.9	54.9	58.9	65.9	67.9	73.4
			*			0.8	0.8	0.9	0.9	0.9	0.9	0.9	0.9	0.9	0.9	1.0	1.0	1.0	1.0	1.0	1.0	1.0	1.0
740	987	1489	11.00	13.00	1.18	—	—	—	18.0	20.1	23.1	25.1	27.6	30.6	32.6	35.1	40.1	46.6	50.6	54.6	61.6	63.6	69.1
						—	—	—	0.9	0.9	0.9	0.9	0.9	0.9	0.9	0.9	1.0	1.0	1.0	1.0	1.0	1.0	1.0
738	984	1485	8.00	9.50	1.18	13.2	15.2	17.7	23.2	25.2	28.2	30.2	32.7	35.7	37.7	40.2	45.2	51.7	55.7	59.7	66.7	68.7	74.2
			*			0.8	0.8	0.9	0.9	0.9	0.9	0.9	0.9	0.9	0.9	0.9	1.0	1.0	1.0	1.0	1.0	1.0	1.0
731	975	1471	7.50	9.00	1.19	14.0	16.0	18.5	24.0	26.0	28.0	31.0	33.5	36.5	38.5	41.0	46.0	52.5	56.5	60.5	67.5	69.5	75.0
			*			0.8	0.8	0.9	0.9	0.9	0.9	0.9	0.9	0.9	0.9	0.9	1.0	1.0	1.0	1.0	1.0	1.0	1.0
730	973	1468	10.00	12.00	1.19	—	—	14.2	19.7	21.7	24.7	26.7	29.2	32.2	34.2	36.7	41.7	48.2	52.2	56.2	63.2	65.2	70.7
						—	—	0.9	0.9	0.9	0.9	0.9	0.9	0.9	0.9	0.9	1.0	1.0	1.0	1.0	1.0	1.0	1.0
723	964	1455	7.00	8.50	1.20	14.8	16.8	19.3	24.8	26.8	29.8	31.8	34.3	37.3	39.3	41.8	46.8	53.3	57.3	61.3	68.3	70.3	75.8
			*			0.8	0.8	0.9	0.9	0.9	0.9	0.9	0.9	0.9	0.9	0.9	1.0	1.0	1.0	1.0	1.0	1.0	1.0
717	956	1443	9.00	11.00	1.21	—	13.2	15.7	21.2	23.2	26.2	28.2	30.7	33.7	35.7	38.3	43.3	49.8	53.8	57.8	64.8	66.8	72.3
						0.8	0.8	0.9	0.9	0.9	0.9	0.9	0.9	0.9	0.9	0.9	1.0	1.0	1.0	1.0	1.0	1.0	1.0
711	948	1430	13.00	16.00	1.22	—	—	—	—	—	19.1	21.1	23.6	26.7	28.7	31.2	36.2	42.7	46.7	50.7	57.7	59.7	65.2
						—	—	—	—	—	0.9	0.9	0.9	0.9	0.9	0.9	1.0	1.0	1.0	1.0	1.0	1.0	1.0
710	947	1429	8.50	10.50	1.22	12.0	14.0	16.5	22.0	24.0	27.0	29.0	31.5	34.5	36.5	39.0	44.0	50.5	54.5	58.5	65.5	67.5	73.0
			*			0.8	0.8	0.9	0.9	0.9	0.9	0.9	0.9	0.9	0.9	0.9	1.0	1.0	1.0	1.0	1.0	1.0	1.0
708	944	1424	10.50	13.00	1.23	—	—	—	18.5	20.5	23.5	25.5	28.0	31.0	33.0	35.5	40.5	47.0	51.0	55.0	62.0	64.0	69.5
						—	—	—	0.9	0.9	0.9	0.9	0.9	0.9	0.9	0.9	1.0	1.0	1.0	1.0	1.0	1.0	1.0
705	940	1418	6.00	7.50	1.23	16.4	18.4	20.9	26.4	28.4	31.4	33.4	35.9	38.9	40.9	43.4	48.4	54.9	58.9	62.9	69.9	71.9	77.4
			*			0.8	0.8	0.9	0.9	0.9	0.9	0.9	0.9	0.9	0.9	0.9	1.0	1.0	1.0	1.0	1.0	1.0	1.0
703	937	1413	8.00	10.00	1.24	12.8	14.8	17.3	22.8	24.8	27.8	29.8	32.3	35.3	37.3	39.8	44.8	51.3	55.3	59.3	66.3	68.3	73.8
			*			0.8	0.8	0.9	0.9	0.9	0.9	0.9	0.9	0.9	0.9	0.9	1.0	1.0	1.0	1.0	1.0	1.0	1.0
699	933	1407	16.00	20.00	1.24	—	—	—	—	—	—	—	—	21.1	23.1	25.6	30.6	37.1	41.1	45.2	52.2	54.2	59.7
						—	—	—	—	—	—	—	—	0.9	0.9	0.9	0.9	1.0	1.0	1.0	1.0	1.0	1.0
695	926	1397	9.50	12.00	1.25	—	—	14.5	20.0	22.1	25.1	27.1	29.6	32.6	34.6	37.1	42.1	48.6	52.6	56.6	63.6	65.6	71.1
						—	—	0.8	0.9	0.9	0.9	0.9	0.9	0.9	0.9	0.9	1.0	1.0	1.0	1.0	1.0	1.0	1.0
694	926	1396	7.50	9.50	1.25	13.6	15.6	18.1	23.6	25.6	28.6	30.6	33.1	36.1	38.1	40.6	45.6	52.1	56.1	60.1	67.1	69.1	74.6
			*			0.8	0.8	0.9	0.9	0.9	0.9	0.9	0.9	0.9	0.9	0.9	1.0	1.0	1.0	1.0	1.0	1.0	1.0

* Diameters below RMA minimum for other than Cog-Belt V-belts. Use with Super Blue Ribbon or Aramax V-belts will result in reduced life and loss of efficiency.

⚠ **WARNING** ** = Sheave Rim Speed over 6000 feet per minute - see Page 236

CLASSICAL SECTION PRE-ENGINEERED DRIVE SELECTION TABLES

C, CP, CK, CX PRE-ENGINEERED TABLES RATIO 1.11 - 1.25

V-Belt Number and Center Distance (Other sizes may be available, see page 217)													Sheave Datum Diameters		Rated HP per Belt (Includes Added HP for Speed Ratio) Super Blue Ribbon & Aramax (CP & CK) RPM of Small Sheave			Super II (C) RPM of Small Sheave			Gold Label Cog-Belt (CX) RPM of Small Sheave		
C 180	C 195	C 210	C 225	C 240	C 255	C 270	C 285	C 300	C 345	C 360	C 390	C 420	Small Sheave	Large Sheave	870 RPM	1160 RPM	1750 RPM	870 RPM	1160 RPM	1750 RPM	870 RPM	1160 RPM	1750 RPM
76.5	84.0	91.5	98.0	105.0	113.0	120.5	128.0	135.5	158.0	165.5	180.5	195.5	9.00	10.00	13.00	15.96	20.09	14.13	17.47	22.42	15.74	19.63	25.86
1.0	1.0	1.1	1.1	1.1	1.1	1.1	1.1	1.1	1.1	1.1	1.2	1.2											
77.3	84.8	92.3	98.8	106.3	113.8	121.3	128.8	136.3	158.8	166.3	181.3	196.3	8.50	9.50	11.88	14.58	18.42	13.08	16.19	20.89	14.79	18.46	24.46
1.0	1.0	1.1	1.1	1.1	1.1	1.1	1.1	1.1	1.1	1.1	1.2	1.2											
78.1	85.6	93.1	99.6	107.1	114.6	122.1	129.6	137.1	159.6	167.1	182.1	197.1	8.00	9.00	10.74	13.18	16.68	12.03	14.89	19.30	13.82	17.27	22.99
1.0	1.0	1.1	1.1	1.1	1.1	1.1	1.1	1.1	1.1	1.1	1.2	1.2											
64.8	72.3	79.8	86.2	93.7	101.2	108.7	116.2	123.7	146.2	153.7	168.7	183.7	16.00	18.00	27.43	32.53	**	27.48	32.70	**	28.00	33.67	**
1.0	1.0	1.1	1.1	1.1	1.1	1.1	1.1	1.1	1.1	1.1	1.2	1.2											
78.9	86.4	93.9	100.4	107.9	115.4	122.9	130.4	137.9	160.4	167.9	182.9	197.9	7.50	8.50	9.59	11.75	14.88	10.96	13.57	17.64	12.84	16.06	21.47
1.0	1.0	1.1	1.1	1.1	1.1	1.1	1.1	1.1	1.1	1.1	1.2	1.2											
79.7	87.2	94.7	101.2	108.7	116.2	123.7	131.2	138.7	161.2	168.7	183.7	198.7	7.00	8.00	8.43	10.30	13.01	9.88	12.22	15.92	11.84	14.83	19.89
1.0	1.0	1.1	1.1	1.1	1.1	1.1	1.1	1.1	1.1	1.1	1.2	1.2											
73.8	81.3	88.8	95.3	102.8	110.3	117.8	125.3	132.8	155.3	162.8	177.8	192.8	10.50	12.00	16.41	20.11	24.89	17.30	21.30	26.82	18.66	23.16	29.96
1.0	1.0	1.1	1.1	1.1	1.1	1.1	1.1	1.1	1.1	1.1	1.2	1.2											
67.9	75.4	82.9	89.4	96.9	104.4	111.9	119.4	126.9	149.4	156.9	171.9	186.9	14.00	16.00	23.67	28.51	**	24.02	29.03	**	24.82	30.26	**
1.0	1.0	1.1	1.1	1.1	1.1	1.1	1.1	1.1	1.1	1.1	1.2	1.2											
75.4	82.9	90.4	96.8	104.3	111.8	119.3	126.8	134.3	156.8	164.3	179.3	194.3	9.50	11.00	14.24	17.49	21.94	15.28	18.88	24.13	16.81	20.94	27.46
1.0	1.0	1.1	1.1	1.1	1.1	1.1	1.1	1.1	1.1	1.1	1.2	1.2											
81.3	88.8	96.3	102.7	110.2	117.7	125.2	132.7	140.2	162.7	170.2	185.2	200.2	6.00	7.00	6.07	7.33	9.09	7.68	9.46	12.30	9.82	12.30	16.58
1.0	1.0	1.1	1.1	1.1	1.1	1.1	1.1	1.1	1.1	1.1	1.2	1.2											
6.2	83.7	91.2	97.6	105.1	112.6	120.1	127.6	135.1	157.6	165.1	180.1	195.1	9.00	10.50	13.13	16.13	20.35	14.25	17.64	22.68	15.87	19.80	26.12
1.0	1.0	1.1	1.1	1.1	1.1	1.1	1.1	1.1	1.1	1.1	1.2	1.2											
71.0	78.5	86.0	92.5	100.0	107.5	115.0	122.5	130.0	152.5	160.0	175.0	190.0	12.00	14.00	19.66	23.96	28.90	20.32	24.86	30.45	21.43	26.43	33.38
1.0	1.0	1.1	1.1	1.1	1.1	1.1	1.1	1.1	1.1	1.1	1.2	1.2											
76.9	84.4	91.9	98.4	105.9	113.4	120.9	128.4	135.9	158.4	165.9	180.9	195.9	8.50	10.00	12.01	14.76	18.68	13.21	16.36	21.16	14.92	18.63	24.72
1.0	1.0	1.1	1.1	1.1	1.1	1.1	1.1	1.1	1.1	1.1	1.2	1.2											
72.6	80.1	87.6	94.1	101.6	109.1	116.6	124.1	131.6	154.1	161.6	176.6	191.6	11.00	13.00	17.57	21.51	26.44	18.38	22.60	28.24	19.66	24.36	31.30
1.0	1.0	1.1	1.1	1.1	1.1	1.1	1.1	1.1	1.1	1.1	1.2	1.2											
77.7	85.2	92.7	99.2	106.7	114.2	121.7	129.2	136.7	159.2	166.7	181.7	196.7	8.00	9.50	10.88	13.36	16.95	12.16	15.07	19.57	13.95	17.45	23.26
1.0	1.0	1.1	1.1	1.1	1.1	1.1	1.1	1.1	1.1	1.1	1.2	1.2											
78.5	86.0	93.5	100.0	107.5	115.0	122.5	130.0	137.5	160.0	167.5	182.5	197.5	7.50	9.00	9.73	11.93	15.15	11.09	13.75	17.91	12.97	16.24	21.74
1.0	1.0	1.1	1.1	1.1	1.1	1.1	1.1	1.1	1.1	1.1	1.2	1.2											
74.2	81.7	89.2	95.7	103.2	110.7	118.2	125.7	133.2	155.7	163.2	178.2	193.2	10.00	12.00	15.43	18.94	23.65	16.39	20.24	25.71	17.84	22.19	28.94
1.0	1.0	1.1	1.1	1.1	1.1	1.1	1.1	1.1	1.1	1.1	1.2	1.2											
79.3	86.8	94.3	100.8	108.3	115.8	123.3	130.8	138.3	160.8	168.3	183.3	198.3	7.00	8.50	8.57	10.49	13.28	10.01	12.41	16.20	11.98	15.01	20.17
1.0	1.0	1.1	1.1	1.1	1.1	1.1	1.1	1.1	1.1	1.1	1.2	1.2											
75.8	83.3	90.8	97.2	104.7	112.2	119.7	127.2	134.7	157.2	164.7	179.7	194.7	9.00	11.00	13.23	16.27	20.55	14.35	17.77	22.88	15.97	19.93	26.32
1.0	1.0	1.1	1.1	1.1	1.1	1.1	1.1	1.1	1.1	1.1	1.2	1.2											
68.7	76.2	83.7	90.2	97.7	105.2	112.7	120.2	127.7	150.2	157.7	172.7	187.7	13.00	16.00	21.84	26.48	31.27	22.34	27.19	32.60	23.29	28.58	35.45
1.0	1.0	1.1	1.1	1.1	1.1	1.1	1.1	1.1	1.1	1.1	1.2	1.2											
76.5	84.0	91.5	98.0	105.5	113.0	120.5	128.0	135.5	158.0	165.5	180.5	195.5	8.50	10.50	12.11	14.89	18.89	13.31	16.50	21.36	15.02	18.77	24.92
1.0	1.0	1.1	1.1	1.1	1.1	1.1	1.1	1.1	1.1	1.1	1.2	1.2											
73.0	80.5	88.0	94.5	102.0	109.5	117.0	124.5	132.0	154.5	162.0	177.0	192.0	10.50	13.00	15.59	20.34	25.24	17.47	21.54	27.17	18.84	23.39	30.31
1.0	1.0	1.1	1.1	1.1	1.1	1.1	1.1	1.1	1.1	1.1	1.2	1.2											
80.9	88.4	95.9	102.3	109.8	117.3	124.8	132.3	139.8	162.3	169.8	184.8	199.8	6.00	7.50	6.21	7.52	9.37	7.82	9.65	12.59	9.96	12.49	16.86
1.0	1.0	1.1	1.1	1.1	1.1	1.1	1.1	1.1	1.1	1.1	1.2	1.2											
77.3	84.8	92.3	98.8	106.3	113.8	121.3	128.8	136.3	158.8	166.3	181.3	196.3	8.00	10.00	10.98	13.49	17.15	12.26	15.20	19.77	14.05	17.58	23.46
1.0	1.0	1.1	1.1	1.1	1.1	1.1	1.1	1.1	1.1	1.1	1.2	1.2											
63.2	70.7	78.2	84.7	92.2	99.7	107.2	114.7	122.2	144.7	152.2	167.2	182.2	16.00	20.00	27.66	32.84	**	27.71	33.01	**	28.23	33.98	**
1.0	1.0	1.1	1.1	1.1	1.1	1.1	1.1	1.1	1.1	1.1	1.2	1.2											
74.6	82.1	89.6	96.1	103.6	111.1	118.6	126.1	133.6	156.1	163.6	178.6	193.6	9.50	12.00	14.41	17.72	22.29	15.46	19.12	24.49	16.99	21.18	27.82
1.0	1.0	1.1	1.1	1.1	1.1	1.1	1.1	1.1	1.1	1.1	1.2	1.2											
78.1	85.6	93.1	99.6	107.1	114.6	122.1	129.6	137.1	159.6	167.1	182.1	197.1	7.50	9.50	9.83	12.07	15.35	11.19	13.88	18.11	13.07	16.37	21.94
1.0	1.0	1.1	1.1	1.1	1.1	1.1	1.1	1.1	1.1	1.1	1.2	1.2											

* Diameters below RMA minimum for other than Cog-Belt V-belts. Use with Super Blue Ribbon or Aramax V-belts will result in reduced life and loss of efficiency.

⚠ **WARNING** ** = Sheave Rim Speed over 6000 feet per minute - see Page 236

CLASSICAL SECTION PRE-ENGINEERED DRIVE SELECTION TABLES

C, CP, CK, CX PRE-ENGINEERED TABLES RATIO 1.26 - 1.47

Driven Speed for Motor Speed of			Sheave Datum Diameters		V-Belt Number and Center Distance (other sizes may be available, see page 217)																			
870 RPM	1160 RPM	1750 RPM	Small Sheave	Large Sheave	Speed Ratio	C 51	C 55	C 60	C 71	C 75	C 81	C 85	C 90	C 96	C 100	C 105	C 115	C 128	C 136	C 144	C 158	C 162	C 173
689	918	1385	11.00	14.00	1.26	—	—	—	17.3	19.3	22.3	24.3	26.8	29.8	31.8	34.3	39.3	45.8	49.8	53.8	60.8	62.8	68.3
						—	—	—	0.9	0.9	0.9	0.9	0.9	0.9	0.9	0.9	1.0	1.0	1.0	1.0	1.0	1.0	1.0
685	913	1378	7.00	9.00	1.27	14.4	16.4	18.9	24.4	26.4	29.4	31.4	33.9	36.9	38.9	41.4	46.4	52.9	56.9	60.9	67.9	69.9	75.4
			*			0.8	0.8	0.9	0.9	0.9	0.9	0.9	0.9	0.9	0.9	0.9	1.0	1.0	1.0	1.0	1.0	1.0	1.0
681	908	1370	14.00	18.00	1.28	—	—	—	—	—	—	18.7	21.2	24.3	26.3	28.8	33.8	40.3	44.3	48.3	55.3	57.3	62.8
						—	—	—	—	—	—	0.9	0.9	0.9	0.9	0.9	1.0	1.0	1.0	1.0	1.0	1.0	1.0
679	906	1366	8.50	11.00	1.28	—	13.6	16.1	21.6	23.6	26.6	28.6	31.1	34.1	36.1	38.6	43.6	50.1	54.1	58.1	65.1	67.1	72.6
			*			—	0.8	0.8	0.9	0.9	0.9	0.9	0.9	0.9	0.9	0.9	1.0	1.0	1.0	1.0	1.0	1.0	1.0
675	900	1358	10.00	13.00	1.29	—	—	—	18.8	20.9	23.9	25.9	28.4	31.4	33.4	35.9	40.9	47.4	51.4	55.4	62.4	64.4	69.9
						—	—	—	0.9	0.9	0.9	0.9	0.9	0.9	0.9	0.9	1.0	1.0	1.0	1.0	1.0	1.0	1.0
670	894	1349	8.00	10.50	1.30	12.4	14.4	16.9	22.4	24.4	27.4	29.4	31.9	34.9	36.9	39.4	44.4	50.9	54.9	58.9	65.9	67.9	73.4
			*			0.8	0.8	0.9	0.9	0.9	0.9	0.9	0.9	0.9	0.9	0.9	1.0	1.0	1.0	1.0	1.0	1.0	1.0
663	884	1333	6.00	8.00	1.31	15.9	17.9	20.5	26.0	28.0	31.0	33.0	35.5	38.5	40.0	43.0	48.0	54.5	58.5	62.5	69.5	71.5	77.0
						0.8	0.8	0.9	0.9	0.9	0.9	0.9	0.9	0.9	0.9	0.9	1.0	1.0	1.0	1.0	1.0	1.0	1.0
661	881	1329	7.50	10.00	1.32	13.2	15.2	17.7	23.2	25.2	28.2	30.2	32.7	35.7	37.7	40.2	45.2	51.7	55.7	59.7	66.7	68.7	74.2
			*			0.8	0.8	0.9	0.9	0.9	0.9	0.9	0.9	0.9	0.9	0.9	1.0	1.0	1.0	1.0	1.0	1.0	1.0
660	879	1327	9.00	12.00	1.32	—	—	14.9	20.4	22.4	25.4	27.4	29.9	32.9	34.9	37.4	42.5	49.0	53.0	57.0	64.0	66.0	71.5
						—	—	0.8	0.9	0.9	0.9	0.9	0.9	0.9	0.9	0.9	1.0	1.0	1.0	1.0	1.0	1.0	1.0
659	878	1325	10.50	14.00	1.32	—	—	—	17.6	19.7	22.7	24.7	27.2	30.2	32.2	34.7	39.7	46.2	50.2	54.2	61.2	63.2	68.7
						—	—	—	0.9	0.9	0.9	0.9	0.9	0.9	0.9	0.9	1.0	1.0	1.0	1.0	1.0	1.0	1.0
658	877	1323	12.00	16.00	1.32	—	—	—	—	16.9	19.9	21.9	24.4	27.4	29.4	31.9	36.9	43.4	47.4	51.4	58.4	60.4	66.0
						—	—	—	—	0.9	0.9	0.9	0.9	0.9	0.9	0.9	1.0	1.0	1.0	1.0	1.0	1.0	1.0
650	867	1308	7.00	9.50	1.34	14.0	16.0	18.5	24.0	26.0	29.0	31.0	33.5	36.5	38.5	41.0	46.0	52.5	56.5	60.5	67.5	69.5	75.0
			*			0.8	0.8	0.9	0.9	0.9	0.9	0.9	0.9	0.9	0.9	0.9	1.0	1.0	1.0	1.0	1.0	1.0	1.0
643	857	1293	9.50	13.00	1.35	-0.0	-0.0	13.7	19.2	21.2	24.2	26.2	28.7	31.8	33.8	36.3	41.3	47.8	51.8	55.8	62.8	64.8	70.3
						-0.0	-0.0	0.9	0.9	0.9	0.9	0.9	0.9	0.9	0.9	0.9	1.0	1.0	1.0	1.0	1.0	1.0	1.0
641	855	1289	8.00	11.00	1.36	12.0	14.0	16.5	22.0	24.0	27.0	29.0	31.5	34.5	36.5	39.0	44.0	50.5	54.5	58.5	65.5	67.5	73.0
			*			0.8	0.8	0.8	0.9	0.9	0.9	0.9	0.9	0.9	0.9	0.9	1.0	1.0	1.0	1.0	1.0	1.0	1.0
634	845	1274	13.00	18.00	1.37	—	—	—	—	—	17.4	19.5	22.0	25.0	27.0	29.5	34.5	41.0	45.1	49.1	56.1	58.1	63.6
						—	—	—	—	—	0.9	0.9	0.9	0.9	0.9	0.9	0.9	1.0	1.0	1.0	1.0	1.0	1.0
631	841	1268	7.50	10.50	1.38	12.7	14.8	17.3	22.8	24.8	27.8	29.8	32.3	35.3	37.3	39.8	44.8	51.3	55.3	59.3	66.3	68.3	73.8
			*			0.8	0.8	0.8	0.9	0.9	0.9	0.9	0.9	0.9	0.9	0.9	1.0	1.0	1.0	1.0	1.0	1.0	1.0
628	838	1264	10.00	14.00	1.38	—	—	—	18.0	20.0	23.0	25.0	27.5	30.6	32.6	35.1	40.1	46.6	50.6	54.6	61.6	63.6	69.1
						—	—	—	0.9	0.9	0.9	0.9	0.9	0.9	0.9	0.9	1.0	1.0	1.0	1.0	1.0	1.0	1.0
624	833	1256	8.50	12.00	1.39	—	12.8	15.3	20.8	22.8	25.8	27.8	30.3	33.3	35.3	37.8	42.8	49.3	53.3	57.3	64.3	66.3	71.8
			*			—	0.8	0.8	0.9	0.9	0.9	0.9	0.9	0.9	0.9	0.9	1.0	1.0	1.0	1.0	1.0	1.0	1.0
626	834	1258	6.00	8.50	1.39	15.5	17.5	20.0	25.6	27.6	30.6	32.6	35.1	38.1	40.1	42.6	47.6	54.1	58.1	62.1	69.1	71.1	76.6
			*			0.8	0.8	0.9	0.9	0.9	0.9	0.9	0.9	0.9	0.9	0.9	1.0	1.0	1.0	1.0	1.0	1.0	1.0
619	825	1245	7.00	10.00	1.41	13.5	15.5	18.1	23.6	25.6	28.6	30.6	33.1	36.1	38.1	40.6	45.6	52.1	56.1	60.1	67.1	69.1	74.6
			*			0.8	0.8	0.8	0.9	0.9	0.9	0.9	0.9	0.9	0.9	0.9	1.0	1.0	1.0	1.0	1.0	1.0	1.0
614	819	1235	14.00	20.00	1.42	—	—	—	—	—	—	—	19.5	22.6	24.6	27.1	32.1	38.7	42.7	46.7	53.7	55.7	61.2
						—	—	—	—	—	—	—	0.9	0.9	0.9	0.9	0.9	1.0	1.0	1.0	1.0	1.0	1.0
610	814	1228	9.00	13.00	1.43	—	—	14.1	19.6	21.6	24.6	26.6	29.1	32.1	34.1	36.6	41.6	48.2	52.2	56.2	63.2	65.2	70.7
						—	—	0.8	0.9	0.9	0.9	0.9	0.9	0.9	0.9	0.9	1.0	1.0	1.0	1.0	1.0	1.0	1.0
605	806	1216	11.00	16.00	1.44	—	—	—	15.6	17.6	20.6	22.6	25.1	28.2	30.2	32.7	37.7	44.2	48.2	52.2	59.2	61.2	66.7
						—	—	—	0.9	0.9	0.9	0.9	0.9	0.9	0.9	0.9	0.9	1.0	1.0	1.0	1.0	1.0	1.0
603	804	1213	7.50	11.00	1.44	12.3	14.3	16.9	22.4	24.4	27.4	29.4	31.9	34.9	36.9	39.4	44.4	50.9	54.9	58.9	65.9	67.9	73.4
			*			0.8	0.8	0.8	0.9	0.9	0.9	0.9	0.9	0.9	0.9	0.9	1.0	1.0	1.0	1.0	1.0	1.0	1.0
598	798	1203	9.50	14.00	1.45	—	—	—	18.4	20.4	23.4	25.4	27.9	30.9	32.9	35.4	40.5	47.0	51.0	55.0	62.0	64.0	69.5
						—	—	—	0.9	0.9	0.9	0.9	0.9	0.9	0.9	0.9	1.0	1.0	1.0	1.0	1.0	1.0	1.0
592	790	1191	6.00	9.00	1.47	15.1	17.1	19.6	25.1	27.1	30.2	32.2	34.7	37.7	39.7	42.2	47.2	53.7	57.7	61.7	68.7	70.7	76.2
			*			0.8	0.8	0.9	0.9	0.9	0.9	0.9	0.9	0.9	0.9	0.9	1.0	1.0	1.0	1.0	1.0	1.0	1.0
591	788	1188	7.00	10.50	1.47	13.1	15.1	17.6	23.2	25.2	28.2	30.2	32.7	35.7	37.7	40.2	45.2	51.7	55.7	59.7	66.7	68.7	74.2
			*			0.8	0.8	0.8	0.9	0.9	0.9	0.9	0.9	0.9	0.9	0.9	1.0	1.0	1.0	1.0	1.0	1.0	1.0

* Diameters below RMA minimum for other than Cog-Belt V-belts. Use with Super Blue Ribbon or Aramax V-belts will result in reduced life and loss of efficiency.

⚠ **WARNING** ** = Sheave Rim Speed over 6000 feet per minute - see Page 236

CLASSICAL SECTION PRE-ENGINEERED DRIVE SELECTION TABLES

C, CP, CK, CX PRE-ENGINEERED TABLES — RATIO 1.26 - 1.47

V-Belt Number and Center Distance (Other sizes may be available, see page 217)													Sheave Datum Diameters		Rated HP per Belt (Includes Added HP for Speed Ratio)								
															Super Blue Ribbon & Aramax (CP & CK) RPM of Small Sheave			Super II (C) RPM of Small Sheave			Gold Label Cog-Belt (CX) RPM of Small Sheave		
C 180	C 195	C 210	C 225	C 240	C 255	C 270	C 285	C 300	C 345	C 360	C 390	C 420	Small Sheave	Large Sheave	870 RPM	1160 RPM	1750 RPM	870 RPM	1160 RPM	1750 RPM	870 RPM	1160 RPM	1750 RPM
71.8	79.3	86.8	93.3	100.8	108.3	115.8	123.3	130.8	153.3	160.8	175.8	190.8	11.00	14.00	17.72	21.69	26.73	18.52	22.79	28.53	19.80	24.55	31.58
1.0	1.0	1.1	1.1	1.1	1.1	1.1	1.1	1.1	1.1	1.1	1.2	1.2											
78.9	86.4	93.9	100.4	107.9	115.4	122.9	130.4	137.9	160.4	167.9	182.9	197.9	7.00	9.00	8.67	10.62	13.48	10.11	12.54	16.40	12.08	15.14	20.37
1.0	1.0	1.1	1.1	1.1	1.1	1.1	1.1	1.1	1.1	1.1	1.2	1.2											
66.3	73.8	81.3	87.8	95.3	102.8	110.3	117.8	125.3	147.8	155.3	170.3	185.3	14.00	18.00	23.91	28.82	**	24.25	29.34	**	25.06	30.58	**
1.0	1.0	1.1	1.1	1.1	1.1	1.1	1.1	1.1	1.1	1.1	1.2	1.2											
76.1	83.6	91.1	97.6	105.1	112.6	120.1	127.6	135.1	157.6	165.1	180.1	195.1	8.50	11.00	12.19	14.99	19.04	13.39	16.60	21.51	15.09	18.87	25.07
1.0	1.0	1.1	1.1	1.1	1.1	1.1	1.1	1.1	1.1	1.1	1.2	1.2											
73.4	80.9	88.4	94.9	102.4	109.9	117.4	124.9	132.4	154.9	162.4	177.4	192.4	10.00	13.00	15.57	19.13	23.93	16.53	20.42	25.99	17.98	22.38	29.22
1.0	1.0	1.1	1.1	1.1	1.1	1.1	1.1	1.1	1.1	1.1	1.2	1.2											
76.9	84.4	91.9	98.4	105.9	113.4	120.9	128.4	135.9	158.4	165.9	180.9	195.9	8.00	10.50	11.05	13.59	17.31	12.34	15.30	19.92	14.13	17.68	23.61
1.0	1.0	1.1	1.1	1.1	1.1	1.1	1.1	1.1	1.1	1.1	1.2	1.2											
80.5	88.0	95.5	101.9	109.4	117.0	124.5	132.0	139.5	162.0	169.5	184.5	199.5	6.00	8.00	6.31	7.65	9.56	7.92	9.78	12.78	10.06	12.62	17.06
1.0	1.0	1.1	1.1	1.1	1.1	1.1	1.1	1.1	1.1	1.1	1.2	1.2											
77.7	85.2	92.7	99.2	106.7	114.2	121.7	129.2	136.7	159.2	166.7	181.7	196.7	7.50	10.00	9.91	12.17	15.50	11.27	13.98	18.26	13.15	16.47	22.09
1.0	1.0	1.1	1.1	1.1	1.1	1.1	1.1	1.1	1.1	1.1	1.2	1.2											
75.0	82.5	90.0	96.4	103.9	111.4	118.9	126.4	133.9	156.4	163.9	179.0	194.0	9.00	12.00	13.37	16.45	20.83	14.49	17.95	23.16	16.11	20.12	26.60
1.0	1.0	1.1	1.1	1.1	1.1	1.1	1.1	1.1	1.1	1.1	1.2	1.2											
72.2	79.7	87.2	93.7	101.2	108.7	116.2	123.7	131.2	153.7	161.2	176.2	191.2	10.50	14.00	16.70	20.49	25.47	17.59	21.69	27.40	18.95	23.54	30.54
1.0	1.0	1.1	1.1	1.1	1.1	1.1	1.1	1.1	1.1	1.1	1.2	1.2											
69.5	77.0	84.5	90.9	98.4	105.9	113.4	120.9	128.4	150.9	158.4	173.4	188.4	12.00	16.00	19.90	24.28	29.37	20.55	25.18	30.93	21.67	26.74	33.85
1.0	1.0	1.1	1.1	1.1	1.1	1.1	1.1	1.1	1.1	1.1	1.2	1.2											
78.5	86.0	93.5	100.0	107.5	115.0	122.5	130.0	137.5	160.0	167.5	182.5	197.5	7.00	9.50	8.74	10.72	13.63	10.19	12.64	16.55	12.15	15.24	20.52
1.0	1.0	1.1	1.1	1.1	1.1	1.1	1.1	1.1	1.1	1.1	1.2	1.2											
73.8	81.3	88.8	95.3	102.8	110.3	117.8	125.3	132.8	155.3	162.8	177.8	192.8	9.50	13.00	14.52	17.87	22.52	15.57	19.27	24.71	17.10	21.32	28.04
1.0	1.0	1.1	1.1	1.1	1.1	1.1	1.1	1.1	1.1	1.1	1.2	1.2											
76.5	84.0	91.5	98.0	105.5	113.0	120.5	128.0	135.5	158.0	165.5	180.5	195.5	8.00	11.00	11.11	13.67	17.42	12.39	15.38	20.04	14.19	17.76	23.73
1.0	1.0	1.1	1.1	1.1	1.1	1.1	1.1	1.1	1.1	1.1	1.2	1.2											
67.1	74.6	82.1	88.6	96.1	103.6	111.1	118.6	126.1	148.6	156.1	171.1	186.1	13.00	18.00	22.01	26.71	31.61	22.50	27.42	32.94	23.46	28.81	35.79
1.0	1.0	1.0	1.1	1.1	1.1	1.1	1.1	1.1	1.1	1.1	1.2	1.2											
77.3	84.8	92.3	98.8	106.3	113.8	121.3	128.8	136.3	158.8	166.3	181.3	196.3	7.50	10.50	9.96	12.24	15.62	11.33	14.06	18.38	13.20	16.55	22.21
1.0	1.0	1.1	1.1	1.1	1.1	1.1	1.1	1.1	1.1	1.1	1.2	1.2											
72.6	80.1	87.6	94.1	101.6	109.1	116.6	124.1	131.6	154.1	161.6	176.6	191.6	10.00	14.00	15.66	19.25	24.12	16.63	20.55	26.18	18.07	22.50	29.40
1.0	1.0	1.1	1.1	1.1	1.1	1.1	1.1	1.1	1.1	1.1	1.2	1.2											
75.4	82.9	90.4	96.8	104.3	111.8	119.3	126.8	134.3	156.8	164.3	179.3	194.3	8.50	12.00	12.29	15.14	19.26	13.50	16.74	21.73	15.20	19.01	25.29
1.0	1.0	1.1	1.1	1.1	1.1	1.1	1.1	1.1	1.1	1.1	1.2	1.2											
80.1	87.6	95.1	101.6	109.1	116.6	124.1	131.6	139.1	161.6	169.1	184.1	199.1	6.00	8.50	6.38	7.74	9.70	7.99	9.88	12.92	10.13	12.71	17.20
1.0	1.0	1.1	1.1	1.1	1.1	1.1	1.1	1.1	1.1	1.1	1.2	1.2											
78.1	85.6	93.1	99.6	107.1	114.6	122.1	129.6	137.1	159.6	167.1	182.1	197.1	7.00	10.00	8.80	10.79	13.74	10.24	12.71	16.66	12.21	15.31	20.63
1.0	1.0	1.1	1.1	1.1	1.1	1.1	1.1	1.1	1.1	1.1	1.2	1.2											
64.7	72.2	79.7	86.2	93.7	101.2	108.7	116.2	123.7	146.2	153.7	168.7	183.7	14.00	20.00	24.03	28.99	**	24.38	29.51	**	25.19	30.75	**
1.0	1.0	1.0	1.1	1.1	1.1	1.1	1.1	1.1	1.1	1.1	1.1	1.2											
74.2	81.7	89.2	95.7	103.2	110.7	118.2	125.7	133.2	155.7	163.2	178.2	193.2	9.00	13.00	13.46	16.57	21.00	14.58	18.07	23.33	16.20	20.23	26.77
1.0	1.0	1.1	1.1	1.1	1.1	1.1	1.1	1.1	1.1	1.1	1.2	1.2											
70.2	77.7	85.2	91.7	99.2	106.7	114.2	121.7	129.2	151.7	159.2	174.2	189.2	11.00	16.00	17.88	21.91	27.05	18.68	23.00	28.85	19.96	24.76	31.90
1.0	1.0	1.1	1.1	1.1	1.1	1.1	1.1	1.1	1.1	1.1	1.2	1.2											
76.9	84.4	91.9	98.4	105.9	113.4	120.9	128.4	135.9	158.4	165.9	180.9	195.9	7.50	11.00	10.01	12.30	15.71	11.37	14.12	18.47	13.25	16.61	22.30
1.0	1.0	1.1	1.1	1.1	1.1	1.1	1.1	1.1	1.1	1.1	1.2	1.2											
73.0	80.5	88.0	94.5	102.0	109.5	117.0	124.5	132.0	154.5	162.0	177.0	192.0	9.50	14.00	14.60	17.97	22.67	15.64	19.37	24.86	17.17	21.42	28.19
1.0	1.0	1.1	1.1	1.1	1.1	1.1	1.1	1.1	1.1	1.1	1.2	1.2											
79.7	87.2	94.7	101.2	108.7	116.2	123.7	131.2	138.7	161.2	168.7	183.7	198.7	6.00	9.00	6.43	7.81	9.81	8.04	9.94	13.02	10.18	12.78	17.30
1.0	1.0	1.1	1.1	1.1	1.1	1.1	1.1	1.1	1.1	1.1	1.2	1.2											
77.7	85.2	92.7	99.2	106.7	114.2	121.7	129.2	136.7	159.2	166.7	181.7	196.7	7.00	10.50	8.84	10.85	13.83	10.29	12.77	16.74	12.25	15.37	20.71
1.0	1.0	1.1	1.1	1.1	1.1	1.1	1.1	1.1	1.1	1.1	1.2	1.2											

* Diameters below RMA minimum for other than Cog-Belt V-belts. Use with Super Blue Ribbon or Aramax V-belts will result in reduced life and loss of efficiency.

⚠ **WARNING** ** = Sheave Rim Speed over 6000 feet per minute - see Page 236

CLASSICAL SECTION PRE-ENGINEERED DRIVE SELECTION TABLES

C, CP, CK, CX PRE-ENGINEERED TABLES RATIO 1.48 - 1.81

Driven Speed for Motor Speed of			Sheave Datum Diameters		V-Belt Number and Center Distance (other sizes may be available, see page 217)																			
870 RPM	1160 RPM	1750 RPM	Small Sheave	Large Sheave	Speed Ratio	C 51	C 55	C 60	C 71	C 75	C 81	C 85	C 90	C 96	C 100	C 105	C 115	C 128	C 136	C 144	C 158	C 162	C 173
589	786	1185	8.00	12.00	1.48	—	13.1	15.6	21.2	23.2	26.2	28.2	30.7	33.7	35.7	38.2	43.2	49.7	53.7	57.7	64.7	66.7	72.2
			*			—	0.8	0.8	0.9	0.9	0.9	0.9	0.9	0.9	0.9	0.9	1.0	1.0	1.0	1.0	1.0	1.0	1.0
586	782	1179	12.00	18.00	1.48	—	—	—	—	—	18.2	20.2	22.7	25.7	27.7	30.3	35.3	41.8	45.8	49.8	56.8	58.8	64.3
						—	—	—	—	—	0.9	0.9	0.9	0.9	0.9	0.9	0.9	1.0	1.0	1.0	1.0	1.0	1.0
585	780	1176	16.00	24.00	1.49	—	—	—	—	—	—	—	—	—	—	22.2	27.3	33.8	37.8	41.9	48.9	50.9	56.4
						—	—	—	—	—	—	—	—	—	—	0.9	0.9	1.0	1.0	1.0	1.0	1.0	1.0
578	771	1163	10.50	16.00	1.50	—	—	—	15.9	17.9	21.0	23.0	25.5	28.5	30.5	33.0	38.1	44.6	48.6	52.6	59.6	61.6	67.1
						—	—	—	0.8	0.9	0.9	0.9	0.9	0.9	0.9	0.9	0.9	1.0	1.0	1.0	1.0	1.0	1.0
578	770	1162	8.50	13.00	1.51	—	—	14.4	20.0	22.0	25.0	27.0	29.5	32.5	34.5	37.0	42.0	48.5	52.5	56.5	63.5	65.5	71.0
			*			—	—	0.8	0.9	0.9	0.9	0.9	0.9	0.9	0.9	0.9	1.0	1.0	1.0	1.0	1.0	1.0	1.0
571	762	1150	13.00	20.00	1.52	—	—	—	—	—	—	—	20.3	23.3	25.3	27.8	32.9	39.4	43.4	47.4	54.4	56.4	62.0
						—	—	—	—	—	—	—	0.9	0.9	0.9	0.9	0.9	1.0	1.0	1.0	1.0	1.0	1.0
568	757	1142	9.00	14.00	1.53	—	—	—	18.7	20.8	23.8	25.8	28.3	31.3	33.3	35.8	40.8	47.3	51.3	55.4	62.4	64.4	69.9
						—	—	—	0.9	0.9	0.9	0.9	0.9	0.9	0.9	0.9	0.9	1.0	1.0	1.0	1.0	1.0	1.0
565	753	1136	7.00	11.00	1.54	12.7	14.7	17.2	22.7	24.8	27.8	29.8	32.3	35.3	37.3	39.8	44.8	51.3	55.3	59.3	66.3	68.3	73.8
			*			0.8	0.8	0.8	0.9	0.9	0.9	0.9	0.9	0.9	0.9	0.9	1.0	1.0	1.0	1.0	1.0	1.0	1.0
562	750	1131	6.00	9.50	1.55	14.7	16.7	19.2	24.7	26.7	29.7	31.7	34.3	37.3	39.3	41.8	46.8	53.3	57.3	61.3	68.3	70.3	75.8
			*			0.8	0.8	0.8	0.9	0.9	0.9	0.9	0.9	0.9	0.9	0.9	1.0	1.0	1.0	1.0	1.0	1.0	1.0
554	739	1115	7.50	12.00	1.57	—	13.5	16.0	21.5	23.5	26.6	28.6	31.1	34.1	36.1	38.6	43.6	50.1	54.1	58.1	65.1	67.1	72.6
			*			—	0.8	0.8	0.9	0.9	0.9	0.9	0.9	0.9	0.9	0.9	1.0	1.0	1.0	1.0	1.0	1.0	1.0
552	736	1110	10.00	16.00	1.58	—	—	—	16.3	18.3	21.3	23.4	25.9	28.9	30.9	33.4	38.4	45.0	49.0	53.0	60.0	62.0	67.5
						—	—	—	0.8	0.9	0.9	0.9	0.9	0.9	0.9	0.9	0.9	1.0	1.0	1.0	1.0	1.0	1.0
545	727	1097	8.00	13.00	1.60	—	—	14.8	20.3	22.3	25.4	27.4	29.9	32.9	34.9	37.4	42.4	48.9	52.9	56.9	63.9	65.9	71.4
			*			—	—	0.8	0.9	0.9	0.9	0.9	0.9	0.9	0.9	0.9	1.0	1.0	1.0	1.0	1.0	1.0	1.0
539	719	1084	11.00	18.00	1.61	—	—	—	—	—	18.9	20.9	23.4	26.5	28.5	31.0	36.0	42.6	46.6	50.6	57.6	59.6	65.1
						—	—	—	—	—	0.9	0.9	0.9	0.9	0.9	0.9	0.9	1.0	1.0	1.0	1.0	1.0	1.0
538	717	1082	8.50	14.00	1.62	—	—	13.5	19.1	21.1	24.1	26.2	28.7	31.7	33.7	36.2	41.2	47.7	51.7	55.7	62.7	64.7	70.2
			*			—	—	0.8	0.9	0.9	0.9	0.9	0.9	0.9	0.9	0.9	0.9	1.0	1.0	1.0	1.0	1.0	1.0
535	714	1077	6.00	10.00	1.63	14.3	16.3	18.8	24.3	26.3	29.3	31.3	33.8	36.9	38.9	41.4	46.4	52.9	56.9	60.9	67.9	69.9	75.4
			*			0.8	0.8	0.8	0.9	0.9	0.9	0.9	0.9	0.9	0.9	0.9	1.0	1.0	1.0	1.0	1.0	1.0	1.0
529	705	1064	12.00	20.00	1.65	—	—	—	—	—	—	18.4	21.0	24.0	26.0	28.6	33.6	40.1	44.2	48.2	55.2	57.2	62.7
						—	—	—	—	—	—	0.9	0.9	0.9	0.9	0.9	0.9	1.0	1.0	1.0	1.0	1.0	1.0
525	700	1056	9.50	16.00	1.66	—	—	—	16.6	18.7	21.7	23.7	26.2	29.3	31.3	33.8	38.8	45.3	49.3	53.3	60.4	62.4	67.9
						—	—	—	0.8	0.9	0.9	0.9	0.9	0.9	0.9	0.9	0.9	1.0	1.0	1.0	1.0	1.0	1.0
521	694	1047	16.00	27.00	1.67	—	—	—	—	—	—	—	—	—	—	—	24.6	31.2	35.3	39.3	46.4	48.4	53.9
						—	—	—	—	—	—	—	—	—	—	—	0.9	0.9	0.9	1.0	1.0	1.0	1.0
519	692	1044	7.00	12.00	1.68	11.8	13.8	16.4	21.9	23.9	26.9	28.9	31.4	34.5	36.5	39.0	44.0	50.5	54.5	58.5	65.5	67.5	73.0
			*			0.8	0.8	0.8	0.9	0.9	0.9	0.9	0.9	0.9	0.9	0.9	1.0	1.0	1.0	1.0	1.0	1.0	1.0
515	687	1037	10.50	18.00	1.69	—	—	—	—	16.2	19.2	21.3	23.8	26.8	28.8	31.4	36.4	42.9	46.9	50.9	58.0	60.0	65.5
						—	—	—	—	0.8	0.9	0.9	0.9	0.9	0.9	0.9	0.9	1.0	1.0	1.0	1.0	1.0	1.0
513	685	1033	14.00	24.00	1.69	—	—	—	—	—	—	—	—	—	21.0	23.6	28.7	35.3	39.3	43.3	50.4	52.4	57.9
						—	—	—	—	—	—	—	—	—	0.9	0.9	0.9	0.9	1.0	1.0	1.0	1.0	1.0
513	684	1032	7.50	13.00	1.70	—	12.6	15.1	20.7	22.7	25.7	27.7	30.2	33.3	35.3	37.8	42.8	49.3	53.3	57.3	64.3	66.3	71.8
			*			—	0.8	0.8	0.9	0.9	0.9	0.9	0.9	0.9	0.9	0.9	0.9	1.0	1.0	1.0	1.0	1.0	1.0
511	681	1028	6.00	10.50	1.70	13.8	15.9	18.4	23.9	25.9	28.9	30.9	33.4	36.4	38.4	41.0	46.0	52.5	56.5	60.5	67.5	69.5	75.0
			*			0.8	0.8	0.8	0.9	0.9	0.9	0.9	0.9	0.9	0.9	0.9	1.0	1.0	1.0	1.0	1.0	1.0	1.0
508	677	1021	8.00	14.00	1.71	—	—	13.9	19.5	21.5	24.5	26.5	29.0	32.1	34.1	36.6	41.6	48.1	52.1	56.1	63.1	65.1	70.6
			*			—	—	0.8	0.9	0.9	0.9	0.9	0.9	0.9	0.9	0.9	0.9	1.0	1.0	1.0	1.0	1.0	1.0
499	665	1003	9.00	16.00	1.74	—	—	—	17.0	19.0	22.1	24.1	26.6	29.6	31.6	34.2	39.2	45.7	49.7	53.7	60.7	62.7	68.2
						—	—	—	0.8	0.9	0.9	0.9	0.9	0.9	0.9	0.9	0.9	1.0	1.0	1.0	1.0	1.0	1.0
492	656	989	10.00	18.00	1.77	—	—	—	—	16.5	19.6	21.6	24.1	27.2	29.2	31.7	36.8	43.3	47.3	51.3	58.3	60.3	65.9
						—	—	—	—	0.8	0.9	0.9	0.9	0.9	0.9	0.9	0.9	1.0	1.0	1.0	1.0	1.0	1.0
486	648	978	11.00	20.00	1.79	—	—	—	—	—	—	19.1	21.7	24.7	26.7	29.3	34.3	40.9	44.9	48.9	55.9	57.9	63.5
						—	—	—	—	—	—	0.9	0.9	0.9	0.9	0.9	0.9	1.0	1.0	1.0	1.0	1.0	1.0
488	651	982	6.00	11.00	1.78	13.4	15.4	17.9	23.5	25.5	28.5	30.5	33.0	36.0	38.0	40.5	45.6	52.1	56.1	60.1	67.1	69.1	74.6
			*			0.8	0.8	0.8	0.9	0.9	0.9	0.9	0.9	0.9	0.9	0.9	1.0	1.0	1.0	1.0	1.0	1.0	1.0
478	637	961	13.00	24.00	1.82	—	—	—	—	—	—	—	—	—	21.7	24.3	29.4	36.0	40.0	44.1	51.1	53.1	58.7
						—	—	—	—	—	—	—	—	—	0.9	0.9	0.9	0.9	1.0	1.0	1.0	1.0	1.0
480	641	966	7.00	13.00	1.81	—	12.9	15.5	21.0	23.1	26.1	28.1	30.6	33.6	35.6	38.1	43.2	49.7	53.7	57.7	64.7	66.7	72.2
			*			—	0.8	0.8	0.9	0.9	0.9	0.9	0.9	0.9	0.9	0.9	0.9	1.0	1.0	1.0	1.0	1.0	1.0

* Diameters below RMA minimum for other than Cog-Belt V-belts. Use with Super Blue Ribbon or Aramax V-belts will result in reduced life and loss of efficiency.

⚠ **WARNING** ** = Sheave Rim Speed over 6000 feet per minute - see Page 236

CLASSICAL SECTION PRE-ENGINEERED DRIVE SELECTION TABLES

C, CP, CK, CX PRE-ENGINEERED TABLES — RATIO 1.48 - 1.81

V-Belt Number and Center Distance (Other sizes may be available, see page 217)													Sheave Datum Diameters		Rated HP per Belt (Includes Added HP for Speed Ratio)								
															Super Blue Ribbon & Aramax (CP & CK) RPM of Small Sheave			Super II (C) RPM of Small Sheave			Gold Label Cog-Belt (CX) RPM of Small Sheave		
C 180	C 195	C 210	C 225	C 240	C 255	C 270	C 285	C 300	C 345	C 360	C 390	C 420	Small Sheave	Large Sheave	870 RPM	1160 RPM	1750 RPM	870 RPM	1160 RPM	1750 RPM	870 RPM	1160 RPM	1750 RPM
75.7	83.2	90.7	97.2	104.7	112.2	119.7	127.2	134.7	157.2	164.7	179.7	194.7	8.00	12.00	11.19	13.78	17.59	12.48	15.49	20.20	14.27	17.87	23.90
1.0	1.0	1.1	1.1	1.1	1.1	1.1	1.1	1.1	1.1	1.1	1.2	1.2											
67.8	75.4	82.9	89.3	96.8	104.3	111.8	119.4	126.9	149.4	156.9	171.9	186.9	12.00	18.00	20.02	24.43	29.61	20.67	25.33	31.17	21.79	26.90	34.09
1.0	1.0	1.0	1.1	1.1	1.1	1.1	1.1	1.1	1.1	1.1	1.1	1.2											
59.9	67.4	74.9	81.4	88.9	96.5	104.0	111.5	119.0	141.5	149.0	164.0	179.0	16.00	24.00	27.88	33.13	**	27.93	33.30	**	28.45	34.26	**
1.0	1.0	1.0	1.1	1.1	1.1	1.1	1.1	1.1	1.1	1.1	1.1	1.2											
70.6	78.1	85.6	92.1	99.6	107.1	114.6	122.1	129.6	152.1	15.6	174.6	189.6	10.50	16.00	16.83	20.67	25.74	17.72	21.86	27.66	19.08	23.72	30.80
1.0	1.0	1.0	1.1	1.1	1.1	1.1	1.1	1.1	1.1	1.1	1.1	1.2											
74.6	82.1	89.6	96.0	103.5	110.0	118.5	126.0	133.5	156.0	163.5	178.5	193.6	8.50	13.00	12.36	15.23	19.39	13.57	16.83	21.86	15.27	19.10	25.43
1.0	1.0	1.1	1.1	1.1	1.1	1.1	1.1	1.1	1.1	1.1	1.2	1.2											
65.5	73.0	80.5	87.0	94.5	102.0	109.5	117.0	124.5	147.0	154.5	169.5	184.5	13.00	20.00	22.10	26.83	31.80	22.60	27.54	33.13	23.55	28.93	35.97
1.0	1.0	1.0	1.1	1.1	1.1	1.1	1.1	1.1	1.1	1.1	1.1	1.2											
73.4	80.9	88.4	94.9	102.4	109.9	117.4	124.9	132.4	154.9	162.4	177.4	192.4	9.00	14.00	13.51	16.65	21.12	14.64	18.15	23.45	16.25	20.31	26.89
1.0	1.0	1.1	1.1	1.1	1.1	1.1	1.1	1.1	1.1	1.1	1.2	1.2											
77.3	84.8	92.3	98.8	106.3	113.8	121.3	128.8	136.3	158.8	166.3	181.3	196.3	7.00	11.00	8.87	10.89	13.90	10.32	12.81	16.81	12.28	15.41	20.78
1.0	1.0	1.1	1.1	1.1	1.1	1.1	1.1	1.1	1.1	1.1	1.2	1.2											
79.3	86.8	94.3	100.8	108.3	115.8	123.3	130.8	138.3	160.8	168.3	183.3	198.3	6.00	9.50	6.47	7.86	9.88	8.07	9.99	13.10	10.22	12.83	17.38
1.0	1.0	1.1	1.1	1.1	1.1	1.1	1.1	1.1	1.1	1.1	1.2	1.2											
76.1	83.6	91.1	97.6	105.1	112.6	120.1	127.6	135.1	157.6	165.1	180.1	195.1	7.50	12.00	10.07	12.39	15.83	11.43	14.20	18.59	13.31	16.69	22.42
1.0	1.0	1.1	1.1	1.1	1.1	1.1	1.1	1.1	1.1	1.1	1.2	1.2											
71.0	78.5	86.0	92.5	100.0	107.5	115.0	122.5	130.0	152.5	160.0	175.0	190.0	10.00	16.00	15.77	19.39	24.33	16.73	20.69	26.39	18.18	22.64	29.62
1.0	1.0	1.0	1.1	1.1	1.1	1.1	1.1	1.1	1.1	1.1	1.1	1.2											
74.9	82.4	89.9	96.4	103.9	111.4	118.9	126.4	133.9	156.4	163.9	178.9	193.9	8.00	13.00	11.25	13.85	17.69	12.53	15.56	20.31	14.32	17.94	24.00
1.0	1.0	1.1	1.1	1.1	1.1	1.1	1.1	1.1	1.1	1.1	1.2	1.2											
68.6	76.1	83.6	90.1	97.6	105.1	112.6	120.1	127.6	150.1	157.6	172.6	187.6	11.00	18.00	17.96	22.01	27.21	18.77	23.11	29.01	20.04	24.87	32.06
1.0	1.0	1.0	1.1	1.1	1.1	1.1	1.1	1.1	1.1	1.1	1.1	1.2											
73.7	81.3	88.8	95.2	102.7	110.2	117.7	125.2	132.8	155.3	162.8	177.8	192.8	8.50	14.00	12.41	15.29	19.48	13.61	16.89	21.95	15.31	19.16	25.52
1.0	1.0	1.0	1.1	1.1	1.1	1.1	1.1	1.1	1.1	1.1	1.1	1.2											
78.9	86.4	93.9	100.4	107.9	115.4	122.9	130.4	137.9	160.4	167.9	182.9	197.9	6.00	10.00	6.50	7.90	9.94	8.10	10.03	13.16	10.25	12.87	17.44
1.0	1.0	1.1	1.1	1.1	1.1	1.1	1.1	1.1	1.1	1.1	1.2	1.2											
66.2	73.7	81.2	87.7	95.2	102.7	110.2	117.7	125.3	147.8	155.3	170.3	185.3	12.00	20.00	20.08	24.52	29.74	20.74	25.42	31.30	21.85	26.99	34.22
1.0	1.0	1.0	1.1	1.1	1.1	1.1	1.1	1.1	1.1	1.1	1.1	1.2											
71.4	78.9	86.4	92.9	100.4	107.9	115.4	122.9	130.4	152.9	160.4	175.4	190.4	9.50	16.00	14.68	18.08	22.83	15.73	19.48	25.03	17.26	21.53	28.36
1.0	1.0	1.0	1.1	1.1	1.1	1.1	1.1	1.1	1.1	1.1	1.1	1.2											
57.4	65.0	72.5	79.0	86.5	94.0	101.5	109.0	116.5	139.1	146.6	161.6	176.6	16.00	27.00	27.95	33.22	**	28.00	33.39	**	28.52	34.36	**
1.0	1.0	1.0	1.0	1.1	1.1	1.1	1.1	1.1	1.1	1.1	1.1	1.2											
76.5	84.0	91.5	98.0	105.5	113.0	120.5	128.0	135.5	158.0	165.5	180.5	195.5	7.00	12.00	8.92	10.95	13.99	10.36	12.87	16.90	12.33	15.48	20.87
1.0	1.0	1.1	1.1	1.1	1.1	1.1	1.1	1.1	1.1	1.1	1.2	1.2											
69.0	76.5	84.0	90.5	98.0	105.5	113.0	120.5	128.0	150.5	158.0	173.0	188.0	10.50	18.00	16.90	20.75	25.87	17.78	21.95	27.80	19.15	23.80	30.93
1.0	1.0	1.0	1.1	1.1	1.1	1.1	1.1	1.1	1.1	1.1	1.1	1.2											
61.4	68.9	76.5	83.0	90.5	98.0	105.5	113.0	120.5	143.0	150.5	165.5	180.5	14.00	24.00	24.15	29.15	**	24.50	29.67	**	25.31	30.91	**
1.0	1.0	1.0	1.1	1.1	1.1	1.1	1.1	1.1	1.1	1.1	1.1	1.2											
75.3	82.8	90.3	96.8	104.3	111.8	119.3	126.8	134.3	156.8	164.3	179.3	194.3	7.50	13.00	10.11	12.44	15.91	11.47	14.25	18.67	13.35	16.74	22.50
1.0	1.0	1.0	1.1	1.1	1.1	1.1	1.1	1.1	1.1	1.1	1.1	1.2											
78.5	86.0	93.5	100.0	107.5	115.0	122.5	130.0	137.5	160.0	167.5	182.5	197.5	6.00	10.50	6.52	7.93	9.99	8.13	10.06	13.20	10.27	12.89	17.48
1.0	1.0	1.1	1.1	1.1	1.1	1.1	1.1	1.1	1.1	1.1	1.2	1.2											
74.1	81.6	89.1	95.6	103.1	110.6	118.1	125.6	133.1	155.6	163.1	178.1	193.1	8.00	14.00	11.28	13.90	17.76	12.56	15.61	20.38	14.35	17.99	24.07
1.0	1.0	1.0	1.1	1.1	1.1	1.1	1.1	1.1	1.1	1.1	1.1	1.2											
71.8	79.3	86.8	93.2	100.8	108.3	115.8	123.3	130.8	153.3	160.8	175.8	190.8	9.00	16.00	13.58	16.73	21.25	14.70	18.24	23.58	16.32	20.40	27.02
1.0	1.0	1.0	1.1	1.1	1.1	1.1	1.1	1.1	1.1	1.1	1.1	1.2											
69.4	76.9	84.4	90.9	98.4	105.9	113.4	120.9	128.4	150.9	158.4	173.4	188.4	10.00	18.00	15.82	19.46	24.44	16.79	20.76	26.50	18.23	22.71	29.72
1.0	1.0	1.0	1.1	1.1	1.1	1.1	1.1	1.1	1.1	1.1	1.1	1.2											
67.0	74.5	82.0	88.5	96.0	103.5	111.0	118.5	126.0	148.5	156.0	171.0	186.0	11.00	20.00	18.00	22.07	27.30	18.81	23.17	29.10	20.09	24.93	32.15
1.0	1.0	1.0	1.1	1.1	1.1	1.1	1.1	1.1	1.1	1.1	1.1	1.2											
78.1	85.6	93.1	99.6	107.1	114.6	122.1	129.6	137.1	159.6	167.1	182.1	197.1	6.00	11.00	6.54	7.95	10.02	8.14	10.08	13.24	10.29	12.92	17.52
1.0	1.0	1.1	1.1	1.1	1.1	1.1	1.1	1.1	1.1	1.1	1.2	1.2											
62.2	69.7	77.2	83.7	91.2	98.7	106.2	113.8	121.3	143.8	151.3	166.3	181.3	13.00	24.00	22.18	26.94	31.97	22.68	27.65	33.30	23.64	29.05	36.15
1.0	1.0	1.0	1.1	1.1	1.1	1.1	1.1	1.1	1.1	1.1	1.1	1.2											
75.7	83.2	90.7	97.2	104.7	112.2	119.7	127.2	134.7	157.2	164.7	179.7	194.7	7.00	13.00	8.95	10.99	14.05	10.40	12.91	16.96	12.36	15.52	20.93
1.0	1.0	1.0	1.1	1.1	1.1	1.1	1.1	1.1	1.1	1.1	1.1	1.2											

* Diameters below RMA minimum for other than Cog-Belt V-belts. Use with Super Blue Ribbon or Aramax V-belts will result in reduced life and loss of efficiency.

⚠ **WARNING** ** = Sheave Rim Speed over 6000 feet per minute - see Page 236

CLASSICAL SECTION PRE-ENGINEERED DRIVE SELECTION TABLES

C, CP, CK, CX PRE-ENGINEERED TABLES RATIO 1.82 - 2.25

Driven Speed for Motor Speed of			Sheave Datum Diameters		V-Belt Number and Center Distance (other sizes may be available, see page 217)																			
870 RPM	1160 RPM	1750 RPM	Small Sheave	Large Sheave	Speed Ratio	C 51	C 55	C 60	C 71	C 75	C 81	C 85	C 90	C 96	C 100	C 105	C 115	C 128	C 136	C 144	C 158	C 162	C 173
477	636	960	7.50	14.00	1.82	—	—	14.2	19.8	21.8	24.9	26.9	29.4	32.4	34.4	36.9	42.0	48.5	52.5	56.5	63.5	65.5	71.0
			*			—	—	0.8	0.9	0.9	0.9	0.9	0.9	0.9	0.9	0.9	0.9	1.0	1.0	1.0	1.0	1.0	1.0
469	626	944	16.00	30.00	1.85	—	—	—	—	—	—	—	—	—	—	—	—	28.5	32.6	36.7	43.8	45.8	51.4
						—	—	—	—	—	—	—	—	—	—	—	—	0.9	0.9	0.9	1.0	1.0	1.0
472	630	950	8.50	16.00	1.84	—	—	—	17.3	19.4	22.4	24.4	27.0	30.0	32.0	34.5	39.6	46.1	50.1	54.1	61.1	63.1	68.6
			*			—	—	—	0.8	0.9	0.9	0.9	0.9	0.9	0.9	0.9	0.9	1.0	1.0	1.0	1.0	1.0	1.0
468	624	942	9.50	18.00	1.86	—	—	—	—	16.8	19.9	22.0	24.5	27.5	29.6	32.1	37.1	43.7	47.7	51.7	58.7	60.7	66.2
						—	—	—	—	0.8	0.9	0.9	0.9	0.9	0.9	0.9	0.9	1.0	1.0	1.0	1.0	1.0	1.0
465	620	935	10.50	20.00	1.87	—	—	—	—	—	17.4	19.4	22.0	25.1	27.1	29.6	34.7	41.2	45.3	49.3	56.3	58.3	63.8
						—	—	—	—	—	0.8	0.9	0.9	0.9	0.9	0.9	0.9	1.0	1.0	1.0	1.0	1.0	1.0
457	610	920	14.00	27.00	1.90	—	—	—	—	—	—	—	—	—	—	—	26.0	32.6	36.7	40.8	47.8	49.8	55.4
						—	—	—	—	—	—	—	—	—	—	—	0.9	0.9	0.9	1.0	1.0	1.0	1.0
449	599	903	6.00	12.00	1.94	12.5	14.5	17.1	22.6	24.7	27.7	29.7	32.2	35.2	39.7	39.7	44.7	51.2	55.3	59.3	66.3	68.3	73.8
			*			0.8	0.8	0.8	0.9	0.9	0.9	0.9	0.9	0.9	0.9	0.9	0.9	1.0	1.0	1.0	1.0	1.0	1.0
447	596	899	7.00	14.00	1.95	—	—	14.6	20.2	22.2	25.2	27.3	29.8	32.8	34.8	37.3	42.3	48.9	52.9	56.9	63.9	65.9	71.4
			*			—	—	0.8	0.8	0.9	0.9	0.9	0.9	0.9	0.9	0.9	0.9	1.0	1.0	1.0	1.0	1.0	1.0
446	594	896	8.00	16.00	1.95	—	—	—	17.7	19.7	22.8	24.8	27.3	30.4	32.4	34.9	39.9	46.4	50.5	54.5	61.5	63.5	69.0
			*			—	—	—	0.8	0.8	0.9	0.9	0.9	0.9	0.9	0.9	0.9	1.0	1.0	1.0	1.0	1.0	1.0
444	593	894	9.00	18.00	1.96	—	—	—	—	17.2	20.3	22.3	24.9	27.9	29.9	32.5	37.5	44.0	48.1	52.1	59.1	61.1	66.6
						—	—	—	—	0.8	0.9	0.9	0.9	0.9	0.9	0.9	0.9	1.0	1.0	1.0	1.0	1.0	1.0
444	591	892	10.00	20.00	1.96	—	—	—	—	—	17.7	19.8	22.4	25.4	27.5	30.0	35.1	41.6	45.6	49.7	56.7	58.7	64.2
						—	—	—	—	—	0.8	0.9	0.9	0.9	0.9	0.9	0.9	0.9	1.0	1.0	1.0	1.0	1.0
442	590	889	12.00	24.00	1.97	—	—	—	—	—	—	—	—	20.3	22.4	25.0	30.1	36.7	40.8	44.8	51.9	53.9	59.4
						—	—	—	—	—	—	—	—	0.9	0.9	0.9	0.9	0.9	1.0	1.0	1.0	1.0	1.0
425	567	856	13.00	27.00	2.04	—	—	—	—	—	—	—	—	—	—	—	26.6	33.3	37.4	41.5	48.6	50.6	56.1
						—	—	—	—	—	—	—	—	—	—	—	0.9	0.9	0.9	1.0	1.0	1.0	1.0
422	563	849	9.50	20.00	2.06	—	—	—	—	—	18.0	20.1	22.7	25.8	27.8	30.3	35.4	42.0	46.0	50.0	57.1	59.1	64.6
						—	—	—	—	—	0.8	0.8	0.9	0.9	0.9	0.9	0.9	0.9	1.0	1.0	1.0	1.0	1.0
421	561	846	8.50	18.00	2.07	—	—	—	15.4	17.5	20.6	22.7	25.2	28.3	30.3	32.8	37.9	44.4	48.4	52.4	59.5	61.5	67.0
			*			—	—	—	0.8	0.8	0.9	0.9	0.9	0.9	0.9	0.9	0.9	1.0	1.0	1.0	1.0	1.0	1.0
419	559	843	7.50	16.00	2.08	—	—	—	18.0	20.1	23.1	25.2	27.7	30.7	32.7	35.3	40.3	46.8	50.8	54.9	61.9	63.9	69.4
			*			—	—	—	0.8	0.8	0.9	0.9	0.9	0.9	0.9	0.9	0.9	1.0	1.0	1.0	1.0	1.0	1.0
412	549	829	14.00	30.00	2.11	—	—	—	—	—	—	—	—	—	—	—	—	29.8	34.0	38.1	45.2	47.2	52.8
						—	—	—	—	—	—	—	—	—	—	—	—	0.9	0.9	0.9	1.0	1.0	1.0
416	554	836	6.00	13.00	2.09	11.5	13.6	16.2	21.8	23.8	26.8	28.8	31.4	34.4	36.4	38.9	43.9	50.4	54.4	58.4	65.5	67.5	73.0
			*			0.8	0.8	0.8	0.9	0.9	0.9	0.9	0.9	0.9	0.9	0.9	0.9	1.0	1.0	1.0	1.0	1.0	1.0
406	542	818	11.00	24.00	2.14	—	—	—	—	—	—	—	—	21.0	23.1	25.7	30.8	37.4	41.5	45.5	52.6	54.6	60.1
						—	—	—	—	—	—	—	—	0.8	0.9	0.9	0.9	0.9	0.9	1.0	1.0	1.0	1.0
401	535	806	9.00	20.00	2.17	—	—	—	—	—	18.4	20.5	23.0	26.1	28.2	30.7	35.8	42.3	46.4	50.4	47.4	59.4	65.0
						—	—	—	—	—	0.8	0.8	0.9	0.9	0.9	0.9	0.9	0.9	1.0	1.0	1.0	1.0	1.0
397	530	799	8.00	18.00	2.19	—	—	—	15.8	17.9	21.0	23.0	25.6	28.6	30.6	33.2	38.2	44.8	48.8	52.8	59.8	61.8	67.4
			*			—	—	—	0.8	0.8	0.8	0.9	0.9	0.9	0.9	0.9	0.9	1.0	1.0	1.0	1.0	1.0	1.0
394	525	792	12.00	27.00	2.21	—	—	—	—	—	—	—	—	—	—	22.1	27.3	34.0	38.1	42.2	49.3	51.3	56.8
						—	—	—	—	—	—	—	—	—	—	0.9	0.9	0.9	0.9	0.9	1.0	1.0	1.0
392	523	788	16.00	36.00	2.22	—	—	—	—	—	—	—	—	—	—	—	—	—	-0.0	31.0	38.3	40.0	46.0
						—	—	—	—	—	—	—	—	—	—	—	—	—	-0.0	0.9	0.9	0.9	1.0
393	523	790	7.00	16.00	2.22	—	—	—	18.4	20.4	23.5	25.5	28.0	31.1	33.1	35.6	40.7	47.2	51.2	55.2	62.2	64.2	69.8
			*			—	—	—	0.8	0.8	0.9	0.9	0.9	0.9	0.9	0.9	0.9	1.0	1.0	1.0	1.0	1.0	1.0
389	518	782	10.50	24.00	2.24	—	—	—	—	—	—	—	—	21.3	23.4	26.0	31.1	37.8	41.8	45.9	52.9	55.0	60.5
						—	—	—	—	—	—	—	—	0.8	0.9	0.9	0.9	0.9	0.9	1.0	1.0	1.0	1.0
383	511	771	13.00	30.00	2.27	—	—	—	—	—	—	—	—	—	—	—	23.7	30.5	34.7	38.8	45.9	47.9	53.5
						—	—	—	—	—	—	—	—	—	—	—	0.9	0.9	0.9	0.9	1.0	1.0	1.0
387	516	778	6.00	14.00	2.25	—	12.6	15.2	20.9	22.9	26.0	28.0	30.5	33.5	35.5	38.1	43.1	49.6	53.6	57.6	64.6	66.6	72.2
			*			—	0.8	0.8	0.8	0.9	0.9	0.9	0.9	0.9	0.9	0.9	0.9	1.0	1.0	1.0	1.0	1.0	1.0

* Diameters below RMA minimum for other than Cog-Belt V-belts. Use with Super Blue Ribbon or Aramax V-belts will result in reduced life and loss of efficiency.

⚠ **WARNING** ** = Sheave Rim Speed over 6000 feet per minute - see Page 236

CLASSICAL SECTION PRE-ENGINEERED DRIVE SELECTION TABLES

C, CP, CK, CX PRE-ENGINEERED TABLES — RATIO 1.82 - 2.25

V-Belt Number and Center Distance (Other sizes may be available, see page 217)													Sheave Datum Diameters		Rated HP per Belt (Includes Added HP for Speed Ratio)								
															Super Blue Ribbon & Aramax (CP & CK) RPM of Small Sheave			Super II (C) RPM of Small Sheave			Gold Label Cog-Belt (CX) RPM of Small Sheave		
C 180	C 195	C 210	C 225	C 240	C 255	C 270	C 285	C 300	C 345	C 360	C 390	C 420	Small Sheave	Large Sheave	870 RPM	1160 RPM	1750 RPM	870 RPM	1160 RPM	1750 RPM	870 RPM	1160 RPM	1750 RPM
74.5	82.0	89.5	96.0	103.5	111.0	118.5	126.0	133.5	156.0	163.5	178.5	193.5	7.50	14.00	10.14	12.47	15.97	11.50	14.29	18.73	13.38	16.78	22.56
1.0	1.0	1.0	1.1	1.1	1.1	1.1	1.1	1.1	1.1	1.1	1.1	1.2											
54.9	62.5	70.0	76.5	84.0	91.6	99.1	106.6	114.1	136.6	144.2	159.2	174.2	16.00	30.00	27.98	33.27	**	28.03	33.44	**	28.56	34.41	**
1.0	1.0	1.0	1.0	1.1	1.1	1.1	1.1	1.1	1.1	1.1	1.1	1.2											
72.1	79.6	87.1	93.6	101.1	108.6	116.1	123.7	131.2	153.7	161.2	176.2	191.2	8.50	16.00	12.46	15.36	19.59	13.66	16.96	22.06	15.37	19.23	25.62
1.0	1.0	1.0	1.1	1.1	1.1	1.1	1.1	1.1	1.1	1.1	1.1	1.2											
69.7	77.3	84.8	91.3	98.8	106.3	113.8	121.3	128.8	151.3	158.8	173.8	188.8	9.50	18.00	14.73	18.14	22.92	15.77	19.54	25.11	17.30	21.59	28.44
1.0	1.0	1.0	1.1	1.1	1.1	1.1	1.1	1.1	1.1	1.1	1.1	1.2											
67.3	74.9	82.4	88.9	96.4	103.9	111.4	118.9	126.4	148.9	156.4	171.4	186.4	10.50	20.00	16.93	20.80	25.94	17.82	22.00	27.87	19.18	23.85	31.01
1.0	1.0	1.0	1.1	1.1	1.1	1.1	1.1	1.1	1.1	1.1	1.1	1.2											
58.9	66.5	74.0	80.5	88.0	95.5	103.0	110.6	118.1	140.6	148.1	163.1	178.1	14.00	27.00	24.19	29.20	**	24.54	29.73	**	25.35	30.96	**
1.0	1.0	1.0	1.1	1.1	1.1	1.1	1.1	1.1	1.1	1.1	1.1	1.2											
77.3	84.8	92.3	98.8	106.3	113.8	121.3	128.8	136.3	158.8	166.3	181.3	196.3	6.00	12.00	6.56	7.99	10.07	8.17	10.12	13.29	10.31	12.95	17.57
1.0	1.0	1.0	1.1	1.1	1.1	1.1	1.1	1.1	1.1	1.1	1.1	1.2											
74.9	82.4	89.9	96.4	103.9	111.4	118.9	126.4	133.9	156.4	163.9	178.9	193.9	7.00	14.00	8.97	11.02	14.09	10.42	12.94	17.00	12.38	15.54	20.97
1.0	1.0	1.0	1.1	1.1	1.1	1.1	1.1	1.1	1.1	1.1	1.1	1.2											
72.5	80.0	87.5	94.0	101.5	109.0	116.5	124.0	131.5	154.0	161.6	176.6	191.6	8.00	16.00	11.32	13.95	17.85	12.61	15.66	20.46	14.40	18.04	24.15
1.0	1.0	1.0	1.1	1.1	1.1	1.1	1.1	1.1	1.1	1.1	1.1	1.2											
70.1	77.6	85.1	91.6	99.1	106.6	114.2	121.7	129.2	151.7	159.2	174.2	189.2	9.00	18.00	13.61	16.78	21.32	14.74	18.28	23.65	16.36	20.44	27.10
1.0	1.0	1.0	1.1	1.1	1.1	1.1	1.1	1.1	1.1	1.1	1.1	1.2											
67.7	75.2	82.8	89.2	96.8	104.3	111.8	119.3	126.8	149.3	156.8	171.8	186.8	10.00	20.00	15.85	19.50	24.50	16.82	20.80	26.56	18.26	22.75	29.79
1.0	1.0	1.0	1.1	1.1	1.1	1.1	1.1	1.1	1.1	1.1	1.1	1.2											
62.9	70.4	78.0	84.5	92.0	99.5	107.0	114.5	122.0	144.6	152.1	167.1	182.1	12.00	24.00	20.15	24.60	29.87	20.80	25.50	31.42	21.92	27.07	34.35
1.0	1.0	1.0	1.0	1.1	1.1	1.1	1.1	1.1	1.1	1.1	1.1	1.2											
59.6	67.2	74.7	81.2	88.8	96.3	103.8	111.3	118.8	141.4	148.9	163.9	178.9	13.00	27.00	22.21	26.98	32.03	22.71	27.69	33.36	23.67	29.09	36.21
1.0	1.0	1.0	1.0	1.1	1.1	1.1	1.1	1.1	1.1	1.1	1.1	1.2											
68.1	75.6	83.1	89.6	97.1	104.6	112.2	119.7	127.2	149.7	157.2	172.2	187.2	9.50	20.00	14.75	18.17	22.97	15.80	19.57	25.17	17.33	21.63	28.50
1.0	1.0	1.0	1.1	1.1	1.1	1.1	1.1	1.1	1.1	1.1	1.1	1.2											
70.5	78.0	85.5	92.0	99.5	107.0	114.5	122.0	129.5	152.1	159.6	174.6	189.6	8.50	18.00	12.49	15.40	19.65	13.69	17.00	22.12	15.39	19.27	25.68
1.0	1.0	1.0	1.1	1.1	1.1	1.1	1.1	1.1	1.1	1.1	1.1	1.2											
72.9	80.4	87.9	94.4	101.9	109.4	116.9	124.4	131.9	154.4	161.9	176.9	191.9	7.50	16.00	10.17	12.52	16.03	11.53	14.33	18.79	13.41	16.82	22.62
1.0	1.0	1.0	1.1	1.1	1.1	1.1	1.1	1.1	1.1	1.1	1.1	1.2											
56.3	63.9	71.5	78.0	85.5	93.0	100.6	108.1	115.6	138.2	145.7	160.7	175.7	14.00	30.00	24.22	29.24	**	24.56	29.76	**	25.37	30.99	**
1.0	1.0	1.0	1.0	1.1	1.1	1.1	1.1	1.1	1.1	1.1	1.1	1.2											
76.5	84.0	91.5	98.0	105.5	113.0	120.5	128.0	135.5	158.0	165.5	180.5	195.5	6.00	13.00	6.58	8.01	10.10	8.18	10.14	13.32	10.33	12.97	17.60
1.0	1.0	1.0	1.1	1.1	1.1	1.1	1.1	1.1	1.1	1.1	1.1	1.2											
63.7	71.2	78.7	85.2	92.7	100.3	107.8	115.3	122.8	145.3	152.8	167.8	182.8	11.00	24.00	18.05	22.13	27.39	18.85	23.23	29.19	20.13	24.99	32.24
1.0	1.0	1.0	1.0	1.1	1.1	1.1	1.1	1.1	1.1	1.1	1.1	1.2											
68.5	76.0	83.5	90.0	97.5	105.0	112.5	120.0	127.6	150.1	157.6	172.6	187.6	9.00	20.00	13.64	16.81	21.37	14.76	18.31	23.70	16.38	20.47	27.14
1.0	1.0	1.0	1.1	1.1	1.1	1.1	1.1	1.1	1.1	1.1	1.1	1.2											
70.9	78.4	85.9	92.4	99.9	107.4	114.9	122.4	129.9	152.4	160.0	175.0	190.0	8.00	18.00	11.34	13.98	17.89	12.63	15.69	20.51	14.42	18.07	24.20
1.0	1.0	1.0	1.1	1.1	1.1	1.1	1.1	1.1	1.1	1.1	1.1	1.2											
60.4	67.9	75.5	82.0	89.5	97.0	104.6	112.1	119.6	142.1	149.6	164.6	179.7	12.00	27.00	20.17	24.63	29.91	20.82	25.53	31.47	21.94	27.10	34.39
1.0	1.0	1.0	1.0	1.1	1.1	1.1	1.1	1.1	1.1	1.1	1.1	1.2											
49.6	57.3	64.9	71.4	79.0	86.5	94.1	101.6	109.2	131.7	139.3	154.3	169.3	16.00	36.00	28.02	33.33	**	28.07	33.49	**	28.59	34.46	**
1.0	1.0	1.0	1.0	1.0	1.1	1.1	1.1	1.1	1.1	1.1	1.1	1.1											
73.3	80.8	88.3	94.8	102.3	109.8	117.3	124.8	132.3	154.8	162.3	177.3	192.3	7.00	16.00	9.00	11.05	14.14	10.44	12.97	17.05	12.41	15.58	21.03
1.0	1.0	1.0	1.1	1.1	1.1	1.1	1.1	1.1	1.1	1.1	1.1	1.2											
64.0	71.6	79.1	85.6	93.1	100.6	108.1	115.7	123.2	145.7	153.2	168.2	183.2	10.50	24.00	16.97	20.85	26.02	17.86	22.05	27.95	19.22	23.90	31.08
1.0	1.0	1.0	1.0	1.1	1.1	1.1	1.1	1.1	1.1	1.1	1.1	1.2											
57.1	64.6	72.2	78.7	86.3	93.8	101.3	108.8	116.4	138.9	146.4	161.5	176.5	13.00	30.00	22.23	27.01	32.07	22.73	27.72	33.40	23.69	29.11	36.24
1.0	1.0	1.0	1.0	1.1	1.1	1.1	1.1	1.1	1.1	1.1	1.1	1.2											
75.7	83.2	90.7	97.2	104.7	112.2	119.7	127.2	134.7	157.2	164.7	179.7	194.7	6.00	14.00	6.59	8.02	10.13	8.20	10.16	13.35	10.34	12.99	17.62
1.0	1.0	1.0	1.1	1.1	1.1	1.1	1.1	1.1	1.1	1.1	1.1	1.2											

* Diameters below RMA minimum for other than Cog-Belt V-belts. Use with Super Blue Ribbon or Aramax V-belts will result in reduced life and loss of efficiency.

⚠ **WARNING** ** = Sheave Rim Speed over 6000 feet per minute - see Page 236

CLASSICAL SECTION PRE-ENGINEERED DRIVE SELECTION TABLES

C, CP, CK, CX PRE-ENGINEERED TABLES RATIO 2.29 - 3.09

Driven Speed for Motor Speed of			Sheave Datum Diameters		V-Belt Number and Center Distance (other sizes may be available, see page 217)																			
870 RPM	1160 RPM	1750 RPM	Small Sheave	Large Sheave	Speed Ratio	C 51	C 55	C 60	C 71	C 75	C 81	C 85	C 90	C 96	C 100	C 105	C 115	C 128	C 136	C 144	C 158	C 162	C 173
3.80	5.06	763	8.50	20.00	2.29	—	—	—	—	—	18.7	20.8	23.4	26.5	28.5	31.1	36.1	42.7	46.7	50.8	57.8	59.8	65.3
			*			—	—	—	—	—	0.8	0.8	0.9	0.9	0.9	0.9	0.9	0.9	1.0	1.0	1.0	1.0	1.0
374	498	751	7.50	18.00	2.33	—	—	—	16.1	18.2	21.3	23.4	25.9	29.0	31.0	33.5	38.6	45.1	49.2	53.2	60.2	62.2	67.7
			*			—	—	—	0.8	0.8	0.8	0.9	0.9	0.9	0.9	0.9	0.9	1.0	1.0	1.0	1.0	1.0	1.0
371	494	746	10.00	24.00	2.35	—	—	—	—	—	—	—	—	21.6	23.7	26.3	31.5	38.1	42.2	46.2	53.3	55.3	60.9
						—	—	—	—	—	—	—	—	0.8	0.9	0.9	0.9	0.9	0.9	1.0	1.0	1.0	1.0
362	483	728	11.00	27.00	2.40	—	—	—	—	—	—	—	—	—	—	22.7	28.0	34.7	38.8	42.9	50.0	52.0	57.6
						—	—	—	—	—	—	—	—	—	—	0.8	0.9	0.9	0.9	0.9	1.0	1.0	1.0
358	478	721	8.00	20.00	2.43	—	—	—	—	—	19.0	21.1	23.7	26.8	28.9	31.4	36.5	43.1	47.1	51.1	58.2	60.2	65.7
			*			—	—	—	—	—	0.8	0.8	0.9	0.9	0.9	0.9	0.9	0.9	1.0	1.0	1.0	1.0	1.0
355	473	714	12.00	30.00	2.45	—	—	—	—	—	—	—	—	—	—	—	24.3	31.2	35.3	39.5	46.6	48.7	54.2
						—	—	—	—	—	—	—	—	—	—	—	0.9	0.9	0.9	0.9	1.0	1.0	1.0
353	471	710	9.50	24.00	2.46	—	—	—	—	—	—	—	18.8	22.0	24.1	26.7	31.8	38.5	42.5	46.6	53.7	55.7	61.2
						—	—	—	—	—	—	—	0.8	0.8	0.9	0.9	0.9	0.9	0.9	1.0	1.0	1.0	1.0
350	467	704	7.00	18.00	2.49	—	—	—	16.4	18.5	21.6	23.7	26.3	29.3	31.4	33.9	38.9	45.5	49.5	53.6	60.6	62.6	68.1
						—	—	—	0.8	0.8	0.8	0.9	0.9	0.9	0.9	0.9	0.9	0.9	1.0	1.0	1.0	1.0	1.0
346	461	696	10.50	27.00	2.51	—	—	—	—	—	—	—	—	—	—	23.0	28.3	35.0	39.1	43.2	50.3	52.4	57.9
						—	—	—	—	—	—	—	—	—	—	0.8	0.9	0.9	0.9	0.9	1.0	1.0	1.0
344	459	692	14.00	36.00	2.53	—	—	—	—	—	—	—	—	—	—	—	—	—	28.0	32.3	39.7	41.8	47.4
						—	—	—	—	—	—	—	—	—	—	—	—	—	0.9	0.9	0.9	0.9	1.0
340	453	683	6.00	16.00	2.56	—	—	13.2	19.0	21.1	24.2	26.2	28.8	31.8	33.8	36.3	41.4	47.9	52.0	56.0	63.0	65.0	70.5
			*			—	—	0.8	0.8	0.8	0.9	0.9	0.9	0.9	0.9	0.9	0.9	1.0	1.0	1.0	1.0	1.0	1.0
337	449	678	7.50	20.00	2.58	—	—	—	—	16.2	19.4	21.5	24.1	27.2	29.2	31.8	36.8	43.4	47.5	51.5	58.5	60.6	66.1
			*			—	—	—	—	0.8	0.8	0.8	0.9	0.9	0.9	0.9	0.9	0.9	1.0	1.0	1.0	1.0	1.0
335	447	674	9.00	24.00	2.60	—	—	—	—	—	—	—	19.1	22.3	24.4	27.0	32.2	38.8	42.9	47.0	54.0	56.1	61.6
						—	—	—	—	—	—	—	0.8	0.8	0.9	0.9	0.9	0.9	0.9	1.0	1.0	1.0	1.0
330	440	664	10.00	27.00	2.63	—	—	—	—	—	—	—	—	—	20.7	23.4	28.7	35.4	39.5	43.6	50.7	52.7	58.3
						—	—	—	—	—	—	—	—	—	0.8	0.8	0.9	0.9	0.9	0.9	1.0	1.0	1.0
326	435	656	11.00	30.00	2.67	—	—	—	—	—	—	—	—	—	—	—	25.0	31.9	36.0	40.1	47.3	49.4	54.9
						—	—	—	—	—	—	—	—	—	—	—	0.8	0.9	0.9	0.9	1.0	1.0	1.0
321	428	646	16.00	44.00	2.71	—	—	—	—	—	—	—	—	—	—	—	—	—	—	—	—	32.3	38.3
						—	—	—	—	—	—	—	—	—	—	—	—	—	—	—	—	0.9	0.9
320	427	644	13.00	36.00	2.72	—	—	—	—	—	—	—	—	—	—	—	—	—	28.7	33.0	40.3	42.4	48.1
						—	—	—	—	—	—	—	—	—	—	—	—	—	0.9	0.9	0.9	0.9	1.0
317	423	638	8.50	24.00	2.74	—	—	—	—	—	—	—	19.4	22.6	24.7	27.3	32.5	39.2	43.3	47.3	54.4	56.4	62.0
			*			—	—	—	—	—	—	—	0.8	0.8	0.9	0.9	0.9	0.9	0.9	1.0	1.0	1.0	1.0
314	419	632	9.50	27.00	2.77	—	—	—	—	—	—	—	—	—	21.0	23.7	29.0	35.7	39.8	43.9	51.1	53.1	58.7
						—	—	—	—	—	—	—	—	—	0.8	0.8	0.9	0.9	0.9	0.9	1.0	1.0	1.0
316	421	635	7.00	20.00	2.76	—	—	—	—	16.5	19.7	21.8	24.4	27.5	29.6	32.1	37.2	43.8	47.8	51.9	58.9	60.9	66.4
			*			—	—	—	—	0.8	0.8	0.8	0.9	0.9	0.9	0.9	0.9	0.9	1.0	1.0	1.0	1.0	1.0
312	416	627	10.50	30.00	2.79	—	—	—	—	—	—	—	—	—	—	—	25.3	32.2	36.4	40.5	47.7	49.7	55.3
						—	—	—	—	—	—	—	—	—	—	—	0.8	0.9	0.9	0.9	1.0	1.0	1.0
303	403	609	6.00	18.00	2.88	—	—	—	17.1	19.2	22.3	24.4	27.0	30.0	32.1	34.6	39.7	46.2	50.3	54.3	61.3	63.3	68.9
			*			—	—	—	0.8	0.8	0.8	0.9	0.9	0.9	0.9	0.9	0.9	0.9	1.0	1.0	1.0	1.0	1.0
300	399	602	8.00	24.00	2.90	—	—	—	—	—	—	—	19.7	22.9	25.1	27.7	32.9	39.5	43.6	47.7	54.8	56.8	62.3
			*			—	—	—	—	—	—	—	0.8	0.8	0.9	0.9	0.9	0.9	0.9	1.0	1.0	1.0	1.0
298	398	600	9.00	27.00	2.91	—	—	—	—	—	—	—	—	—	21.3	24.0	29.3	36.1	40.2	44.3	51.4	53.4	59.0
						—	—	—	—	—	—	—	—	—	0.8	0.8	0.9	0.9	0.9	0.9	1.0	1.0	1.0
298	397	599	10.00	30.00	2.92	—	—	—	—	—	—	—	—	—	—	—	25.6	32.5	36.7	40.8	48.0	50.1	55.7
						—	—	—	—	—	—	—	—	—	—	—	0.8	0.9	0.9	0.9	1.0	1.0	1.0
296	395	596	12.00	36.00	2.94	—	—	—	—	—	—	—	—	—	—	—	—	—	29.3	33.6	41.0	43.1	48.8
						—	—	—	—	—	—	—	—	—	—	—	—	—	0.9	0.9	0.9	0.9	1.0
283	377	569	16.00	50.00	3.07	—	—	—	—	—	—	—	—	—	—	—	—	—	—	—	—	—	—
						—	—	—	—	—	—	—	—	—	—	—	—	—	—	—	—	—	—
282	376	568	14.00	44.00	3.08	—	—	—	—	—	—	—	—	—	—	—	—	—	—	—	31.3	33.6	39.6
						—	—	—	—	—	—	—	—	—	—	—	—	—	—	—	0.8	0.9	0.9
283	378	570	9.50	30.00	3.07	—	—	—	—	—	—	—	—	—	—	—	25.9	32.8	37.0	41.2	48.4	50.4	56.0
						—	—	—	—	—	—	—	—	—	—	—	0.8	0.9	0.9	0.9	1.0	1.0	1.0
283	377	568	8.50	27.00	3.08	—	—	—	—	—	—	—	—	—	21.6	24.3	29.6	36.4	40.5	44.6	51.8	53.8	59.4
			*			—	—	—	—	—	—	—	—	—	0.8	0.8	0.9	0.9	0.9	0.9	1.0	1.0	1.0
282	376	567	7.50	24.00	3.09	—	—	—	—	—	—	—	20.0	23.3	25.4	28.0	33.2	39.9	44.0	48.0	55.1	57.1	62.7
			*			—	—	—	—	—	—	—	0.8	0.8	0.8	0.9	0.9	0.9	0.9	1.0	1.0	1.0	1.0

* Diameters below RMA minimum for other than Cog-Belt V-belts. Use with Super Blue Ribbon or Aramax V-belts will result in reduced life and loss of efficiency.

⚠ **WARNING** ** = Sheave Rim Speed over 6000 feet per minute - see Page 236

CLASSICAL SECTION PRE-ENGINEERED DRIVE SELECTION TABLES

C, CP, CK, CX PRE-ENGINEERED TABLES — RATIO 2.29 - 3.09

V-Belt Number and Center Distance (Other sizes may be available, see page 217)													Sheave Datum Diameters		Rated HP per Belt (Includes Added HP for Speed Ratio)								
															Super Blue Ribbon & Aramax (CP & CK) RPM of Small Sheave			Super II (C) RPM of Small Sheave			Gold Label Cog-Belt (CX) RPM of Small Sheave		
C 180	C 195	C 210	C 225	C 240	C 255	C 270	C 285	C 300	C 345	C 360	C 390	C 420	Small Sheave	Large Sheave	870 RPM	1160 RPM	1750 RPM	870 RPM	1160 RPM	1750 RPM	870 RPM	1160 RPM	1750 RPM
68.8	76.4	83.9	90.4	97.9	105.4	112.9	120.4	127.9	150.5	158.0	173.0	188.0	8.50	20.00	12.50	15.42	19.68	13.71	17.02	22.15	15.41	19.29	25.71
1.0	1.0	1.0	1.1	1.1	1.1	1.1	1.1	1.1	1.1	1.1	1.1	1.2											
71.3	78.8	86.3	92.8	100.3	107.8	115.3	122.8	130.3	152.8	160.3	175.3	190.3	7.50	18.00	10.19	12.54	16.07	11.55	14.36	18.83	13.43	16.85	22.66
1.0	1.0	1.0	1.1	1.1	1.1	1.1	1.1	1.1	1.1	1.1	1.1	1.2											
64.4	71.9	79.5	86.0	93.5	101.0	108.5	116.0	123.5	146.1	153.6	168.6	183.6	10.00	24.00	15.88	19.54	24.56	16.85	20.84	26.62	18.29	22.79	29.85
1.0	1.0	1.0	1.0	1.1	1.1	1.1	1.1	1.1	1.1	1.1	1.1	1.2											
61.1	68.7	76.2	82.7	90.3	97.8	105.3	112.8	120.3	142.9	150.4	165.4	180.4	11.00	27.00	18.06	22.16	27.42	18.87	23.25	29.22	20.15	25.01	32.28
1.0	1.0	1.0	1.0	1.1	1.1	1.1	1.1	1.1	1.1	1.1	1.1	1.2											
69.2	76.7	84.3	90.8	98.3	105.8	113.3	120.8	128.3	150.8	158.3	173.4	188.4	8.00	20.00	11.36	14.00	17.92	12.64	15.71	20.54	14.43	18.09	24.23
1.0	1.0	1.0	1.1	1.1	1.1	1.1	1.1	1.1	1.1	1.1	1.1	1.2											
57.8	65.4	72.9	79.5	87.0	94.5	102.1	109.6	117.1	139.7	147.2	162.2	177.2	12.00	30.00	20.18	24.65	29.94	20.84	25.55	31.50	21.95	27.12	34.42
1.0	1.0	1.0	1.0	1.1	1.1	1.1	1.1	1.1	1.1	1.1	1.1	1.2											
64.8	72.3	79.8	86.3	93.9	101.4	108.9	116.4	123.9	146.5	154.0	169.0	184.0	9.50	24.00	14.78	18.20	23.03	15.82	19.60	25.22	17.35	21.66	28.55
1.0	1.0	1.0	1.0	1.1	1.1	1.1	1.1	1.1	1.1	1.1	1.1	1.2											
71.6	79.1	86.7	93.2	100.7	108.2	115.7	123.2	130.7	153.2	160.7	175.7	190.7	7.00	18.00	9.01	11.07	14.17	10.46	12.99	17.08	12.42	15.60	21.05
1.0	1.0	1.0	1.1	1.1	1.1	1.1	1.1	1.1	1.1	1.1	1.1	1.2											
61.5	69.0	76.6	83.1	90.6	98.2	105.7	113.2	120.7	143.3	150.8	165.8	180.8	10.50	27.00	16.99	20.87	26.05	17.87	22.07	27.97	19.23	23.92	31.11
1.0	1.0	1.0	1.0	1.1	1.1	1.1	1.1	1.1	1.1	1.1	1.1	1.2											
51.0	58.7	66.3	72.8	80.4	88.0	95.5	103.1	110.6	133.2	140.8	155.8	170.8	14.00	36.00	24.24	29.27	**	24.59	29.79	**	25.39	31.03	**
1.0	1.0	1.0	1.0	1.0	1.1	1.1	1.1	1.1	1.1	1.1	1.1	1.1											
74.0	81.5	89.1	95.5	103.0	110.6	118.1	125.6	133.1	155.6	163.1	178.1	193.1	6.00	16.00	6.61	8.04	10.16	8.21	10.18	13.38	10.35	13.01	17.65
1.0	1.0	1.0	1.1	1.1	1.1	1.1	1.1	1.1	1.1	1.1	1.1	1.2											
69.6	77.1	84.6	91.1	98.7	106.2	113.7	121.2	128.7	151.2	158.7	173.7	188.7	7.50	20.00	10.20	12.56	16.09	11.56	14.37	18.85	13.44	16.86	22.68
1.0	1.0	1.0	1.0	1.1	1.1	1.1	1.1	1.1	1.1	1.1	1.1	1.2											
65.1	72.7	80.2	86.7	94.2	101.8	109.3	116.8	124.3	146.8	154.3	169.4	184.4	9.00	24.00	13.66	16.84	21.41	14.78	18.34	23.74	16.40	20.50	27.18
1.0	1.0	1.0	1.0	1.1	1.1	1.1	1.1	1.1	1.1	1.1	1.1	1.2											
61.8	69.4	76.9	83.5	91.0	98.5	106.0	113.6	121.1	143.6	151.2	166.2	181.2	10.00	27.00	15.89	19.56	24.59	16.86	20.86	26.64	18.31	22.81	29.87
1.0	1.0	1.0	1.0	1.1	1.1	1.1	1.1	1.1	1.1	1.1	1.1	1.2											
58.5	66.1	73.7	80.2	87.7	95.3	102.8	110.3	117.9	140.4	147.9	163.0	178.0	11.00	30.00	18.07	22.17	27.44	18.88	23.27	29.24	20.16	25.02	32.30
1.0	1.0	1.0	1.0	1.0	1.1	1.1	1.1	1.1	1.1	1.1	1.1	1.1											
42.0	49.9	57.6	64.3	72.0	79.6	87.2	94.8	102.4	125.0	132.6	147.7	162.7	16.00	44.00	28.05	33.36	**	28.10	33.52	**	28.62	34.49	**
0.9	1.0	1.0	1.0	1.0	1.0	1.0	1.1	1.1	1.1	1.1	1.1	1.1											
51.7	59.4	67.0	73.6	81.2	88.7	96.3	103.8	111.4	134.0	141.5	156.5	171.6	13.00	36.00	22.25	27.03	32.10	22.75	27.74	33.44	23.71	29.14	36.28
1.0	1.0	1.0	1.0	1.0	1.0	1.1	1.1	1.1	1.1	1.1	1.1	1.1											
65.5	73.0	80.6	87.1	94.6	102.1	109.7	117.2	124.7	147.2	154.7	169.7	184.8	8.50	24.00	12.52	15.44	19.72	13.73	17.05	22.19	15.43	19.32	25.75
1.0	1.0	1.0	1.0	1.1	1.1	1.1	1.1	1.1	1.1	1.1	1.1	1.2											
62.2	69.8	77.3	83.8	91.4	98.9	106.4	113.9	121.5	144.0	151.5	166.6	181.6	9.50	27.00	14.79	18.22	23.05	15.83	19.62	25.24	17.36	21.67	28.57
1.0	1.0	1.0	1.0	1.1	1.1	1.1	1.1	1.1	1.1	1.1	1.1	1.2											
70.0	77.5	85.0	91.5	99.0	106.5	114.1	121.6	129.1	151.6	159.1	174.1	189.1	7.00	20.00	9.02	11.09	14.19	10.46	13.01	17.10	12.43	15.61	21.07
1.0	1.0	1.0	1.0	1.1	1.1	1.1	1.1	1.1	1.1	1.1	1.1	1.2											
58.9	66.4	74.0	80.6	88.1	95.6	103.2	110.7	118.2	140.8	148.3	163.4	178.4	10.50	30.00	16.99	20.88	26.06	17.88	22.08	27.99	19.24	23.93	31.13
1.0	1.0	1.0	1.0	1.0	1.1	1.1	1.1	1.1	1.1	1.1	1.1	1.1											
72.4	79.9	87.4	93.9	101.4	108.9	116.4	124.0	131.5	154.0	161.5	176.5	191.5	6.00	18.00	6.62	8.06	10.18	8.22	10.19	13.39	10.36	13.02	17.67
1.0	1.0	1.0	1.1	1.1	1.1	1.1	1.1	1.1	1.1	1.1	1.1	1.2											
65.9	73.4	80.9	87.5	95.0	102.5	110.0	117.5	125.1	147.6	155.1	170.1	185.1	8.00	24.00	11.37	14.02	17.95	12.66	15.73	20.57	14.45	18.11	24.26
1.0	1.0	1.0	1.0	1.1	1.1	1.1	1.1	1.1	1.1	1.1	1.1	1.2											
62.5	70.1	77.7	84.2	91.7	99.3	106.8	114.3	121.8	144.4	151.9	166.9	182.0	9.00	27.00	13.67	16.85	21.43	14.79	18.35	23.76	16.41	20.51	27.20
1.0	1.0	1.0	1.0	1.1	1.1	1.1	1.1	1.1	1.1	1.1	1.1	1.2											
59.2	66.8	74.4	80.9	88.5	96.0	103.6	111.1	118.6	141.2	148.7	163.7	178.8	10.00	30.00	15.90	19.57	24.60	16.87	20.87	26.66	18.31	22.82	29.89
1.0	1.0	1.0	1.0	1.0	1.1	1.1	1.1	1.1	1.1	1.1	1.1	1.1											
52.4	60.1	67.7	74.3	81.9	89.4	97.0	104.6	112.1	134.7	142.2	157.3	172.3	12.00	36.00	20.20	24.67	29.97	20.85	25.57	31.52	21.97	27.14	34.45
1.0	1.0	1.0	1.0	1.0	1.0	1.1	1.1	1.1	1.1	1.1	1.1	1.1											
35.6	43.8	51.8	58.6	66.4	74.2	81.8	89.5	97.1	119.9	127.5	142.6	157.7	16.00	50.00	28.05	33.37	**	28.10	33.53	**	28.62	34.50	**
0.9	0.9	1.0	1.0	1.0	1.0	1.0	1.0	1.1	1.1	1.1	1.1	1.1											
43.3	51.2	59.0	65.7	73.4	81.0	88.6	96.2	103.8	126.5	134.1	149.1	164.2	14.00	44.00	24.25	29.29	**	24.60	29.81	**	25.41	31.05	**
0.9	1.0	1.0	1.0	1.0	1.0	1.0	1.1	1.1	1.1	1.1	1.1	1.1											
59.6	67.2	74.7	81.3	88.8	96.4	103.9	111.5	119.0	141.6	149.1	164.1	179.1	9.50	30.00	14.79	18.23	23.06	15.84	19.63	25.25	17.37	21.68	28.58
1.0	1.0	1.0	1.0	1.0	1.1	1.1	1.1	1.1	1.1	1.1	1.1	1.1											
62.9	70.5	78.0	84.6	92.1	99.6	107.2	114.7	122.2	144.8	152.3	167.3	182.3	8.50	27.00	12.53	15.45	19.73	13.73	17.06	22.20	15.44	19.33	25.77
1.0	1.0	1.0	1.0	1.0	1.1	1.1	1.1	1.1	1.1	1.1	1.1	1.2											
66.2	73.8	81.3	87.8	95.4	102.9	110.4	117.9	125.4	148.0	155.5	170.5	185.5	7.50	24.00	10.21	12.57	16.11	11.57	14.39	18.88	13.45	16.88	22.7
1.0	1.1	1.1	1.1	1.1	1.1	1.1	1.1	1.1	1.1	1.1	1.1	1.2											

* Diameters below RMA minimum for non other than Cog-Belt V-belts. Use with Super Blue Ribbon or Aramax V-belts will result in reduced life and loss of efficiency.

⚠ **WARNING** ** = Sheave Rim Speed over 6000 feet per minute - see Page 236

CLASSICAL SECTION PRE-ENGINEERED DRIVE SELECTION TABLES

C, CP, CK, CX PRE-ENGINEERED TABLES RATIO 31.9 - 4.42

Driven Speed for Motor Speed of			Sheave Datum Diameters		V-Belt Number and Center Distance (other sizes may be available, see page 217)																		
870 RPM	1160 RPM	1750 RPM	Small Sheave	Large Sheave	Speed Ratio	C 51	C 55	C 60	C 71	C 75	C 81	C 85	C 90	C 96	C 100	C 105	C 115	C 128	C 136	C 144	C 158	C 162	C 173
272	363	548	11.00	36.00	3.19	—	—	—	—	—	—	—	—	—	—	—	—	25.5	29.9	34.3	41.7	43.8	49.5
						—	—	—	—	—	—	—	—	—	—	—	—	0.8	0.9	0.9	0.9	0.9	1.0
273	364	549	6.00	20.00	3.19	—	—	—	14.9	17.1	20.3	22.5	25.1	28.2	30.2	32.8	37.9	44.5	48.5	52.6	59.6	61.7	67.2
			*			—	—	—	0.7	0.8	0.8	0.8	0.9	0.9	0.9	0.9	0.9	0.9	1.0	1.0	1.0	1.0	1.0
269	359	541	9.00	30.00	3.23	—	—	—	—	—	—	—	—	—	—	—	26.2	33.2	37.4	41.5	48.7	50.8	56.4
						—	—	—	—	—	—	—	—	—	—	—	0.8	0.9	0.9	0.9	1.0	1.0	1.0
267	356	536	8.00	27.00	3.26	—	—	—	—	—	—	—	—	19.7	21.9	24.7	30.0	36.8	40.9	45.0	52.1	54.1	59.7
			*			—	—	—	—	—	—	—	—	0.8	0.8	0.8	0.9	0.9	0.9	0.9	1.0	1.0	1.0
263	350	528	13.00	44.00	3.31	—	—	—	—	—	—	—	—	—	—	—	—	—	—	—	31.9	34.2	40.2
						—	—	—	—	—	—	—	—	—	—	—	—	—	—	—	0.8	0.9	0.9
264	352	531	7.00	24.00	3.30	—	—	—	—	—	—	17.6	20.3	23.6	25.7	28.4	33.5	40.2	44.3	48.4	55.5	57.5	63.1
			*			—	—	—	—	—	—	0.8	0.8	0.8	0.8	0.9	0.9	0.9	0.9	1.0	1.0	1.0	1.0
261	347	524	10.50	36.00	3.34	—	—	—	—	—	—	—	—	—	—	—	—	25.8	30.3	34.6	42.0	44.1	49.8
						—	—	—	—	—	—	—	—	—	—	—	—	0.8	0.9	0.9	0.9	0.9	1.0
255	340	512	8.50	30.00	3.42	—	—	—	—	—	—	—	—	—	—	—	26.6	33.5	37.7	41.9	49.1	51.1	56.7
			*			—	—	—	—	—	—	—	—	—	—	—	0.8	0.9	0.9	0.9	0.9	1.0	1.0
249	331	500	14.00	50.00	3.50	—	—	—	—	—	—	—	—	—	—	—	—	—	—	—	—	—	—
						—	—	—	—	—	—	—	—	—	—	—	—	—	—	—	—	—	—
251	334	505	7.50	27.00	3.47	—	—	—	—	—	—	—	—	20.0	22.2	25.0	30.3	37.1	41.2	45.3	52.5	54.5	60.1
			*			—	—	—	—	—	—	—	—	0.8	0.8	0.8	0.9	0.9	0.9	0.9	1.0	1.0	1.0
249	331	500	10.00	36.00	3.50	—	—	—	—	—	—	—	—	—	—	—	—	26.1	30.6	34.9	42.3	44.4	50.2
						—	—	—	—	—	—	—	—	—	—	—	—	0.8	0.9	0.9	0.9	0.9	0.9
244	326	491	16.00	58.00	3.56	—	—	—	—	—	—	—	—	—	—	—	—	—	—	—	—	—	—
						—	—	—	—	—	—	—	—	—	—	—	—	—	—	—	—	—	—
243	324	489	12.00	44.00	3.58	—	—	—	—	—	—	—	—	—	—	—	—	—	—	—	32.6	34.8	40.9
						—	—	—	—	—	—	—	—	—	—	—	—	—	—	—	0.8	0.8	0.9
240	321	484	8.00	30.00	3.62	—	—	—	—	—	—	—	—	—	—	21.3	26.9	33.8	38.0	42.2	49.4	51.5	57.1
			*			—	—	—	—	—	—	—	—	—	—	0.8	0.8	0.9	0.9	0.9	0.9	1.0	1.0
237	315	476	9.50	36.00	3.68	—	—	—	—	—	—	—	—	—	—	—	—	26.4	30.9	35.2	42.7	44.8	50.5
						—	—	—	—	—	—	—	—	—	—	—	—	0.8	0.8	0.9	0.9	0.9	0.9
231	308	465	13.00	50.00	3.76	—	—	—	—	—	—	—	—	—	—	—	—	—	—	—	—	—	—
						—	—	—	—	—	—	—	—	—	—	—	—	—	—	—	—	—	—
235	313	473	7.00	27.00	3.70	—	—	—	—	—	—	—	—	20.3	22.6	25.3	30.6	37.4	41.6	45.7	52.8	54.9	60.4
			*			—	—	—	—	—	—	—	—	0.8	0.8	0.8	0.9	0.9	0.9	0.9	1.0	1.0	1.0
228	304	459	6.00	24.00	3.81	—	—	—	—	—	—	18.2	21.0	24.2	26.4	29.0	34.2	40.9	45.0	49.1	56.2	58.2	63.8
			*			—	—	—	—	—	—	0.8	0.8	0.8	0.8	0.9	0.9	0.9	0.9	0.9	1.0	1.0	1.0
226	301	455	7.50	30.00	3.85	—	—	—	—	—	—	—	—	—	—	21.6	27.2	34.2	38.4	42.5	49.7	51.8	57.4
			*			—	—	—	—	—	—	—	—	—	—	0.8	0.8	0.9	0.9	0.9	0.9	1.0	1.0
225	300	452	9.00	36.00	3.87	—	—	—	—	—	—	—	—	—	—	—	—	26.7	31.2	35.6	43.0	45.1	50.8
						—	—	—	—	—	—	—	—	—	—	—	—	0.8	0.8	0.9	0.9	0.9	0.9
223	298	449	11.00	44.00	3.89	—	—	—	—	—	—	—	—	—	—	—	—	—	—	—	33.2	35.4	41.5
						—	—	—	—	—	—	—	—	—	—	—	—	—	—	—	0.8	0.9	0.9
215	286	432	14.00	58.00	4.06	—	—	—	—	—	—	—	—	—	—	—	—	—	—	—	—	—	—
						—	—	—	—	—	—	—	—	—	—	—	—	—	—	—	—	—	—
214	285	431	12.00	50.00	4.06	—	—	—	—	—	—	—	—	—	—	—	—	—	—	—	—	—	34.0
						—	—	—	—	—	—	—	—	—	—	—	—	—	—	—	—	—	0.8
214	285	430	10.50	44.00	4.07	—	—	—	—	—	—	—	—	—	—	—	—	—	—	—	33.5	35.7	41.8
						—	—	—	—	—	—	—	—	—	—	—	—	—	—	—	0.8	0.9	0.9
213	284	428	8.50	36.00	4.09	—	—	—	—	—	—	—	—	—	—	—	—	27.0	31.5	35.9	43.3	45.4	51.2
			*			—	—	—	—	—	—	—	—	—	—	—	—	0.8	0.8	0.9	0.9	0.9	0.9
212	282	426	7.00	30.00	4.11	—	—	—	—	—	—	—	—	—	—	21.9	27.5	34.5	38.7	42.9	50.1	52.1	57.8
			*			—	—	—	—	—	—	—	—	—	—	0.8	0.8	0.9	0.9	0.9	0.9	1.0	1.0
204	272	410	10.00	44.00	4.27	—	—	—	—	—	—	—	—	—	—	—	—	—	—	—	33.8	36.1	42.1
						—	—	—	—	—	—	—	—	—	—	—	—	—	—	—	0.8	0.9	0.9
200	266	402	13.00	58.00	4.36	—	—	—	—	—	—	—	—	—	—	—	—	—	—	—	—	—	—
						—	—	—	—	—	—	—	—	—	—	—	—	—	—	—	—	—	—
203	271	409	6.00	27.00	4.28	—	—	—	—	—	—	—	—	20.9	23.2	25.9	31.3	38.1	42.2	46.4	53.5	55.6	61.2
			*			—	—	—	—	—	—	—	—	0.8	0.8	0.8	0.9	0.9	0.9	0.9	1.0	1.0	1.0
201	268	404	8.00	36.00	4.33	—	—	—	—	—	—	—	—	—	—	—	—	27.3	31.8	36.2	43.7	45.8	51.5
			*			—	—	—	—	—	—	—	—	—	—	—	—	0.8	0.8	0.9	0.9	0.9	0.9
197	262	396	11.00	50.00	4.42	—	—	—	—	—	—	—	—	—	—	—	—	—	—	—	—	—	34.6
						—	—	—	—	—	—	—	—	—	—	—	—	—	—	—	—	—	0.8

* Diameters below RMA minimum for other than Cog-Belt V-belts. Use with Super Blue Ribbon or Aramax V-belts will result in reduced life and loss of efficiency.

⚠ **WARNING** ** = Sheave Rim Speed over 6000 feet per minute - see Page 236

CLASSICAL SECTION PRE-ENGINEERED DRIVE SELECTION TABLES

C, CP, CK, CX PRE-ENGINEERED TABLES — RATIO 3.19 - 4.42

V-Belt Number and Center Distance (Other sizes may be available, see page 217)													Sheave Datum Diameters		Rated HP per Belt (Includes Added HP for Speed Ratio)								
															Super Blue Ribbon & Aramax (CP & CK) RPM of Small Sheave			Super II (C) RPM of Small Sheave			Gold Label Cog-Belt (CX) RPM of Small Sheave		
C 180	C 195	C 210	C 225	C 240	C 255	C 270	C 285	C 300	C 345	C 360	C 390	C 420	Small Sheave	Large Sheave	870 RPM	1160 RPM	1750 RPM	870 RPM	1160 RPM	1750 RPM	870 RPM	1160 RPM	1750 RPM
53.1	60.8	68.4	75.0	82.6	90.2	97.7	105.3	112.8	135.5	143.0	158.0	173.1	11.00	36.00	18.08	22.18	27.47	18.89	23.28	29.27	30.17	25.04	32.32
1.0	1.0	1.0	1.0	1.0	1.0	1.1	1.1	1.1	1.1	1.1	1.1	1.1											
70.7	78.2	85.8	92.3	99.8	107.3	114.8	122.3	129.8	152.4	159.9	174.9	189.9	6.00	20.00	6.62	8.06	10.19	8.23	10.20	13.41	10.37	13.03	17.68
1.0	1.0	1.0	1.0	1.1	1.1	1.1	1.1	1.1	1.1	1.1	1.1	1.2											
59.9	67.5	75.1	81.6	89.2	96.7	104.3	111.8	119.4	141.9	149.5	164.5	179.5	9.00	30.00	13.67	16.86	21.44	14.80	8.36	23.77	16.41	20.52	27.21
1.0	1.0	1.0	1.0	1.0	1.1	1.1	1.1	1.1	1.1	1.1	1.1	1.1											
63.3	70.8	78.4	84.9	92.5	100.0	107.5	115.1	122.6	145.2	152.7	167.7	182.7	8.00	27.00	11.38	14.03	17.96	12.66	15.74	20.58	14.45	18.12	24.27
1.0	1.0	1.0	1.0	1.0	1.1	1.1	1.1	1.1	1.1	1.1	1.1	1.2											
44.0	51.9	59.7	66.4	74.1	81.7	89.3	96.9	104.5	127.2	134.8	149.9	165.0	13.00	44.00	22.26	27.05	32.13	22.76	27.76	33.46	23.72	29.15	36.30
1.0	1.0	1.0	1.0	1.0	1.0	1.0	1.1	1.1	1.1	1.1	1.1	1.1											
66.6	74.1	81.7	88.2	95.7	103.3	110.8	118.3	125.8	148.4	155.9	170.9	185.9	7.00	24.00	9.03	11.10	14.21	10.47	13.02	17.12	12.44	15.62	21.09
1.0	1.0	1.0	1.0	1.1	1.1	1.1	1.1	1.1	1.1	1.1	1.1	1.2											
53.4	61.1	68.8	75.4	82.9	90.5	98.1	105.7	113.2	135.8	143.4	158.4	173.5	10.50	36.00	17.00	20.90	26.08	17.89	22.09	28.01	19.25	23.95	31.15
1.0	1.0	1.0	1.0	1.0	1.0	1.1	1.1	1.1	1.1	1.1	1.1	1.1											
60.3	67.9	75.5	82.0	89.6	97.1	104.7	112.2	119.7	142.3	149.8	164.9	179.9	8.50	30.00	12.53	15.46	19.74	13.74	17.06	22.21	15.44	19.33	25.77
1.0	1.0	1.0	1.0	1.0	1.1	1.1	1.1	1.1	1.1	1.1	1.1	1.1											
36.8	45.1	53.2	60.0	67.8	75.5	83.2	90.9	98.5	121.3	128.9	144.1	159.2	14.00	50.00	24.26	29.29	**	24.61	29.82	**	25.41	31.05	**
1.0	1.0	1.0	1.0	1.0	1.0	1.0	1.0	1.1	1.1	1.1	1.1	1.1											
63.6	71.2	78.8	85.3	92.8	100.4	107.9	115.4	123.0	145.5	153.0	168.1	183.1	7.50	27.00	10.21	12.58	16.12	11.58	14.39	18.89	13.46	16.88	22.71
1.0	1.0	1.0	1.0	1.0	1.1	1.1	1.1	1.1	1.1	1.1	1.1	1.1											
53.8	61.5	69.1	75.7	83.3	90.9	98.5	106.0	113.6	136.2	143.7	158.8	173.8	10.00	36.00	15.91	19.58	24.62	16.88	20.88	26.88	18.32	22.83	29.90
1.0	1.0	1.0	1.0	1.0	1.0	1.1	1.1	1.1	1.1	1.1	1.1	1.1											
—	—	43.3	50.5	58.6	66.5	74.4	82.1	89.9	112.9	120.5	135.7	150.9	16.00	58.00	28.06	33.37	**	28.11	33.54	**	28.63	34.51	**
—	—	0.9	0.9	1.0	1.0	1.0	1.0	1.0	1.1	1.1	1.1	1.1											
44.6	52.6	60.4	67.1	74.8	82.4	90.0	97.7	105.3	128.0	135.5	150.6	165.7	12.00	44.00	20.21	24.68	29.99	20.86	25.58	31.54	21.98	27.15	34.47
0.9	0.9	1.0	1.0	1.0	1.0	1.0	1.1	1.1	1.1	1.1	1.1	1.1											
60.6	68.2	75.8	82.4	89.9	97.5	105.0	112.6	120.1	142.7	150.2	165.2	180.3	8.00	30.00	11.38	14.04	17.97	12.67	15.74	20.59	14.46	18.12	24.28
1.0	1.0	1.0	1.0	1.0	1.1	1.1	1.1	1.1	1.1	1.1	1.1	1.1											
54.1	61.8	69.5	76.1	83.7	91.3	98.8	106.4	113.9	136.6	144.1	159.2	174.2	9.50	36.00	14.80	18.24	23.07	15.85	19.64	25.27	17.38	21.69	28.60
1.0	1.0	1.0	1.0	1.0	1.0	1.1	1.1	1.1	1.1	1.1	1.1	1.1											
37.4	45.8	53.8	60.6	68.5	76.2	83.9	91.6	99.2	122.1	129.7	144.8	159.9	13.00	50.00	22.27	27.05	32.14	22.77	27.76	33.47	23.72	29.16	36.31
0.9	0.9	0.9	1.0	1.0	1.0	1.0	1.0	1.1	1.1	1.1	1.1	1.1											
64.0	71.6	79.1	85.7	93.2	100.8	108.3	115.8	123.3	145.9	153.4	168.4	183.5	7.00	27.00	9.04	11.10	14.22	10.48	13.02	17.13	12.44	15.63	21.10
1.0	1.0	1.0	1.0	1.0	1.1	1.1	1.1	1.1	1.1	1.1	1.1	1.1											
67.3	74.9	82.4	88.9	96.5	104.0	111.5	119.0	126.6	149.1	156.6	171.7	186.7	6.00	24.00	6.63	8.07	10.20	8.23	10.20	13.42	10.38	13.04	17.70
1.0	1.0	1.0	1.0	1.1	1.1	1.1	1.1	1.1	1.1	1.1	1.1	1.2											
61.0	68.6	76.2	82.7	90.3	97.9	105.4	112.9	120.5	143.1	150.6	165.6	180.6	7.50	30.00	10.22	12.58	16.13	11.58	14.40	18.89	13.46	16.89	22.72
1.0	1.0	1.0	1.0	1.0	1.1	1.1	1.1	1.1	1.1	1.1	1.1	1.1											
54.5	62.2	69.8	76.4	84.0	91.6	99.2	106.8	114.3	136.9	144.5	159.5	174.6	9.00	36.00	13.68	16.87	21.45	14.80	18.37	23.78	16.42	20.53	27.22
1.0	1.0	1.0	1.0	1.0	1.0	1.1	1.1	1.1	1.1	1.1	1.1	1.1											
45.3	53.2	61.0	67.7	75.4	83.1	90.8	98.4	106.0	128.7	136.3	151.4	166.4	11.00	44.00	18.09	22.19	27.48	18.90	23.29	29.28	20.18	25.05	32.33
0.9	0.9	1.0	1.0	1.0	1.0	1.0	1.1	1.1	1.1	1.1	1.1	1.1											
—	—	44.5	51.7	59.9	67.8	75.7	83.5	91.2	114.3	121.9	137.1	152.3	14.00	58.00	24.26	29.30	**	24.61	29.82	**	25.42	31.06	**
—	—	0.9	0.9	1.0	1.0	1.0	1.0	1.0	1.1	1.1	1.1	1.1											
38.0	46.4	54.5	61.3	69.1	76.9	84.6	92.3	99.9	122.8	130.4	145.5	160.6	12.00	50.00	20.21	24.69	29.99	20.86	25.59	31.55	21.98	27.16	34.47
0.9	0.9	0.9	1.0	1.0	1.0	1.0	1.0	1.1	1.1	1.1	1.1	1.1											
45.6	53.5	61.4	68.1	75.8	83.5	91.1	98.7	106.3	129.1	136.6	151.7	166.8	10.50	44.00	17.01	20.91	26.10	17.90	22.10	28.02	19.26	23.95	31.16
0.9	0.9	1.0	1.0	1.0	1.0	1.0	1.1	1.1	1.1	1.1	1.1	1.1											
54.8	62.5	70.2	76.8	84.4	92.0	99.6	107.1	114.7	137.3	144.8	159.9	175.0	8.50	36.00	12.54	15.47	19.75	13.74	17.07	22.22	15.45	19.34	25.79
1.0	1.0	1.0	1.0	1.0	1.0	1.1	1.1	1.1	1.1	1.1	1.1	1.1											
61.3	69.0	76.5	83.1	90.7	98.2	105.8	113.3	120.8	143.4	151.0	166.0	181.0	7.00	30.00	9.04	11.11	14.22	10.48	13.03	17.14	12.45	15.63	21.11
1.0	1.0	1.0	1.0	1.0	1.1	1.1	1.1	1.1	1.1	1.1	1.1	1.1											
45.9	53.9	61.7	68.4	76.1	83.8	91.5	99.1	106.7	129.4	137.0	152.1	167.2	10.00	44.00	15.92	19.59	24.63	16.88	20.89	26.69	18.33	22.84	29.92
0.9	0.9	1.0	1.0	1.0	1.0	1.0	1.1	1.1	1.1	1.1	1.1	1.1											
—	—	45.1	52.4	60.5	68.5	76.4	84.2	91.9	115.0	122.6	137.9	153.0	13.00	58.00	22.27	27.06	32.14	22.77	27.77	33.47	23.73	29.16	36.32
—	—	0.9	0.9	1.0	1.0	1.0	1.0	1.0	1.1	1.1	1.1	1.1											
64.7	72.3	79.9	86.4	93.9	101.5	109.0	116.6	124.1	146.7	154.2	169.2	184.2	6.00	27.00	6.63	8.08	10.21	8.24	10.21	13.43	10.38	13.04	17.70
1.0	1.0	1.0	1.0	1.0	1.1	1.1	1.1	1.1	1.1	1.1	1.1	1.1											
55.1	62.9	70.5	77.1	84.7	92.3	99.9	107.5	115.0	137.7	145.2	160.3	175.3	8.00	36.00	11.39	14.04	17.98	12.67	15.75	20.60	14.46	18.13	24.29
1.0	1.0	1.0	1.0	1.0	1.0	1.1	1.1	1.1	1.1	1.1	1.1	1.1											
38.6	47.0	55.1	62.0	69.8	77.6	85.3	93.0	100.7	123.5	131.1	146.2	161.4	11.00	50.00	18.09	22.20	27.49	18.90	23.29	29.29	20.18	25.05	32.34
0.8	0.9	0.9	1.0	1.0	1.0	1.0	1.0	1.1	1.1	1.1	1.1	1.1											

* Diameters below RMA minimum for other than Cog-Belt V-belts. Use with Super Blue Ribbon or Aramax V-belts will result in reduced life and loss of efficiency.

⚠ **WARNING** ** = Sheave Rim Speed over 6000 feet per minute - see Page 236

CLASSICAL SECTION PRE-ENGINEERED DRIVE SELECTION TABLES

C, CP, CK, CX PRE-ENGINEERED TABLES RATIO 4.48 - 9.13

Driven Speed for Motor Speed of			Sheave Datum Diameters		V-Belt Number and Center Distance (other sizes may be available, see page 217)																			
870 RPM	1160 RPM	1750 RPM	Small Sheave	Large Sheave	Speed Ratio	C 51	C 55	C 60	C 71	C 75	C 81	C 85	C 90	C 96	C 100	C 105	C 115	C 128	C 136	C 144	C 158	C 162	C 173
194	259	390	9.50	44.00	4.48	—	—	—	—	—	—	—	—	—	—	—	—	—	—	—	34.1	36.4	42.4
						—	—	—	—	—	—	—	—	—	—	—	—	—	—	—	0.8	0.9	0.9
188	251	378	10.50	50.00	4.62	—	—	—	—	—	—	—	—	—	—	—	—	—	—	—	—	—	34.9
						—	—	—	—	—	—	—	—	—	—	—	—	—	—	—	—	—	0.8
189	252	380	7.50	36.00	4.61	—	—	—	—	—	—	—	—	—	—	—	—	27.6	32.1	36.5	44.0	46.1	51.8
			*			—	—	—	—	—	—	—	—	—	—	—	—	0.8	0.8	0.9	0.9	0.9	0.9
185	246	372	12.00	58.00	4.71	—	—	—	—	—	—	—	—	—	—	—	—	—	—	—	—	—	—
						—	—	—	—	—	—	—	—	—	—	—	—	—	—	—	—	—	—
184	246	370	9.00	44.00	4.72	—	—	—	—	—	—	—	—	—	—	—	—	—	—	—	34.4	36.7	42.8
						—	—	—	—	—	—	—	—	—	—	—	—	—	—	—	0.8	0.8	0.9
183	244	368	6.00	30.00	4.75	—	—	—	—	—	—	—	—	—	—	22.5	28.1	35.1	39.4	43.5	50.8	52.8	58.5
			*			—	—	—	—	—	—	—	—	—	—	0.8	0.8	0.9	0.9	0.9	0.9	1.0	1.0
180	239	361	10.00	50.00	4.85	—	—	—	—	—	—	—	—	—	—	—	—	—	—	—	—	—	35.2
						—	—	—	—	—	—	—	—	—	—	—	—	—	—	—	—	—	0.9
177	236	356	7.00	36.00	4.92	—	—	—	—	—	—	—	—	—	—	—	—	27.9	32.5	36.8	44.3	46.4	52.2
			*			—	—	—	—	—	—	—	—	—	—	—	—	0.8	0.8	0.9	0.9	0.9	0.9
174	233	351	8.50	44.00	4.99	—	—	—	—	—	—	—	—	—	—	—	—	—	—	—	34.7	37.0	43.1
			*			—	—	—	—	—	—	—	—	—	—	—	—	—	—	—	0.8	0.8	0.9
171	228	344	9.50	50.00	5.09	—	—	—	—	—	—	—	—	—	—	—	—	—	—	—	—	—	35.5
						—	—	—	—	—	—	—	—	—	—	—	—	—	—	—	—	—	0.8
170	226	342	11.00	58.00	5.12	—	—	—	—	—	—	—	—	—	—	—	—	—	—	—	—	—	—
						—	—	—	—	—	—	—	—	—	—	—	—	—	—	—	—	—	—
165	219	331	8.00	44.00	5.29	—	—	—	—	—	—	—	—	—	—	—	—	—	—	—	35.0	37.3	43.4
			*			—	—	—	—	—	—	—	—	—	—	—	—	—	—	—	0.8	0.8	0.9
162	217	327	10.50	58.00	5.36	—	—	—	—	—	—	—	—	—	—	—	—	—	—	—	—	—	—
						—	—	—	—	—	—	—	—	—	—	—	—	—	—	—	—	—	—
162	216	326	9.00	50.00	5.36	—	—	—	—	—	—	—	—	—	—	—	—	—	—	—	—	—	35.8
						—	—	—	—	—	—	—	—	—	—	—	—	—	—	—	—	—	0.8
155	207	312	10.00	58.00	5.62	—	—	—	—	—	—	—	—	—	—	—	—	—	—	—	—	—	—
						—	—	—	—	—	—	—	—	—	—	—	—	—	—	—	—	—	—
155	206	311	7.50	44.00	5.62	—	—	—	—	—	—	—	—	—	—	—	—	—	—	—	—	37.6	43.7
			*			—	—	—	—	—	—	—	—	—	—	—	—	—	—	—	—	0.8	0.9
154	205	309	8.50	50.00	5.66	—	—	—	—	—	—	—	—	—	—	—	—	—	—	—	—	—	36.1
			*			—	—	—	—	—	—	—	—	—	—	—	—	—	—	—	—	—	0.8
153	204	308	6.00	36.00	5.69	—	—	—	—	—	—	—	—	—	—	—	—	28.5	33.1	37.5	45.0	47.1	52.9
			*			—	—	—	—	—	—	—	—	—	—	—	—	0.8	0.8	0.9	0.9	0.9	0.9
147	197	297	9.50	58.00	5.90	—	—	—	—	—	—	—	—	—	—	—	—	—	—	—	—	—	—
						—	—	—	—	—	—	—	—	—	—	—	—	—	—	—	—	—	—
145	193	292	8.00	50.00	6.00	—	—	—	—	—	—	—	—	—	—	—	—	—	—	—	—	—	36.4
			*			—	—	—	—	—	—	—	—	—	—	—	—	—	—	—	—	—	0.8
145	193	292	7.00	44.00	6.00	—	—	—	—	—	—	—	—	—	—	—	—	—	—	—	35.6	37.9	44.0
			*			—	—	—	—	—	—	—	—	—	—	—	—	—	—	—	0.8	0.8	0.9
140	187	282	9.00	58.00	6.21	—	—	—	—	—	—	—	—	—	—	—	—	—	—	—	—	—	—
						—	—	—	—	—	—	—	—	—	—	—	—	—	—	—	—	—	—
136	182	274	7.50	50.00	6.38	—	—	—	—	—	—	—	—	—	—	—	—	—	—	—	—	—	36.7
			*			—	—	—	—	—	—	—	—	—	—	—	—	—	—	—	—	—	0.8
133	177	267	8.50	58.00	6.56	—	—	—	—	—	—	—	—	—	—	—	—	—	—	—	—	—	—
			*			—	—	—	—	—	—	—	—	—	—	—	—	—	—	—	—	—	—
128	170	257	7.00	50.00	6.81	—	—	—	—	—	—	—	—	—	—	—	—	—	—	—	—	—	36.9
			*			—	—	—	—	—	—	—	—	—	—	—	—	—	—	—	—	—	0.8
125	167	252	8.00	58.00	6.95	—	—	—	—	—	—	—	—	—	—	—	—	—	—	—	—	—	—
			*			—	—	—	—	—	—	—	—	—	—	—	—	—	—	—	—	—	—
125	167	252	6.00	44.00	6.94	—	—	—	—	—	—	—	—	—	—	—	—	—	—	27.7	36.2	38.5	44.7
			*			—	—	—	—	—	—	—	—	—	—	—	—	—	—	0.7	0.8	0.8	0.9
118	157	237	7.50	58.00	7.39	—	—	—	—	—	—	—	—	—	—	—	—	—	—	—	—	—	—
			*			—	—	—	—	—	—	—	—	—	—	—	—	—	—	—	—	—	—
110	147	222	7.00	58.00	7.89	—	—	—	—	—	—	—	—	—	—	—	—	—	—	—	—	—	—
			*			—	—	—	—	—	—	—	—	—	—	—	—	—	—	—	—	—	—
110	147	222	6.00	50.00	7.88	—	—	—	—	—	—	—	—	—	—	—	—	—	—	—	—	30.6	37.5
			*			—	—	—	—	—	—	—	—	—	—	—	—	—	—	—	—	0.7	0.8
95	127	192	6.00	58.00	9.13	—	—	—	—	—	—	—	—	—	—	—	—	—	—	—	—	—	—
			*			—	—	—	—	—	—	—	—	—	—	—	—	—	—	—	—	—	—

* Diameters below RMA minimum for other than Cog-Belt V-belts. Use with Super Blue Ribbon or Aramax V-belts will result in reduced life and loss of efficiency.

⚠**WARNING** ** = Sheave Rim Speed over 6000 feet per minute - see Page 236

CLASSICAL SECTION PRE-ENGINEERED DRIVE SELECTION TABLES

C, CP, CK, CX PRE-ENGINEERED TABLES — RATIO 4.48 - 9.13

V-Belt Number and Center Distance (Other sizes may be available, see page 217)													Sheave Datum Diameters		Rated HP per Belt (Includes Added HP for Speed Ratio)								
															Super Blue Ribbon & Aramax (CP & CK) RPM of Small Sheave			Super II (C) RPM of Small Sheave			Gold Label Cog-Belt (CX) RPM of Small Sheave		
C 180	C 195	C 210	C 225	C 240	C 255	C 270	C 285	C 300	C 345	C 360	C 390	C 420	Small Sheave	Large Sheave	870 RPM	1160 RPM	1750 RPM	870 RPM	1160 RPM	1750 RPM	870 RPM	1160 RPM	1750 RPM
46.2	54.2	62.1	68.8	76.5	84.2	91.8	99.4	107.0	129.8	137.3	152.5	167.5	9.50	44.00	14.81	18.24	23.08	15.85	19.64	25.28	17.38	21.70	28.61
0.9	0.9	1.0	1.0	1.0	1.0	1.0	1.1	1.1	1.1	1.1	1.1	1.1											
38.9	47.3	55.4	62.3	70.2	77.9	85.7	93.3	101.0	123.9	131.4	146.6	161.7	10.50	50.00	17.01	20.91	26.10	17.90	22.11	28.03	19.26	23.96	31.16
0.8	0.9	0.9	1.0	1.0	1.0	1.0	1.0	1.1	1.1	1.1	1.1	1.1											
55.5	63.2	70.9	77.5	85.1	92.7	100.3	107.8	115.4	138.0	145.6	160.7	175.7	7.50	36.00	10.22	12.59	16.14	11.59	14.40	18.90	13.46	16.90	22.73
1.0	1.0	1.0	1.0	1.0	1.0	1.1	1.1	1.1	1.1	1.1	1.1	1.1											
—	-0.0	45.7	53.0	61.1	69.1	77.0	84.9	92.6	115.7	123.3	138.6	153.8	12.00	58.00	20.21	24.69	30.00	20.87	25.59	31.56	21.98	27.16	34.48
—	-0.0	0.9	0.9	0.9	1.0	1.0	1.0	1.0	1.1	1.1	1.1	1.1											
46.6	54.5	62.4	69.1	76.8	84.5	92.2	99.8	107.4	130.1	137.7	152.8	167.9	9.00	44.00	13.68	16.87	21.46	14.81	18.37	23.79	16.42	20.53	27.23
0.9	0.9	1.0	1.0	1.0	1.0	1.0	1.1	1.1	1.1	1.1	1.1	1.1											
62.0	69.7	77.3	83.8	91.4	98.9	106.5	114.0	121.6	144.2	151.7	166.7	181.8	6.00	30.00	6.63	8.08	10.21	8.24	10.21	13.43	10.38	13.04	17.71
1.0	1.0	1.0	1.0	1.0	1.1	1.1	1.1	1.1	1.1	1.1	1.1	1.1											
39.3	47.7	55.8	62.6	70.5	78.3	86.0	93.7	101.4	124.2	131.8	147.0	162.1	10.00	50.00	15.92	19.59	24.64	16.88	20.89	26.69	18.33	22.84	29.92
0.8	0.9	0.9	1.0	1.0	1.0	1.0	1.0	1.1	1.1	1.1	1.1	1.1											
55.8	63.5	71.2	77.8	85.4	93.0	100.6	108.2	115.8	138.4	146.0	161.0	176.1	7.00	36.00	9.04	11.11	14.23	10.49	13.03	17.14	12.45	15.64	21.11
1.0	1.0	1.0	1.0	1.0	1.0	1.1	1.1	1.1	1.1	1.1	1.1	1.1											
46.9	54.9	62.7	69.4	77.2	84.9	92.5	100.1	107.8	130.5	138.1	153.2	168.3	8.50	44.00	12.54	15.47	19.76	13.75	17.08	22.23	15.45	19.35	25.79
0.9	0.9	1.0	1.0	1.0	1.0	1.0	1.1	1.1	1.1	1.1	1.1	1.1											
39.6	48.0	56.1	63.0	70.8	78.6	86.3	94.0	101.7	124.6	132.2	147.3	162.5	9.50	50.00	14.81	18.25	23.09	15.85	19.65	25.28	17.38	21.70	28.61
0.8	0.9	0.9	1.0	1.0	1.0	1.0	1.0	1.1	1.1	1.1	1.1	1.1											
—	37.4	46.3	53.6	61.8	69.8	77.7	85.5	93.3	116.4	124.0	139.3	154.5	11.00	58.00	18.10	22.20	27.49	18.90	23.30	29.29	20.18	25.05	32.34
—	0.8	0.9	0.9	0.9	1.0	1.0	1.0	1.0	1.1	1.1	1.1	1.1											
47.2	55.2	63.1	69.8	77.5	85.2	92.9	100.5	108.1	130.9	138.4	153.6	168.6	8.00	44.00	11.39	14.05	17.99	12.68	15.76	20.60	14.47	18.13	24.29
0.9	0.9	1.0	1.0	1.0	1.0	1.0	1.0	1.1	1.1	1.1	1.1	1.1											
—	37.7	46.6	53.9	62.1	70.1	78.0	85.9	93.6	116.7	124.4	139.6	154.8	10.50	58.00	17.02	20.91	26.11	17.90	22.11	28.03	19.26	23.96	31.17
—	0.8	0.9	0.9	1.0	1.0	1.0	1.0	1.0	1.1	1.1	1.1	1.1											
39.9	48.3	56.4	63.3	71.2	79.0	86.7	94.4	102.1	124.9	132.5	147.7	162.8	9.00	50.00	13.68	16.87	21.46	14.81	18.38	23.79	16.43	20.54	27.24
0.8	0.9	0.9	1.0	1.0	1.0	1.0	1.0	1.0	1.1	1.1	1.1	1.1											
—	38.0	46.9	54.2	62.4	70.5	78.4	86.2	94.0	117.1	124.7	140.0	155.2	10.00	58.00	15.92	19.59	24.64	16.89	20.89	26.70	18.33	22.84	29.92
—	0.8	0.9	0.9	0.9	1.0	1.0	1.0	1.0	1.1	1.1	1.1	1.1											
47.5	55.5	63.4	70.1	77.9	85.6	93.2	100.9	108.5	131.2	138.8	153.9	169.0	7.50	44.00	10.23	12.59	16.15	11.59	14.41	18.91	13.47	16.90	22.74
0.9	0.9	1.0	1.0	1.0	1.0	1.0	1.0	1.1	1.1	1.1	1.1	1.1											
40.2	48.6	56.7	63.6	71.5	79.3	87.0	94.7	102.4	125.3	132.9	148.1	163.2	8.50	50.00	12.55	15.47	19.76	13.75	17.08	22.24	1545	19.35	25.80
0.8	0.9	0.9	1.0	1.0	1.0	1.0	1.0	1.0	1.1	1.1	1.1	1.1											
56.5	64.2	71.9	78.5	86.2	93.8	101.4	108.9	116.5	139.2	146.7	161.8	176.8	6.00	36.00	6.64	8.08	10.22	8.24	10.21	13.43	10.38	13.05	17.71
1.0	1.0	1.0	1.0	1.0	1.0	1.1	1.1	1.1	1.1	1.1	1.1	1.1											
—	38.3	47.2	54.5	62.7	70.8	78.7	86.5	94.3	117.4	125.1	140.3	155.5	9.50	58.00	14.81	18.25	23.09	15.85	19.65	25.28	17.39	21.70	28.61
—	0.8	0.9	0.9	0.9	1.0	1.0	1.0	1.0	1.1	1.1	1.1	1.1											
40.5	48.9	57.1	63.9	71.8	79.6	87.4	95.1	102.8	125.6	133.2	148.4	163.5	8.00	50.00	11.39	14.05	17.99	12.68	15.76	20.61	14.47	18.14	24.30
0.8	0.9	0.9	1.0	1.0	1.0	1.0	1.0	1.0	1.1	1.1	1.1	1.1											
47.8	55.9	63.7	70.5	78.2	85.9	93.6	101.2	108.8	131.6	139.2	154.3	169.4	7.00	44.00	9.04	11.12	14.24	10.49	13.04	17.15	12.45	15.64	21.12
0.9	0.9	1.0	1.0	1.0	1.0	1.0	1.0	1.1	1.1	1.1	1.1	1.1											
—	38.6	47.5	54.9	63.1	71.1	79.0	86.9	94.7	117.8	125.4	140.7	155.9	9.00	58.00	13.69	16.88	21.47	14.81	18.38	23.80	16.43	20.54	37.24
—	0.8	0.9	0.9	0.9	1.0	1.0	1.0	1.0	1.1	1.1	1.1	1.1											
40.8	49.2	57.4	64.3	72.2	80.0	87.7	95.4	103.1	126.0	133.6	148.8	163.9	7.50	50.00	10.23	13.60	13.15	11.59	14.41	18.91	13.47	16.90	22.74
0.8	0.9	0.9	1.0	1.0	1.0	1.0	1.0	1.0	1.1	1.1	1.1	1.1											
—	38.9	47.8	55.2	63.4	71.4	79.4	87.2	95.0	118.1	125.8	141.0	156.3	8.50	58.00	12.55	15.48	19.77	13.75	17.08	22.24	15.45	19.35	25.80
—	0.8	0.9	0.9	0.9	1.0	1.0	1.0	1.0	1.1	1.1	1.1	1.1											
41.1	49.5	57.7	64.6	72.5	80.3	88.1	95.8	103.4	126.4	134.0	149.1	164.3	7.00	50.00	9.05	11.12	14.24	10.49	13.04	17.15	12.45	15.64	21.12
0.8	0.9	0.9	1.0	1.0	1.0	1.0	1.0	1.0	1.1	1.1	1.1	1.1											
—	39.2	48.1	55.5	63.7	71.8	79.7	87.5	95.3	118.5	126.1	141.4	156.6	8.00	58.00	11.39	14.05	17.99	12.68	15.76	20.61	14.47	18.14	24.30
—	0.8	0.9	0.9	0.9	1.0	1.0	1.0	1.0	1.1	1.1	1.1	1.1											
48.5	56.5	64.4	71.1	78.9	86.6	94.3	101.9	109.5	132.3	139.9	155.0	170.1	6.00	44.00	6.64	8.09	10.22	8.24	10.22	13.44	10.39	13.05	17.72
0.9	0.9	1.0	1.0	1.0	1.0	1.0	1.0	1.1	1.1	1.1	1.1	1.1											
—	39.4	48.4	55.8	64.0	72.1	80.0	87.9	95.7	118.8	126.5	141.8	157.0	7.50	58.00	10.23	12.60	16.15	11.59	14.41	18.91	13.47	16.90	22.74
—	0.8	0.9	0.9	0.9	1.0	1.0	1.0	1.0	1.1	1.1	1.1	1.1											
—	39.7	48.8	56.1	64.3	72.4	80.4	88.2	96.0	119.2	126.8	142.1	157.3	7.00	58.00	9.05	11.12	14.24	10.49	13.04	17.15	12.46	15.64	21.12
—	0.8	0.9	0.9	0.9	1.0	1.0	1.0	1.0	1.1	1.1	1.1	1.1											
41.7	50.2	58.3	65.3	73.2	81.0	88.7	96.5	104.1	127.1	134.7	149.9	165.0	6.00	50.00	6.64	8.09	10.22	8.24	10.22	13.44	10.39	13.05	17.72
0.8	0.9	0.9	1.0	1.0	1.0	1.0	1.0	1.0	1.1	1.1	1.1	1.1											
—	40.3	49.4	56.7	65.0	73.1	81.0	88.9	96.7	119.9	127.5	142.8	158.0	6.00	58.00	6.64	8.09	10.22	8.24	10.22	13.44	10.39	13.05	17.72
—	0.8	0.9	0.9	0.9	1.0	1.0	1.0	1.0	1.1	1.1	1.1	1.1											

* Diameters below RMA minimum for other than Cog-Belt V-belts. Use with Super Blue Ribbon or Aramax V-belts will result in reduced life and loss of efficiency.

⚠ **WARNING** ** = Sheave Rim Speed over 6000 feet per minute - see Page 236

CLASSICAL SECTION PRE-ENGINEERED DRIVE SELECTION TABLES

DP, DX PRE-ENGINEERED TABLES RATIO 1.00 - 1.09

Driven Speed for Motor Speed of			Sheave Datum Diameters		V-Belt Number and Center Distance (other sizes may be available, see page 217)												
690 RPM	870 RPM	1160 RPM	Small Sheave	Large Sheave	Speed Ratio	DP/DX 120	DP/DX 128	DP/DX 144	DP/DX 158	DP/DX 162	DP/DX 173	DP/DX 180	DP/DX 195	DP/DX 210	DP/DX 225	DP/DX 240	DP/DX 255
690	870	1160	12.00	12.00	1.00	42.8	46.6	54.8	61.6	63.8	69.3	72.8	80.3	87.8	94.1	101.8	109.1
						0.9	0.9	0.9	0.9	0.9	1.0	1.0	1.0	1.0	1.0	1.0	1.0
690	870	1160	13.00	13.00	1.00	41.2	45.2	53.2	60.2	62.2	67.7	71.2	78.7	86.2	92.5	100.0	107.5
						0.9	0.9	0.9	0.9	0.9	1.0	1.0	1.0	1.0	1.0	1.0	1.0
690	870	1160	13.50	13.50	1.00	40.5	44.5	52.5	59.5	61.5	67.0	70.5	78.0	85.5	91.8	99.3	106.8
						0.9	0.9	0.9	0.9	0.9	1.0	1.0	1.0	1.0	1.0	1.0	1.0
690	870	1160	14.00	14.00	1.00	39.7	43.7	51.7	58.7	60.7	66.2	69.7	77.2	84.7	91.0	98.5	106.0
						0.9	0.9	0.9	0.9	0.9	1.0	1.0	1.0	1.0	1.0	1.0	1.0
690	870	1160	14.50	14.50	1.00	38.9	42.9	50.9	57.9	59.9	65.4	68.9	76.4	83.9	90.2	97.7	105.2
						0.9	0.9	0.9	0.9	0.9	1.0	1.0	1.0	1.0	1.0	1.0	1.0
690	870	1160	15.00	15.00	1.00	38.1	42.1	50.1	57.1	59.1	64.6	68.1	75.6	83.1	89.4	96.9	104.4
						0.9	0.9	0.9	0.9	0.9	1.0	1.0	1.0	1.0	1.0	1.0	1.0
690	870	1160	15.50	15.50	1.00	37.3	41.3	49.3	56.3	58.3	63.8	67.3	74.8	82.3	88.6	96.1	103.6
						0.9	0.9	0.9	0.9	0.9	1.0	1.0	1.0	1.0	1.0	1.0	1.0
690	870	1160	16.00	16.00	1.00	36.5	40.5	48.5	55.5	57.5	63.0	66.5	74.0	81.5	87.8	95.3	102.8
						0.9	0.9	0.9	0.9	0.9	1.0	1.0	1.0	1.0	1.0	1.0	1.0
690	870	1160	17.00	17.00	1.00	35.0	39.0	47.0	54.0	56.0	61.5	65.0	72.5	80.0	86.3	93.8	101.3
						0.9	0.9	0.9	0.9	0.9	1.0	1.0	1.0	1.0	1.0	1.0	1.0
690	870	1160	18.00	18.00	1.00	33.4	37.4	45.4	52.4	54.4	59.9	63.4	70.9	78.4	84.7	92.2	99.7
						0.9	0.9	0.9	0.9	0.9	1.0	1.0	1.0	1.0	1.0	1.0	1.0
690	870	1160	20.00	20.00	1.00	30.2	34.2	42.2	49.2	51.2	56.7	60.2	67.7	75.2	81.5	89.0	96.5
						0.9	0.9	0.9	0.9	0.9	1.0	1.0	1.0	1.0	1.0	1.0	1.0
690	870	1160	22.00	22.00	1.00	27.1	31.1	39.1	46.1	48.1	53.6	57.1	64.6	72.1	78.4	85.9	93.4
						0.9	0.9	0.9	0.9	0.9	1.0	1.0	1.0	1.0	1.0	1.0	1.0
669	844	1125	15.50	16.00	1.03	36.9	40.9	48.9	55.9	57.9	63.4	66.9	74.4	81.9	88.2	95.7	103.2
						0.9	0.9	0.9	0.9	0.9	1.0	1.0	1.0	1.0	1.0	1.0	1.0
669	843	1124	15.00	15.50	1.03	37.7	41.7	49.7	56.7	58.7	64.2	67.7	75.2	82.7	89.0	96.5	104.0
						0.9	0.9	0.9	0.9	0.9	1.0	1.0	1.0	1.0	1.0	1.0	1.0
668	842	1123	14.50	15.00	1.03	38.5	42.5	50.5	57.5	59.5	65.0	68.5	76.0	83.5	89.8	97.3	104.8
						0.9	0.9	0.9	0.9	0.9	1.0	1.0	1.0	1.0	1.0	1.0	1.0
667	841	1122	14.00	14.50	1.03	39.3	43.3	51.3	58.3	60.3	65.8	69.3	76.8	84.3	90.6	98.1	105.6
						0.9	0.9	0.9	0.9	0.9	1.0	1.0	1.0	1.0	1.0	1.0	1.0
666	840	1120	13.50	14.00	1.04	40.1	44.1	52.1	59.1	61.1	66.6	70.1	77.6	85.1	91.4	98.9	106.4
						0.9	0.9	0.9	0.9	0.9	1.0	1.0	1.0	1.0	1.0	1.0	1.0
666	839	1119	13.00	13.50	1.04	40.8	44.8	52.8	59.8	61.8	67.3	70.8	78.3	85.8	92.1	99.6	107.1
						0.9	0.9	0.9	0.9	0.9	1.0	1.0	1.0	1.0	1.0	1.0	1.0
653	823	1098	17.00	18.00	1.06	34.2	38.2	46.2	53.2	55.2	60.7	64.2	71.7	79.2	85.5	93.0	100.5
						0.9	0.9	0.9	0.9	0.9	1.0	1.0	1.0	1.0	1.0	1.0	1.0
651	821	1094	16.00	17.00	1.06	35.7	39.7	47.7	54.7	56.7	62.2	65.7	73.2	80.7	87.0	94.5	102.0
						0.9	0.9	0.9	0.9	0.9	1.0	1.0	1.0	1.0	1.0	1.0	1.0
648	818	1090	15.00	16.00	1.06	37.3	41.3	49.3	56.3	58.3	63.8	67.3	74.8	82.3	88.6	96.1	103.6
						0.9	0.9	0.9	0.9	0.9	1.0	1.0	1.0	1.0	1.0	1.0	1.0
647	816	1088	14.50	15.50	1.07	38.1	42.1	50.1	57.1	59.1	64.6	68.1	75.6	83.1	89.4	96.9	104.4
						0.9	0.9	0.9	0.9	0.9	1.0	1.0	1.0	1.0	1.0	1.0	1.0
646	814	1086	14.00	15.00	1.07	38.2	42.9	50.9	57.9	59.9	65.4	68.9	76.4	83.9	90.2	97.7	105.2
						0.9	0.9	0.9	0.9	0.9	1.0	1.0	1.0	1.0	1.0	1.0	1.0
644	812	1083	13.50	14.50	1.07	39.7	43.7	51.7	58.7	60.7	66.2	69.7	77.2	84.7	91.0	98.5	106.0
						0.9	0.9	0.9	0.9	0.9	1.0	1.0	1.0	1.0	1.0	1.0	1.0
643	810	1081	13.00	14.00	1.07	40.4	44.4	52.4	59.4	61.4	66.9	70.4	78.0	85.5	91.8	99.3	106.8
						0.9	0.9	0.9	0.9	0.9	1.0	1.0	1.0	1.0	1.0	1.0	1.0
639	806	1075	12.00	13.00	1.08	42.0	46.0	54.0	61.0	63.0	68.5	72.0	79.5	87.0	93.3	100.8	108.3
						0.9	0.9	0.9	0.9	0.9	1.0	1.0	1.0	1.0	1.0	1.0	1.0
634	799	1066	22.00	24.00	1.09	25.5	29.5	37.5	44.5	46.5	52.0	55.5	63.0	70.5	76.8	84.3	91.8
						0.9	0.9	0.9	0.9	0.9	1.0	1.0	1.0	1.0	1.0	1.0	1.0
631	796	1061	15.50	17.00	1.09	36.1	40.1	48.1	55.1	57.1	62.6	66.1	73.6	81.1	87.4	94.9	102.4
						0.9	0.9	0.9	0.9	0.9	1.0	1.0	1.0	1.0	1.0	1.0	1.0

⚠**WARNING** * = Sheave Rim Speed over 6,000 feet per minute - See Page 236

CLASSICAL SECTION PRE-ENGINEERED DRIVE SELECTION TABLES

DP, DX PRE-ENGINEERED TABLES — RATIO 1.00 - 1.09

V-Belt Number and Center Distance (Other sizes may be available, see page 217)														Sheave Datum Diameters		Rated HP per Belt (Includes Added HP for Speed Ratio) Super Blue Ribbon & Gold Label Cog-Belt (DP &DX) RPM of Small Sheave		
DP/DX 270	DP/DX 285	DP/DX 300	DP/DX 315	DP/DX 330	DP/DX 345	DP/DX 360	DP/DX 390	DP/DX 420	DP/DX 450	DP/DX 480	DP/DX 540	DP/DX 600	DP/DX 660	Small Sheave	Large Sheave	690 RPM	870 RPM	1160 RPM
116.6	124.1	132	139.1	146.6	154.1	161.6	176.6	191.8	206.6	221.6	251.6	281.6	311.6	12.00	12.00	21.13	24.56	28.43
1.0	1.0	1.0	1.0	1.0	1.1	1.1	1.1	1.1	1.1	1.1	1.1	1.1	1.1					
115.0	122.5	130.0	137.5	145.0	152.5	160.0	175.0	190.0	205.0	220.0	250.0	280.0	310.0	13.00	13.00	24.40	28.39	32.81
1.0	1.0	1.0	1.0	1.0	1.1	1.1	1.1	1.1	1.1	1.1	1.1	1.1	1.1					
114.3	121.8	129.3	136.8	144.3	151.8	159.3	174.3	189.3	204.3	219.3	249.3	279.3	309.3	13.50	13.50	26.02	30.26	34.92
1.0	1.0	1.0	1.0	1.0	1.1	1.1	1.1	1.1	1.1	1.1	1.1	1.1	1.1					
113.5	121.0	128.0	136.0	143.5	151.0	158.0	173.5	188.3	203.5	218.5	248.5	278.5	308.5	14.00	14.00	27.61	32.10	36.96
1.0	1.0	1.0	1.0	1.0	1.1	1.1	1.1	1.1	1.1	1.1	1.1	1.1	1.1					
112.7	120.2	127.7	135.2	142.7	150.2	157.7	172.7	187.7	202.7	217.7	247.7	277.7	307.7	14.50	14.50	29.19	33.92	38.93
1.0	1.0	1.0	1.0	1.0	1.1	1.1	1.1	1.1	1.1	1.1	1.1	1.1	1.1					
111.9	119.4	126.9	134.4	141.9	149.4	156.9	171.9	186.9	201.9	216.9	246.9	276.9	306.9	15.00	15.00	30.75	35.70	40.84
1.0	1.0	1.0	1.0	1.0	1.1	1.1	1.1	1.1	1.1	1.1	1.1	1.1	1.1					
111.1	118.6	126.1	133.6	141.1	148.6	156.1	171.1	186.1	201.1	216.1	246.1	276.1	306.1	15.50	15.50	32.30	37.45	42.68
1.0	1.0	1.0	1.0	1.0	1.1	1.1	1.1	1.1	1.1	1.1	1.1	1.1	1.1					
110.3	117.8	125.3	132.8	1403	147.8	155.3	170.3	185.3	200.3	215.3	245.3	275.3	305.3	16.00	16.00	33.82	39.16	44.46
1.0	1.0	1.0	1.0	1.0	1.1	1.1	1.1	1.1	1.1	1.1	1.1	1.1	1.1					
108.8	116.3	123.8	131.3	138.8	146.3	153.8	168.8	183.8	198.8	213.8	243.8	273.8	303.8	17.00	17.00	36.82	42.50	47.80
1.0	1.0	1.0	1.0	1.0	1.1	1.1	1.1	1.1	1.1	1.1	1.1	1.1	1.1					
107.2	114.7	122.2	129.7	137.2	144.7	152.2	167.2	182.2	197.2	212.2	242.2	272.2	302.2	18.00	18.00	39.74	45.70	50.84
1.0	1.0	1.0	1.0	1.0	1.1	1.1	1.1	1.1	1.1	1.1	1.1	1.1	1.1					
104.0	111.5	119.0	126.5	134.0	141.5	149.0	164.0	179.0	194.0	209.0	239.0	269.0	299.0	20.00	20.00	45.35	51.69	*
1.0	1.0	1.0	1.0	1.0	1.1	1.1	1.1	1.1	1.1	1.1	1.1	1.1	1.1					
100.9	108.4	115.9	123.4	130.9	138.4	145.9	160.9	175.9	190.9	205.9	235.9	265.9	295.9	22.00	22.00	50.64	57.07	*
1.0	1.0	1.0	1.0	1.0	1.1	1.1	1.1	1.1	1.1	1.1	1.1	1.1	1.1					
110.7	118.2	125.7	133.2	140.7	148.2	155.7	170.7	185.7	200.7	215.7	245.7	275.7	305.7	15.50	16.00	32.69	37.94	43.34
1.0	1.0	1.0	1.0	1.0	1.1	1.1	1.1	1.1	1.1	1.1	1.1	1.1	1.1					
111.5	119.0	126.5	134.0	141.5	149.0	156.5	171.5	186.5	201.5	216.5	246.5	276.5	306.5	15.00	15.50	31.16	36.20	41.52
1.0	1.0	1.0	1.0	1.0	1.1	1.1	1.1	1.1	1.1	1.1	1.1	1.1	1.1					
112.3	119.8	127.3	134.8	142.3	149.8	157.3	172.3	187.3	202.3	217.3	247.3	277.3	307.3	14.50	15.00	29.61	34.44	39.63
1.0	1.0	1.0	1.0	1.0	1.1	1.1	1.1	1.1	1.1	1.1	1.1	1.1	1.1					
113.1	120.6	128.1	135.6	143.1	150.6	158.1	173.1	188.1	203.1	218.1	248.1	278.1	308.1	14.00	14.50	28.04	32.64	37.67
1.0	1.0	1.0	1.0	1.0	1.1	1.1	1.1	1.1	1.1	1.1	1.1	1.1	1.1					
113.9	121.4	128.9	136.4	143.9	151.4	158.9	173.9	188.9	203.9	218.9	248.9	278.9	308.9	13.50	14.00	26.46	30.82	35.66
1.0	1.0	1.0	1.0	1.0	1.1	1.1	1.1	1.1	1.1	1.1	1.1	1.1	1.1					
114.6	122.1	129.6	137.1	144.6	152.1	159.6	174.6	189.6	204.6	219.6	249.6	279.6	309.6	13.00	13.50	24.86	28.96	33.58
1.0	1.0	1.0	1.0	1.0	1.1	1.1	1.1	1.1	1.1	1.1	1.1	1.1	1.1					
108.0	115.5	123.0	130.5	138.0	145.5	153.0	168.0	183.0	198.0	213.0	243.0	273.0	303.0	17.00	18.00	37.49	43.35	48.93
1.0	1.0	1.0	1.0	1.0	1.1	1.1	1.1	1.1	1.1	1.1	1.1	1.1	1.1					
109.5	117.0	124.5	132.0	139.5	147.0	154.5	169.5	184.5	199.5	214.5	244.5	274.5	304.5	16.00	17.00	34.53	40.05	45.65
1.0	1.0	1.0	1.0	1.0	1.1	1.1	1.1	1.1	1.1	1.1	1.1	1.1	1.1					
111.1	118.6	126.1	133.6	141.1	148.6	156.1	171.1	186.1	201.1	216.1	246.1	276.1	306.1	15.00	16.00	31.50	36.64	42.09
1.0	1.0	1.0	1.0	1.0	1.1	1.1	1.1	1.1	1.1	1.1	1.1	1.1	1.1					
111.9	119.4	126.9	134.4	141.9	149.4	156.9	171.9	186.9	201.9	216.9	246.9	276.9	306.9	14.50	15.50	29.96	34.88	40.22
1.0	1.0	1.0	1.0	1.0	1.1	1.1	1.1	1.1	1.1	1.1	1.1	1.1	1.1					
112.7	120.2	127.7	135.2	142.7	150.2	157.7	172.7	187.7	202.7	217.7	247.7	277.7	307.7	14.00	15.00	28.40	33.10	38.28
1.0	1.0	1.0	1.0	1.0	1.1	1.1	1.1	1.1	1.1	1.1	1.1	1.1	1.1					
113.5	121.0	128.5	136.0	143.5	151.0	158.5	173.5	188.5	203.5	218.5	248.5	278.5	308.5	13.50	14.50	26.83	31.28	36.28
1.0	1.0	1.0	1.0	1.0	1.1	1.1	1.1	1.1	1.1	1.1	1.1	1.1	1.1					
114.3	121.8	129.3	136.8	144.3	151.8	159.3	174.3	189.3	204.3	219.3	249.3	279.3	309.3	13.00	14.00	25.24	29.44	34.22
1.0	1.0	1.0	1.0	1.0	1.1	1.1	1.1	1.1	1.1	1.1	1.1	1.1	1.1					
115.8	123.3	130.8	138.3	145.8	153.3	160.8	175.8	190.8	205.8	220.8	250.8	280.8	310.8	12.00	13.00	22.02	25.68	29.93
1.0	1.0	1.0	1.0	1.0	1.1	1.1	1.1	1.1	1.1	1.1	1.1	1.1	1.1					
99.3	106.8	114.3	121.8	129.3	146.8	144.3	159.3	174.3	189.3	204.3	234.3	264.3	294.3	22.00	24.00	51.61	58.30	*
1.0	1.0	1.0	1.0	1.0	1.1	1.1	1.1	1.1	1.1	1.1	1.1	1.1	1.1					
109.9	117.4	124.9	132.4	139.9	147.4	154.9	169.9	184.9	199.9	214.9	244.9	274.9	304.9	15.50	17.00	33.31	38.72	44.38
1.0	1.0	1.0	1.0	1.0	1.1	1.1	1.1	1.1	1.1	1.1	1.1	1.1	1.1					

⚠ **WARNING** * = Sheave Rim Speed over 6,000 feet per minute - See Page 236

CLASSICAL SECTION PRE-ENGINEERED DRIVE SELECTION TABLES

DP, DX PRE-ENGINEERED TABLES RATIO 1.10 - 1.27

Driven Speed for Motor Speed of			Sheave Datum Diameters		V-Belt Number and Center Distance (other sizes may be available, see page 217)													
690 RPM	870 RPM	1160 RPM	Small Sheave	Large Sheave	Speed Ratio	DP/DX 120	DP/DX 128	DP/DX 144	DP/DX 158	DP/DX 162	DP/DX 173	DP/DX 180	DP/DX 195	DP/DX 210	DP/DX 225	DP/DX 240	DP/DX 255
629	793	1057	20.00	22.00	1.10	28.7	32.7	40.7	47.7	49.7	55.2	58.7	66.2	73.7	80.0	87.5	95.0
						0.9	0.9	0.9	0.9	0.9	1.0	1.0	1.0	1.0	1.0	1.0	1.0
628	791	1055	14.50	16.00	1.10	37.7	41.7	49.7	56.7	58.7	64.2	67.7	75.2	82.7	89.0	96.5	104.0
						0.9	0.9	0.9	0.9	0.9	1.0	1.0	1.0	1.0	1.0	1.0	1.0
626	789	1052	14.00	15.50	1.10	38.5	42.5	50.5	57.5	59.5	65.0	68.5	76.0	83.5	89.8	97.3	104.8
						0.9	0.9	0.9	0.9	0.9	1.0	1.0	1.0	1.0	1.0	1.0	1.0
624	786	1048	13.50	15.00	1.11	39.3	43.3	51.3	58.3	60.3	65.8	69.3	76.8	84.3	90.6	98.1	105.8
						0.9	0.9	0.9	0.9	0.9	1.0	1.0	1.0	1.0	1.0	1.0	1.0
623	786	1047	18.00	20.00	1.11	31.8	35.8	43.8	50.8	52.8	58.3	61.8	69.3	76.8	83.1	90.6	98.1
						0.9	0.9	0.9	0.9	0.9	1.0	1.0	1.0	1.0	1.0	1.0	1.0
621	784	1045	13.00	14.50	1.11	40.1	44.1	52.1	59.1	61.1	66.6	70.1	77.6	85.1	91.4	98.9	106.4
						0.9	0.9	0.9	0.9	0.9	1.0	1.0	1.0	1.0	1.0	1.0	1.0
617	777	1037	12.00	13.50	1.12	41.6	45.6	52.6	60.6	62.6	68.1	71.8	79.1	86.8	92.9	100.4	107.9
						0.9	0.9	0.9	0.9	0.9	1.0	1.0	1.0	1.0	1.0	1.0	1.0
616	776	1035	16.00	18.00	1.12	34.9	38.9	46.9	53.9	55.9	61.4	64.9	72.4	79.9	86.2	93.7	101.2
						0.9	0.9	0.9	0.9	0.9	1.0	1.0	1.0	1.0	1.0	1.0	1.0
612	771	1028	15.00	17.00	1.13	36.5	40.5	48.5	55.5	57.5	63.0	66.5	74.0	81.5	87.8	95.3	102.8
						0.9	0.9	0.9	0.9	0.9	1.0	1.0	1.0	1.0	1.0	1.0	1.0
607	765	1020	14.00	16.00	1.14	38.1	42.1	50.1	57.1	59.1	64.6	68.1	75.6	83.1	89.4	96.9	104.4
						0.9	0.9	0.9	0.9	0.9	1.0	1.0	1.0	1.0	1.0	1.0	1.0
604	762	1016	13.50	15.50	1.14	38.9	42.9	50.9	57.9	59.9	65.4	68.9	76.4	83.9	90.2	97.7	105.2
						0.9	0.9	0.9	0.9	0.9	1.0	1.0	1.0	1.0	1.0	1.0	1.0
602	758	1011	13.00	15.00	1.15	39.7	43.7	51.7	58.7	60.7	66.2	69.7	77.2	84.7	91.0	98.5	106.0
						0.9	0.9	0.9	0.9	0.9	1.0	1.0	1.0	1.0	1.0	1.0	1.0
597	753	1004	15.50	18.00	1.16	35.3	39.3	47.3	54.3	56.3	61.8	65.3	72.8	80.3	86.6	94.1	101.6
						0.9	0.9	0.9	0.9	0.9	1.0	1.0	1.0	1.0	1.0	1.0	1.0
595	751	1001	12.00	14.00	1.16	41.2	45.2	53.2	60.2	62.2	67.7	71.2	78.7	86.2	92.5	100.0	107.5
						0.9	0.9	0.9	0.9	0.9	1.0	1.0	1.0	1.0	1.0	1.0	1.0
592	746	995	14.50	17.00	1.17	36.9	40.9	48.9	55.9	57.9	63.4	66.9	74.4	81.9	88.2	95.7	103.2
						0.9	0.9	0.9	0.9	0.9	1.0	1.0	1.0	1.0	1.0	1.0	1.0
590	743	991	17.00	20.00	1.17	32.6	36.6	44.6	51.6	53.6	59.1	62.6	70.1	77.6	83.9	91.4	98.9
						0.9	0.9	0.9	0.9	0.9	1.0	1.0	1.0	1.0	1.0	1.0	1.0
586	739	985	13.50	16.00	1.18	38.5	42.5	50.5	57.5	59.5	65.0	68.5	76.0	83.5	89.8	97.3	104.8
						0.9	0.9	0.9	0.9	0.9	1.0	1.0	1.0	1.0	1.0	1.0	1.0
583	735	980	13.00	15.50	1.18	39.3	43.3	51.3	58.3	60.3	65.8	69.3	76.8	84.3	90.6	98.1	105.6
						0.9	0.9	0.9	0.9	0.9	1.0	1.0	1.0	1.0	1.0	1.0	1.0
579	730	973	15.00	18.00	1.19	35.7	39.7	47.7	54.7	56.7	62.2	65.7	73.2	80.7	87.0	94.5	102.0
						0.9	0.9	0.9	0.9	0.9	1.0	1.0	1.0	1.0	1.0	1.0	1.0
578	729	971	20.00	24.00	1.19	27.0	31.0	39.0	46.1	48.1	53.6	57.1	64.6	72.1	78.4	85.9	93.4
						0.9	0.9	0.9	0.9	0.9	0.9	1.0	1.0	1.0	1.0	1.0	1.0
576	726	968	12.00	14.50	1.20	40.8	44.8	52.8	59.8	61.8	67.3	70.8	78.3	85.8	92.1	99.6	107.1
						0.9	0.9	0.9	0.9	0.9	1.0	1.0	1.0	1.0	1.0	1.0	1.0
572	722	962	14.00	17.00	1.21	37.3	41.3	49.3	56.3	58.3	63.8	67.3	74.8	82.3	88.6	96.1	103.6
						0.9	0.9	0.9	0.9	0.9	1.0	1.0	1.0	1.0	1.0	1.0	1.0
568	716	955	18.00	22.00	1.22	30.2	34.2	42.2	49.2	51.2	56.7	60.2	67.7	75.2	81.5	89.0	96.5
						0.9	0.9	0.9	0.9	0.9	0.9	1.0	1.0	1.0	1.0	1.0	1.0
565	713	950	13.00	16.00	1.22	38.9	42.9	50.9	57.9	59.9	65.4	68.9	76.4	83.9	90.2	97.7	105.2
						0.9	0.9	0.9	0.9	0.9	1.0	1.0	1.0	1.0	1.0	1.0	1.0
565	712	950	22.00	27.00	1.22	-0.0	27.1	35.1	42.1	44.1	49.6	53.1	60.6	68.1	74.4	81.9	89.4
						-0.0	0.9	0.9	0.9	0.9	0.9	1.0	1.0	1.0	1.0	1.0	1.0
560	706	942	14.50	18.00	1.23	36.1	40.1	48.1	55.1	57.1	62.6	66.1	73.6	81.1	87.4	94.9	102.4
						0.9	0.9	0.9	0.9	0.9	0.9	1.0	1.0	1.0	1.0	1.0	1.0
557	703	937	12.00	15.00	1.24	40.4	44.4	52.4	59.4	61.4	66.9	70.4	77.9	85.4	91.7	99.2	106. 7
						0.9	0.9	0.9	0.9	0.9	1.0	1.0	1.0	1.0	1.0	1.0	1.0
556	701	935	16.00	20.00	1.24	33.3	37.3	45.3	52.3	54.3	59.8	63.4	70.9	78.4	84.7	92.2	99.7
						0.9	0.9	0.9	0.9	0.9	0.9	1.0	1.0	1.0	1.0	1.0	1.0
553	697	929	13.50	17.00	1.25	37.7	41.7	49.7	56.7	58.7	64.2	67.7	75.2	82.7	89.0	96.5	104.0
						0.9	0.9	0.9	0.9	0.9	0.9	1.0	1.0	1.0	1.0	1.0	1.0
542	683	911	14.00	18.00	1.27	36.5	40.5	48.5	55.5	57.5	63.0	66.5	74.0	81.5	87.8	95.3	102.8
						0.9	0.9	0.9	0.9	0.9	0.9	1.0	1.0	1.0	1.0	1.0	1.0

⚠ **WARNING** * = Sheave Rim Speed over 6,000 feet per minute - See Page 236

CLASSICAL SECTION PRE-ENGINEERED DRIVE SELECTION TABLES

DP, DX PRE-ENGINEERED TABLES — RATIO 1.10 - 1.27

V-Belt Number and Center Distance (Other sizes may be available, see page 217)														Sheave Datum Diameters		Rated HP per Belt (Includes Added HP for Speed Ratio) Super Blue Ribbon & Gold Label Cog-Belt (DP &DX) RPM of Small Sheave		
DP/DX 270	DP/DX 285	DP/DX 300	DP/DX 315	DP/DX 330	DP/DX 345	DP/DX 360	DP/DX 390	DP/DX 420	DP/DX 450	DP/DX 480	DP/DX 540	DP/DX 600	DP/DX 660	Small Sheave	Large Sheave	690 RPM	870 RPM	1160 RPM
102.5	110.0	117.5	125.0	132.5	140.0	147.5	162.5	177.5	192.5	207.5	237.5	267.5	297.5	20.00	22.00	48.40	53.00	*
1.0	1.0	1.0	1.0	1.0	1.1	1.1	1.1	1.1	1.1	1.1	1.1	1.1	1.1					
111.5	119.0	128.5	134.0	141.5	149.0	158.5	171.5	186.5	201.5	216.5	246.5	276.5	306.5	14.50	16.00	30.26	35.26	40.72
1.0	1.0	1.0	1.0	1.0	1.1	1.1	1.1	1.1	1.1	1.1	1.1	1.1	1.1					
112.3	119.8	127.3	134.8	142.3	149.8	157.3	172.3	187.3	202.3	217.3	247.3	277.3	307.3	14.00	15.50	28.70	33.48	38.79
1.0	1.0	1.0	1.0	1.0	1.1	1.1	1.1	1.1	1.1	1.1	1.1	1.1	1.1					
113.1	120.6	128.1	135.8	143.1	150.6	158.1	173.1	188.1	203.1	218.1	248.1	278.1	308.1	13.50	15.00	27.14	31.67	36.80
1.0	1.0	1.0	1.0	1.0	1.1	1.1	1.1	1.1	1.1	1.1	1.1	1.1	1.1					
105.6	113.1	120.6	128.1	135.6	143.1	150.6	165.6	180.6	195.6	210.6	240.6	270.6	300.6	18.00	20.00	40.87	47.13	52.74
1.0	1.0	1.0	1.0	1.0	1.1	1.1	1.1	1.1	1.1	1.1	1.1	1.1	1.1					
113.9	121.4	128.9	136.4	143.9	151.4	158.9	173.9	188.9	203.9	218.9	248.9	278.9	308.9	13.00	14.50	25.55	29.84	34.75
1.0	1.0	1.0	1.0	1.0	1.1	1.1	1.1	1.1	1.1	1.1	1.1	1.1	1.1					
115.4	122.9	130.4	137.9	145.4	152.9	160.4	175.4	190.4	205.4	220.4	250.4	280.4	310.4	12.00	13.50	22.34	26.09	30.48
1.0	1.0	1.0	1.0	1.0	1.1	1.1	1.1	1.1	1.1	1.1	1.1	1.1	1.1					
108.7	116.2	123.7	131.3	138.8	146.3	153.8	168.8	183.8	198.8	213.8	243.8	273.8	303.8	16.00	18.00	35.05	40.71	46.53
1.0	1.0	1.0	1.0	1.0	1.1	1.1	1.1	1.1	1.1	1.1	1.1	1.1	1.1					
110.3	117.8	125.3	132.8	140.3	147.8	155.3	170.3	185.3	200.3	215.3	245.3	275.3	305.3	15.00	17.00	32.04	37.32	43.00
1.0	1.0	1.0	1.0	1.0	1.1	1.1	1.1	1.1	1.1	1.1	1.1	1.1	1.1					
111.9	119.4	126.9	134.4	141.9	149.4	156.9	171.9	186.9	201.9	216.9	246.9	276.9	306.9	14.00	16.00	28.96	33.80	39.22
1.0	1.0	1.0	1.0	1.0	1.1	1.1	1.1	1.1	1.1	1.1	1.1	1.1	1.1					
112.7	120.2	127.7	135.2	142.7	150.2	157.7	172.7	187.7	202.7	217.7	247.7	277.7	307.7	13.50	15.50	27.40	32.00	37.24
1.0	1.0	1.0	1.0	1.0	1.1	1.1	1.1	1.1	1.1	1.1	1.1	1.1	1.1					
113.5	121.0	128.5	136.0	143.5	151.0	158.5	173.5	188.5	203.5	218.5	248.5	278.5	308.5	13.00	15.00	25.82	30.17	35.19
1.0	1.0	1.0	1.0	1.0	1.1	1.1	1.1	1.1	1.1	1.1	1.1	1.1	1.1					
109.1	116.6	124.1	131.6	139.1	146.6	154.1	169.1	184.1	199.1	214.1	244.1	274.1	304.1	15.50	18.00	33.76	39.30	45.15
1.0	1.0	1.0	1.0	1.0	1.1	1.1	1.1	1.1	1.1	1.1	1.1	1.1	1.1					
115.0	122.5	130.0	137.5	145.0	152.0	160.0	175.0	190.0	205.0	220.0	250.0	280.0	310.0	12.00	14.00	22.61	26.44	30.93
1.0	1.0	1.0	1.0	1.0	1.1	1.1	1.1	1.1	1.1	1.1	1.1	1.1	1.1					
110.7	118.2	125.7	133.2	140.7	148.2	155.7	170.7	185.7	200.7	215.7	245.7	275.7	305.7	14.50	17.00	30.72	35.85	41.50
1.0	1.0	1.0	1.0	1.0	1.1	1.1	1.1	1.1	1.1	1.1	1.1	1.1	1.1					
106.4	113.9	121.4	128.9	136.4	143.9	151.4	166.4	181.4	196.4	211.4	241.4	271.4	301.4	17.00	20.00	38.38	44.47	50.42
1.0	1.0	1.0	1.0	1.0	1.1	1.1	1.1	1.1	1.1	1.1	1.1	1.1	1.1					
112.3	119.8	127.3	134.8	142.3	149.8	157.3	172.3	187.3	202.3	217.3	247.3	277.3	307.3	13.50	16.00	27.62	32.28	37.60
1.0	1.0	1.0	1.0	1.0	1.1	1.1	1.1	1.1	1.1	1.1	1.1	1.1	1.1					
113.1	120.8	128.1	135.6	143.1	150.6	158.1	173.1	188.1	203.1	218.1	248.1	278.1	308.1	13.00	15.50	26.04	30.45	35.56
1.0	1.0	1.0	1.0	1.0	1.1	1.1	1.1	1.1	1.1	1.1	1.1	1.1	1.1					
109.5	117.0	124.5	132.0	139.5	147.0	154.5	169.5	184.5	199.5	214.5	244.5	274.5	304.5	15.00	18.00	32.43	37.82	43.67
1.0	1.0	1.0	1.0	1.0	1.1	1.1	1.1	1.1	1.1	1.1	1.1	1.1	1.1					
100.9	108.4	115.9	123.4	130.9	138.4	145.9	160.9	175.9	190.9	205.9	235.9	265.9	295.9	20.00	24.00	47.04	53.82	*
1.0	1.0	1.0	1.0	1.0	1.1	1.1	1.1	1.1	1.1	1.1	1.1	1.1	1.1					
114.6	122.1	129.8	137.1	144.6	152.1	159.6	174.6	189.6	204.6	219.6	249.6	279.6	309.6	12.00	14.50	22.84	26.72	31.31
1.0	1.0	1.0	1.0	1.0	1.1	1.1	1.1	1.1	1.1	1.1	1.1	1.1	1.1					
111.1	118.6	126.1	133.6	141.1	148.6	156.1	171.1	186.1	201.1	216.1	246.1	276.1	306.1	14.00	17.00	29.36	34.31	39.89
1.0	1.0	1.0	1.0	1.0	1.1	1.1	1.1	1.1	1.1	1.1	1.1	1.1	1.1					
104.0	111.5	119.0	126.5	134.0	141.5	149.0	164.0	179.0	194.0	209.0	239.0	269.0	299.0	18.00	22.00	41.53	47.97	53.86
1.0	1.0	1.0	1.0	1.0	1.1	1.1	1.1	1.1	1.1	1.1	1.1	1.1	1.1					
112.7	120.2	127.7	135.2	142.7	150.2	157.7	172.7	187.7	202.7	217.7	247.7	277.7	307.7	13.00	16.00	26.22	30.68	35.87
1.0	1.0	1.0	1.0	1.0	1.1	1.1	1.1	1.1	1.1	1.1	1.1	1.1	1.1					
96.9	104.4	111.9	119.4	126.9	134.4	142.0	157.0	172.0	187.0	202.0	232.0	262.0	292.0	22.00	27.00	52.46	59.37	*
1.0	1.0	1.0	1.0	1.0	1.1	1.1	1.1	1.1	1.1	1.1	1.1	1.1	1.1					
109.9	117.4	124.9	132.4	139.9	147.4	154.9	169.9	184.9	199.9	214.9	244.9	274.9	304.9	14.50	18.00	31.06	36.27	42.08
1.0	1.0	1.0	1.0	1.0	1.1	1.1	1.1	1.1	1.1	1.1	1.1	1.1	1.1					
114.2	121.7	129.2	136.7	144.2	151.7	159.2	174.2	189.2	204.2	219.2	249.2	279.2	309.2	12.00	15.00	23.02	26.95	31.62
1.0	1.0	1.0	1.0	1.0	1.1	1.1	1.1	1.1	1.1	1.1	1.1	1.1	1.1					
107.2	114.7	122.2	129.7	137.2	144.7	152.2	167.2	182.2	197.2	212.2	242.2	272.2	302.2	16.00	20.00	35.73	41.57	47.67
1.0	1.0	1.0	1.0	1.0	1.1	1.1	1.1	1.1	1.1	1.1	1.1	1.1	1.1					
111.5	119.0	126.5	134.0	141.5	149.0	156.5	171.5	186.5	201.5	216.5	246.5	276.5	306.5	13.50	17.00	27.96	32.71	38.18
1.0	1.0	1.0	1.0	1.0	1.1	1.1	1.1	1.1	1.1	1.1	1.1	1.1	1.1					
110.3	117.8	125.3	132.8	140.3	147.8	155.3	170.3	185.3	200.3	215.3	245.3	275.3	305.3	14.00	18.00	29.65	34.67	40.38
1.0	1.0	1.0	1.0	1.0	1.1	1.1	1.1	1.1	1.1	1.1	1.1	1.1	1.1					

⚠ **WARNING** * = Sheave Rim Speed over 6,000 feet per minute - See Page 236

CLASSICAL SECTION PRE-ENGINEERED DRIVE SELECTION TABLES

DP, DX PRE-ENGINEERED TABLES RATIO 1.28 - 1.58

Driven Speed for Motor Speed of			Sheave Datum Diameters		V-Belt Number and Center Distance (other sizes may be available, see page 217)													
690 RPM	870 RPM	1160 RPM	Small Sheave	Large Sheave	Speed Ratio	DP/DX 120	DP/DX 128	DP/DX 144	DP/DX 158	DP/DX 162	DP/DX 173	DP/DX 180	DP/DX 195	DP/DX 210	DP/DX 225	DP/DX 240	DP/DX 255
540	681	908	12.00	15.50	1.28	40.0	44.0	52.0	59.0	61.0	66.5	70.0	77.5	85.0	91.3	98.8	106.3
						0.9	0.9	0.9	0.9	0.9	0.9	1.0	1.0	1.0	1.0	1.0	1.0
539	680	907	15.50	20.00	1.28	33.7	37.7	45.7	52.7	54.7	60.2	63.7	71.2	78.7	85.0	92.5	100.1
						0.9	0.9	0.9	0.9	0.9	0.9	1.0	1.0	1.0	1.0	1.0	1.0
537	678	903	17.00	22.00	1.28	30.9	34.9	43.0	50.0	52.0	57.5	61.0	68.5	76.0	82.3	89.8	97.3
						0.9	0.9	0.9	0.9	0.9	0.9	1.0	1.0	1.0	1.0	1.0	1.0
533	672	896	13.00	17.00	1.29	38.0	42.0	50.1	57.1	59.1	64.6	68.1	75.6	83.1	89.4	96.9	104.4
						0.9	0.9	0.9	0.9	0.9	0.9	1.0	1.0	1.0	1.0	1.0	1.0
524	660	880	12.00	16.00	1.32	39.6	43.6	51.6	58.6	60.6	66.1	69.6	77.1	84.6	90.9	98.4	105.9
						0.9	0.9	0.9	0.9	0.9	0.9	1.0	1.0	1.0	1.0	1.0	1.0
523	660	879	13.50	18.00	1.32	36.8	40.9	48.9	55.9	57.9	63.4	66.9	74.4	81.9	88.2	95.7	103.2
						0.9	0.9	0.9	0.9	0.9	0.9	1.0	1.0	1.0	1.0	1.0	1.0
523	659	878	15.00	20.00	1.32	34.1	38.1	46.1	53.1	55.1	60.6	64.1	71.6	79.1	85.4	92.9	100.4
						0.9	0.9	0.9	0.9	0.9	0.9	1.0	1.0	1.0	1.0	1.0	1.0
522	658	877	18.00	24.00	1.32	28.5	32.5	40.6	47.6	49.6	55.1	58.6	66.1	73.6	79.9	87.4	94.9
						0.9	0.9	0.9	0.9	0.9	0.9	0.9	1.0	1.0	1.0	1.0	1.0
515	649	866	20.00	27.00	1.34	—	28.5	36.6	43.6	45.6	51.1	54.6	62.1	69.7	76.0	83.5	91.0
						—	0.9	0.9	0.9	0.9	0.9	0.9	1.0	1.0	1.0	1.0	1.0
507	639	852	16.00	22.00	1.36	31.7	35.7	43.7	50.7	52.7	58.2	61.7	69.2	76.8	83.1	90.6	98.1
						0.9	0.9	0.9	0.9	0.9	0.9	0.9	1.0	1.0	1.0	1.0	1.0
506	638	850	14.50	20.00	1.36	34.5	38.5	46.5	53.5	55.5	61.0	64.5	72.0	79.5	85.8	93.3	100.8
						0.9	0.9	0.9	0.9	0.9	0.9	1.0	1.0	1.0	1.0	1.0	1.0
505	636	848	13.00	18.00	1.37	37.2	41.2	49.2	56.3	58.3	63.8	67.3	74.8	82.3	88.6	96.1	103.6
						0.9	0.9	0.9	0.9	0.9	0.9	1.0	1.0	1.0	1.0	1.0	1.0
494	623	830	12.00	17.00	1.40	38.8	42.8	50.8	57.8	59.8	65.3	68.8	76.3	83.8	90.1	97.6	105.2
						0.9	0.9	0.9	0.9	0.9	0.9	1.0	1.0	1.0	1.0	1.0	1.0
494	622	830	17.00	24.00	1.40	29.2	33.3	41.3	48.3	50.3	55.8	59.4	66.9	74.4	80.7	88.2	95.7
						0.9	0.9	0.9	0.9	0.9	0.9	0.9	1.0	1.0	1.0	1.0	1.0
492	620	826	15.50	22.00	1.40	32.0	36.1	44.1	51.1	53.1	58.6	62.1	69.6	77.1	83.4	90.9	98.5
						0.9	0.9	0.9	0.9	0.9	0.9	0.9	1.0	1.0	1.0	1.0	1.0
489	617	822	14.00	20.00	1.41	34.8	38.8	46.9	53.9	55.9	61.4	64.9	72.4	79.9	86.2	93.7	101.2
						0.9	0.9	0.9	0.9	0.9	0.9	1.0	1.0	1.0	1.0	1.0	1.0
476	601	801	15.00	22.00	1.45	32.4	36.4	44.5	51.5	53.5	59.0	62.5	70.0	77.5	83.8	91.3	98.8
						0.9	0.9	0.9	0.9	0.9	0.9	0.9	1.0	1.0	1.0	1.0	1.0
472	595	794	13.50	20.00	1.46	35.2	39.2	47.2	54.2	56.3	61.8	65.3	72.8	80.3	86.6	94.1	101.6
						0.9	0.9	0.9	0.9	0.9	0.9	0.9	1.0	1.0	1.0	1.0	1.0
467	589	786	12.00	18.00	1.48	38.0	42.0	50.0	57.0	59.0	64.5	68.0	75.5	83.0	89.3	96.8	104.4
						0.9	0.9	0.9	0.9	0.9	0.9	1.0	1.0	1.0	1.0	1.0	1.0
466	587	783	16.00	24.00	1.48	30.0	34.0	42.1	49.1	51.1	56.6	60.1	67.6	75.1	81.4	89.0	96.5
						0.9	0.9	0.9	0.9	0.9	0.9	0.9	1.0	1.0	1.0	1.0	1.0
465	586	782	18.00	27.00	1.48	25.9	30.0	38.0	45.1	47.1	52.6	56.1	63.7	71.2	77.5	85.0	92.5
						0.9	0.9	0.9	0.9	0.9	0.9	0.9	1.0	1.0	1.0	1.0	1.0
464	585	780	22.00	33.0	1.49	—	—	30.0	37.1	39.1	44.6	48.1	55.7	63.2	69.5	77.1	84.6
						—	—	0.9	0.9	0.9	0.9	0.9	0.9	1.0	1.0	1.0	1.0
461	581	775	14.50	22.00	1.50	32.8	36.8	44.8	51.9	53.9	59.4	62.9	70.4	77.9	84.2	91.7	99.2
						0.9	0.9	0.9	0.9	0.9	0.9	0.9	1.0	1.0	1.0	1.0	1.0
456	574	766	13.00	20.00	1.51	35.6	39.6	47.6	54.6	56.6	62.1	65.6	73.2	80.7	87.0	94.5	102.0
						0.9	0.9	0.9	0.9	0.9	0.9	0.9	1.0	1.0	1.0	1.0	1.0
452	569	759	15.50	24.00	1.53	30.3	34.4	42.4	49.5	51.5	57.0	60.5	68.0	75.5	81.8	89.3	96.8
						0.9	0.9	0.9	0.9	0.9	0.9	0.9	1.0	1.0	1.0	1.0	1.0
446	562	749	14.00	22.00	1.55	33.1	37.2	45.2	52.2	54.2	59.7	63.3	70.8	78.3	84.6	92.1	99.6
						0.9	0.9	0.9	0.9	0.9	0.9	0.9	1.0	1.0	1.0	1.0	1.0
440	555	740	17.00	27.00	1.57	26.6	30.7	38.8	45.8	47.8	53.4	56.9	64.4	71.9	78.2	85.8	93.3
						0.9	0.9	0.9	0.9	0.9	0.9	0.9	1.0	1.0	1.0	1.0	1.0
438	552	736	15.00	24.00	1.58	30.7	34.7	42.8	49.8	51.8	57.4	60.9	68.4	75.9	82.2	89.7	97.2
						0.9	0.9	0.9	0.9	0.9	0.9	0.9	1.0	1.0	1.0	1.0	1.0

⚠ **WARNING** * = Sheave Rim Speed over 6,000 feet per minute - See Page 236

CLASSICAL SECTION PRE-ENGINEERED DRIVE SELECTION TABLES

DP, DX PRE-ENGINEERED TABLES — RATIO 1.28 - 1.58

V-Belt Number and Center Distance (Other sizes may be available, see page 217)														Sheave Datum Diameters		Rated HP per Belt (Includes Added HP for Speed Ratio) Super Blue Ribbon & Gold Label Cog-Belt (DP &DX) RPMof Small Sheave		
DP/DX 270	DP/DX 285	DP/DX 300	DP/DX 315	DP/DX 330	DP/DX 345	DP/DX 360	DP/DX 390	DP/DX 420	DP/DX 450	DP/DX 480	DP/DX 540	DP/DX 600	DP/DX 660	Small Sheave	Large Sheave	690 RPM	870 RPM	1160 RPM
113.8	121.3	128.8	136.3	143.8	151.3	158.8	173.9	188.9	203.9	218.9	248.9	278.9	308.9	12.00	15.50	23.18	27.15	31.88
1.0	1.0	1.0	1.0	1.0	1.1	1.1	1.1	1.1	1.1	1.1	1.1	1.1	1.1					
107.6	115.1	122.8	130.1	137.6	145.1	152.6	167.6	182.6	197.6	212.6	242.6	272.6	302.6	15.50	20.00	34.36	40.04	46.14
1.0	1.0	1.0	1.0	1.0	1.1	1.1	1.1	1.1	1.1	1.1	1.1	1.1	1.1					
104.8	112.3	119.8	127.3	134.8	142.3	149.8	164.8	179.8	194.8	209.8	239.8	269.8	299.8	17.00	22.00	38.89	45.12	51.28
1.0	1.0	1.0	1.0	1.0	1.1	1.1	1.1	1.1	1.1	1.1	1.1	1.1	1.1					
111.9	119.4	126.9	134.4	141.9	149.4	156.9	171.9	186.9	201.9	216.9	246.9	276.9	306.9	13.00	17.00	26.51	31.05	36.36
1.0	1.0	1.0	1.0	1.0	1.1	1.1	1.1	1.1	1.1	1.1	1.1	1.1	1.1					
113.4	120.9	128.5	136.0	143.5	151.0	158.5	173.5	188.5	203.5	218.5	248.5	278.5	308.5	12.00	16.00	23.31	27.31	32.10
1.0	1.0	1.0	1.0	1.0	1.1	1.1	1.1	1.1	1.1	1.1	1.1	1.1	1.1					
110.7	118.2	125.7	133.2	140.7	148.2	155.7	170.7	185.7	200.7	215.7	245.7	275.7	305.7	13.50	18.00	28.20	33.02	38.59
1.0	1.0	1.0	1.0	1.0	1.1	1.1	1.1	1.1	1.1	1.1	1.1	1.1	1.1					
107.9	115.4	122.9	130.4	137.9	145.4	152.9	167.9	183.0	198.0	213.0	243.0	273.0	303.0	15.00	20.00	39.94	38.46	44.52
1.0	1.0	1.0	1.0	1.0	1.1	1.1	1.1	1.1	1.1	1.1	1.1	1.1	1.1					
102.4	109.9	117.4	124.9	132.4	139.9	147.4	162.4	177.4	192.4	207.4	237.5	267.5	297.5	18.00	24.00	41.94	48.47	54.54
1.0	1.0	1.0	1.0	1.0	1.0	1.1	1.1	1.1	1.1	1.1	1.1	1.1	1.1					
98.5	106.0	113.5	121.0	128.5	136.0	143.5	158.5	173.5	188.5	203.5	233.5	263.5	293.5	20.00	27.00	47.60	54.52	*
1.0	1.0	1.0	1.0	1.0	1.0	1.1	1.1	1.1	1.1	1.1	1.1	1.1	1.1					
105.6	113.1	120.6	128.1	135.6	143.1	150.6	165.6	180.8	195.6	210.6	240.6	270.6	300.6	16.00	22.00	36.12	42.07	48.33
1.0	1.0	1.0	1.0	1.0	1.0	1.1	1.1	1.1	1.1	1.1	1.1	1.1	1.1					
108.3	115.8	123.3	130.8	138.3	145.8	153.3	168.3	183.3	198.3	213.3	243.3	273.3	303.3	14.50	20.00	31.50	36.83	42.81
1.0	1.0	1.0	1.0	1.0	1.1	1.1	1.1	1.1	1.1	1.1	1.1	1.1	1.1					
111.1	118.6	126.1	133.6	141.1	148.6	156.1	171.1	186.1	201.1	216.1	246.1	276.1	306.1	13.00	18.00	26.72	31.31	36.71
1.0	1.0	1.0	1.0	1.0	1.1	1.1	1.1	1.1	1.1	1.1	1.1	1.1	1.1					
112.7	120.2	127.7	135.2	142.7	150.2	157.7	172.7	187.7	202.7	217.7	247.7	277.7	307.7	12.00	17.00	23.51	27.56	32.44
1.0	1.0	1.0	1.0	1.0	1.1	1.1	1.1	1.1	1.1	1.1	1.1	1.1	1.1					
103.2	110.7	118.2	125.7	133.2	140.7	148.2	163.2	178.2	193.2	208.2	238.2	268.2	298.2	17.00	24.00	39.20	45.51	51.81
1.0	1.0	1.0	1.0	1.0	1.0	1.1	1.1	1.1	1.1	1.1	1.1	1.1	1.1					
106.1	113.5	121.0	128.5	136.0	143.5	151.0	166.0	181.0	196.0	211.0	214.0	271.0	310.0	15.50	22.00	34.69	40.47	46.72
1.0	1.0	1.0	1.0	1.0	1.0	1.1	1.1	1.1	1.1	1.1	1.1	1.1	1.1					
108.7	116.2	123.7	131.2	138.7	146.2	153.7	168.7	183.7	198.7	213.7	243.7	273.7	303.7	14.00	20.00	30.03	35.15	41.01
1.0	1.0	1.0	1.0	1.0	1.0	1.1	1.1	1.1	1.1	1.1	1.1	1.1	1.1					
106.3	113.8	121.3	128.9	136.4	143.9	151.4	166.4	181.4	196.4	211.4	241.4	271.4	301.4	15.00	22.00	33.24	38.83	45.02
1.0	1.0	1.0	1.0	1.0	1.0	1.1	1.1	1.1	1.1	1.1	1.1	1.1	1.1					
109.1	116.6	124.1	131.6	139.1	146.6	154.1	169.1	184.1	199.1	214.1	244.1	274.1	304.1	13.50	20.00	28.52	33.42	39.13
1.0	1.0	1.0	1.0	1.0	1.0	1.1	1.1	1.1	1.1	1.1	1.1	1.1	1.1					
111.9	119.4	126.9	134.4	141.9	149.4	156.9	171.9	186.9	201.9	216.9	246.9	276.9	306.9	12.00	18.00	23.66	27.75	32.68
1.0	1.0	1.0	1.0	1.0	1.0	1.1	1.1	1.1	1.1	1.1	1.1	1.1	1.1					
104.0	111.5	119.0	126.5	134.0	141.5	149.0	164.0	179.0	194.0	209.0	239.0	269.0	299.0	16.00	24.00	36.36	42.37	48.73
1.0	1.0	1.0	1.0	1.0	1.0	1.1	1.1	1.1	1.1	1.1	1.1	1.1	1.1					
100.0	107.5	115.0	122.5	130.0	137.5	145.0	160.1	175.1	190.1	205.1	235.1	265.1	295.1	18.00	27.00	42.28	48.91	55.12
1.0	1.0	1.0	1.0	1.0	1.0	1.1	1.1	1.1	1.1	1.1	1.1	1.1	1.1					
92.1	99.6	107.1	114.6	122.1	129.6	137.2	152.2	167.2	182.2	197.2	227.2	257.2	287.2	22.00	33.00	53.18	60.28	*
1.0	1.0	1.0	1.0	1.0	1.0	1.1	1.1	1.1	1.1	1.1	1.1	1.1	1.1					
106.7	114.2	121.7	129.2	136.7	144.2	151.7	166.7	181.8	196.8	211.8	241.8	271.8	301.8	14.50	22.00	31.75	37.14	43.24
1.0	1.0	1.0	1.0	1.0	1.0	1.1	1.1	1.1	1.1	1.1	1.1	1.1	1.1					
109.5	117.0	124.5	132.0	139.5	147.0	154.5	169.5	184.5	199.5	214.5	244.5	274.5	304.5	13.00	20.00	26.99	31.65	37.16
1.0	1.0	1.0	1.0	1.0	1.0	1.1	1.1	1.1	1.1	1.1	1.1	1.1	1.1					
104.3	111.9	119.4	126.9	134.4	141.9	149.4	164.4	179.4	194.4	209.4	239.4	269.4	299.4	15.50	24.00	34.90	40.73	47.06
1.0	1.0	1.0	1.0	1.0	1.0	1.1	1.1	1.1	1.1	1.1	1.1	1.1	1.1					
107.1	114.6	122.1	129.6	137.1	144.6	152.1	167.1	182.1	197.1	212.1	242.2	272.2	302.2	14.00	22.00	30.24	35.42	41.38
1.0	1.0	1.0	1.0	1.0	1.0	1.1	1.1	1.1	1.1	1.1	1.1	1.1	1.1					
100.8	108.3	115.8	123.3	130.8	138.3	145.8	160.8	175.8	190.8	205.8	235.8	265.9	295.9	17.00	27.00	39.47	45.85	52.26
1.0	1.0	1.0	1.0	1.0	1.0	1.1	1.1	1.1	1.1	1.1	1.1	1.1	1.1					
104.7	112.2	119.7	127.2	134.8	142.3	149.8	164.8	179.8	194.8	209.8	239.8	269.8	299.8	15.00	24.00	33.42	39.05	45.32
1.0	1.0	1.0	1.0	1.0	1.0	1.1	1.1	1.1	1.1	1.1	1.1	1.1	1.1					

⚠ **WARNING** * = Sheave Rim Speed over 6,000 feet per minute - See Page 236

CLASSICAL SECTION PRE-ENGINEERED DRIVE SELECTION TABLES

DP, DX PRE-ENGINEERED TABLES RATIO 1.60 - 2.31

Driven Speed for Motor Speed of			Sheave Datum Diameters		V-Belt Number and Center Distance (other sizes may be available, see page 217)													
690 RPM	870 RPM	1160 RPM	Small Sheave	Large Sheave	Speed Ratio	DP/DX 120	DP/DX 128	DP/DX 144	DP/DX 158	DP/DX 162	DP/DX 173	DP/DX 180	DP/DX 195	DP/DX 210	DP/DX 225	DP/DX 240	DP/DX 255
430	543	724	13.50	22.00	1.60	33.5	37.5	45.6	52.6	54.6	60.1	63.6	71.1	78.7	85.0	92.5	100.0
						0.9	0.9	0.9	0.9	0.9	0.9	0.9	1.0	1.0	1.0	1.0	1.0
424	534	712	14.50	24.00	1.63	31.1	35.1	43.2	50.2	52.2	57.7	61.2	68.8	76.3	82.6	90.1	97.6
						0.9	0.9	0.9	0.9	0.9	0.9	0.9	1.0	1.0	1.0	1.0	1.0
423	533	711	20.00	33.00	1.63	—	—	31.4	38.5	40.5	46.1	49.6	57.2	64.7	71.0	78.6	86.1
						—	—	0.9	0.9	0.9	0.9	0.9	0.9	1.0	1.0	1.0	1.0
422	532	710	12.00	20.00	1.63	36.3	40.3	48.4	55.4	57.4	62.9	66.4	73.9	81.4	87.7	95.2	102.7
						0.9	0.9	0.9	0.9	0.9	0.9	0.9	1.0	1.0	1.0	1.0	1.0
415	524	698	13.00	22.00	1.66	33.9	37.9	45.9	53.0	55.0	60.5	64.0	71.5	79.0	85.3	92.9	100.4
						0.9	0.9	0.9	0.9	0.9	0.9	0.9	1.0	1.0	1.0	1.0	1.0
415	523	698	16.00	27.00	1.66	27.3	31.4	39.5	46.6	48.6	54.1	57.6	65.2	72.7	79.0	86.5	94.0
						0.9	0.9	0.9	0.9	0.9	0.9	0.9	1.0	1.0	1.0	1.0	1.0
410	516	688	14.00	24.00	1.68	31.4	35.5	43.5	50.6	52.6	58.1	61.6	69.1	76.6	83.0	90.5	98.0
						0.9	0.9	0.9	0.9	0.9	0.9	0.9	1.0	1.0	1.0	1.0	1.0
403	508	677	15.50	27.00	1.71	27.7	31.8	39.9	46.9	48.9	54.5	58.0	65.5	73.1	79.4	86.9	94.4
						0.9	0.9	0.9	0.9	0.9	0.9	0.9	1.0	1.0	1.0	1.0	1.0
395	499	665	13.50	24.00	1.74	31.8	35.8	43.9	50.9	52.9	58.5	62.0	69.5	77.0	83.3	90.9	98.4
						0.9	0.9	0.9	0.9	0.9	0.9	0.9	1.0	1.0	1.0	1.0	1.0
390	492	656	15.00	27.00	1.77	28.0	32.1	40.2	47.3	49.3	54.8	58.4	65.9	73.4	79.7	87.3	94.8
						0.9	0.9	0.9	0.9	0.9	0.9	0.9	0.9	1.0	1.0	1.0	1.0
385	485	647	12.00	22.00	1.79	34.6	38.6	46.7	53.7	55.7	61.2	64.8	72.3	79.8	86.1	93.6	101.1
						0.9	0.9	0.9	0.9	0.9	0.9	0.9	1.0	1.0	1.0	1.0	1.0
384	484	646	22.00	40.00	1.80	—	—	—	—	—	38.4	42.0	49.6	57.3	63.6	71.2	78.7
						—	—	—	—	—	0.9	0.9	0.9	0.9	1.0	1.0	1.0
382	482	642	18.00	33.00	1.81	—	—	32.7	39.9	41.9	47.5	51.1	58.6	66.2	72.5	80.1	87.6
						—	—	0.9	0.9	0.9	0.9	0.9	0.9	1.0	1.0	1.0	1.0
381	481	641	13.00	24.00	1.81	32.1	36.2	44.34	51.3	53.3	58.8	62.4	69.9	77.4	83.7	91.2	98.7
						0.9	0.9	0.9	0.9	0.9	0.9	0.9	1.0	1.0	1.0	1.0	1.0
378	476	635	14.50	27.00	1.83	28.4	32.5	40.6	47.7	49.7	55.2	58.7	66.3	73.8	80.1	87.6	95.2
						0.9	0.9	0.9	0.9	0.9	0.9	0.9	0.9	1.0	1.0	1.0	1.0
385	460	614	14.00	27.00	1.89	28.7	32.8	40.9	48.0	50.0	55.6	59.1	66.6	74.2	80.5	88.0	95.5
						0.8	0.9	0.9	0.9	0.9	0.9	0.9	0.9	1.0	1.0	1.0	1.0
361	456	608	17.00	33.00	1.91	—	—	33.4	40.6	42.6	48.2	51.8	59.3	66.9	73.3	80.8	88.3
						—	—	0.9	0.9	0.9	0.9	0.9	0.9	1.0	1.0	1.0	1.0
353	446	594	12.00	24.00	1.95	32.8	36.9	45.0	52.0	54.1	59.6	63.1	70.6	78.2	84.5	92.0	99.5
						0.9	0.9	0.9	0.9	0.9	0.9	0.9	1.0	1.0	1.0	1.0	1.0
353	444	593	13.50	27.00	1.96	29.1	33.2	41.3	48.3	50.4	55.9	59.5	67.0	74.5	80.9	88.4	95.9
						0.9	0.9	0.9	0.9	0.9	0.9	0.9	0.9	1.0	1.0	1.0	1.0
350	441	589	20.00	40.00	1.97	—	—	—	—	34.1	39.8	43.4	51.1	58.7	65.1	72.6	80.2
						—	—	—	—	0.9	0.9	0.9	0.9	0.9	1.0	1.0	1.0
341	430	573	16.00	33.00	2.02	—	—	34.1	41.3	43.3	48.9	52.5	60.1	67.6	74.0	81.5	89.1
						—	—	0.9	0.9	0.9	0.9	0.9	0.9	1.0	1.0	1.0	1.0
340	429	572	13.00	27.00	2.03	29.4	33.5	41.7	48.7	50.8	56.3	59.8	67.4	74.9	81.2	88.8	96.3
						0.9	0.9	0.9	0.9	0.9	0.9	0.9	0.9	1.0	1.0	1.0	1.0
331	417	556	15.50	33.00	2.09	—	—	34.5	41.6	43.7	49.3	52.8	60.4	68.0	74.4	81.9	89.4
						—	—	0.9	0.9	0.9	0.9	0.9	0.9	0.9	1.0	1.0	1.0
321	405	539	22.00	48.00	2.15	—	—	—	—	—	—	—	42.2	50.0	56.5	64.2	71.8
						—	—	—	—	—	—	—	0.9	0.9	0.9	0.9	1.0
320	404	539	15.00	33.00	2.15	—	26.4	34.8	42.0	44.0	49.6	53.2	60.8	68.4	74.7	82.3	89.8
						—	0.8	0.9	0.9	0.9	0.9	0.9	0.9	0.9	1.0	1.0	1.0
316	399	531	18.00	40.00	2.18	—	—	—	33.3	35.4	41.1	44.8	52.5	60.1	66.5	74.1	81.7
						—	—	—	0.8	0.9	0.9	0.9	0.9	0.9	0.9	1.0	1.0
315	397	530	12.00	27.00	2.19	30.1	34.2	42.4	49.5	51.5	57.0	60.6	68.1	75.7	82.0	89.5	97.0
						0.9	0.9	0.9	0.9	0.9	0.9	0.9	0.9	1.0	1.0	1.0	1.0
310	391	521	14.50	33.00	2.23	—	26.8	35.1	42.3	44.4	50.0	53.6	61.2	68.7	75.1	82.6	90.2
						—	0.9	0.9	0.9	0.9	0.9	0.9	0.9	0.9	1.0	1.0	1.0
300	378	504	14.00	33.00	2.30	—	27.1	35.5	42.7	44.7	50.3	53.9	61.5	69.1	75.4	83.0	90.5
						—	0.8	0.9	0.9	0.9	0.9	0.9	0.9	0.9	1.0	1.0	1.0
299	377	503	17.00	40.00	2.31	—	—	—	33.9	36.1	41.8	45.4	53.1	60.8	67.2	74.8	82.4
						—	—	—	0.8	0.9	0.9	0.9	0.9	0.9	0.9	1.0	1.0

⚠**WARNING** * = Sheave Rim Speed over 6,000 feet per minute - See Page 236

CLASSICAL SECTION PRE-ENGINEERED DRIVE SELECTION TABLES

DP, DX PRE-ENGINEERED TABLES — RATIO 1.60 - 2.31

V-Belt Number and Center Distance (Other sizes may be available, see page 217)														Sheave Datum Diameters		Rated HP per Belt (Includes Added HP for Speed Ratio) Super Blue Ribbon & Gold Label Cog-Belt (DP &DX) RPM of Small Sheave		
DP/DX 270	DP/DX 285	DP/DX 300	DP/DX 315	DP/DX 330	DP/DX 345	DP/DX 360	DP/DX 390	DP/DX 420	DP/DX 450	DP/DX 480	DP/DX 540	DP/DX 600	DP/DX 660	Small Sheave	Large Sheave	690 RPM	870 RPM	1160 RPM
107.5	115.0	122.5	130.0	137.5	145.0	152.5	167.5	182.5	197.5	212.5	242.5	272.5	302.5	13.50	22.00	28.71	33.65	39.44
1.0	1.0	1.0	1.0	1.0	1.0	1.1	1.1	1.1	1.1	1.1	1.1	1.1	1.1					
105.1	112.6	120.1	127.6	135.1	142.6	150.1	165.2	180.2	195.2	210.2	240.2	270.2	300.2	14.50	24.00	31.91	37.34	43.50
1.0	1.0	1.0	1.0	1.0	1.0	1.1	1.1	1.1	1.1	1.1	1.1	1.1	1.1					
93.6	101.1	108.6	116.1	123.7	131.2	138.7	153.7	168.7	183.7	198.7	228.7	258.7	288.8	20.00	33.00	48.07	55.11	*
1.0	1.0	1.0	1.0	1.0	1.0	1.0	1.1	1.1	1.1	1.1	1.1	1.1	1.1					
110.3	117.8	125.3	132.8	140.3	147.8	155.3	170.3	185.3	200.3	215.3	245.3	275.3	305.3	12.00	20.00	23.85	27.99	33.00
1.0	1.0	1.0	1.0	1.0	1.0	1.1	1.1	1.1	1.1	1.1	1.1	1.1	1.1					
107.9	115.4	122.9	130.4	137.9	145.4	152.9	167.9	182.9	197.9	212.9	242.9	272.9	302.9	13.00	22.00	27.15	31.85	37.43
1.0	1.0	1.0	1.0	1.0	1.0	1.1	1.1	1.1	1.1	1.1	1.1	1.1	1.1					
101.5	109.0	116.6	124.1	131.6	139.1	146.6	161.6	176.6	191.6	206.6	236.6	266.6	296.6	16.00	27.00	36.57	42.62	49.07
1.0	1.0	1.0	1.0	1.0	1.0	1.1	1.1	1.1	1.1	1.1	1.1	1.1	1.1					
105.5	113.0	120.5	128.0	135.5	143.0	150.5	165.5	180.5	195.5	210.6	240.6	270.6	300.6	14.00	24.00	30.38	35.59	41.60
1.0	1.0	1.0	1.0	1.0	1.0	1.1	1.1	1.1	1.1	1.1	1.1	1.1	1.1					
101.9	109.4	116.9	124.4	132.0	139.5	147.0	162.0	177.0	192.0	207.0	237.0	267.0	297.0	15.50	27.00	35.08	40.96	47.37
1.0	1.0	1.0	1.0	1.0	1.0	1.1	1.1	1.1	1.1	1.1	1.1	1.1	1.1					
105.9	113.4	120.9	128.4	135.9	143.4	150.9	165.9	180.9	195.9	210.9	240.9	271.0	301.0	13.50	24.00	28.82	33.80	39.63
1.0	1.0	1.0	1.0	1.0	1.0	1.1	1.1	1.1	1.1	1.1	1.1	1.1	1.1					
102.3	109.8	117.3	124.8	132.3	139.8	147.3	162.4	177.4	192.4	207.4	237.4	267.4	297.4	15.00	27.00	33.57	39.25	45.58
1.0	1.0	1.0	1.0	1.0	1.0	1.1	1.1	1.1	1.1	1.1	1.1	1.1	1.1					
108.6	116.1	123.7	131.2	138.7	146.2	153.7	168.7	183.7	198.7	213.7	243.7	273.7	303.7	12.00	22.00	23.96	28.13	33.19
1.0	1.0	1.0	1.0	1.0	1.0	1.1	1.1	1.1	1.1	1.1	1.1	1.1	1.1					
86.3	93.8	101.4	108.9	116.4	123.9	131.5	146.5	161.5	176.5	191.6	221.6	251.6	281.6	22.00	40.00	53.47	60.65	*
1.0	1.0	1.0	1.0	1.0	1.0	1.0	1.1	1.1	1.1	1.1	1.1	1.1	1.1					
95.1	102.6	110.1	117.7	125.2	132.7	140.2	155.2	170.2	185.3	200.3	230.3	260.3	290.3	18.00	33.00	42.58	49.29	55.62
1.0	1.0	1.0	1.0	1.0	1.0	1.0	1.1	1.1	1.1	1.1	1.1	1.1	1.1					
106.3	113.8	121.3	128.8	136.3	143.8	151.3	166.3	181.3	196.3	211.3	241.3	271.3	301.3	13.00	24.00	27.25	31.97	37.59
1.0	1.0	1.0	1.0	1.0	1.0	1.1	1.1	1.1	1.1	1.1	1.1	1.1	1.1					
102.7	110.2	117.7	125.2	132.7	140.2	147.7	162.7	177.8	192.8	207.8	237.8	267.8	297.8	14.50	27.00	32.04	37.51	43.73
1.0	1.0	1.0	1.0	1.0	1.0	1.1	1.1	1.1	1.1	1.1	1.1	1.1	1.1					
103.1	110.6	118.1	125.6	133.1	140.6	148.1	163.1	178.1	193.1	208.2	238.2	268.2	298.2	14.00	27.00	30.49	35.74	41.80
1.0	1.0	1.0	1.0	1.0	1.0	1.1	1.1	1.1	1.1	1.1	1.1	1.1	1.1					
95.9	103.4	110.9	118.4	125.9	133.4	141.0	156.0	171.0	186.0	201.0	231.0	261.1	291.1	17.00	33.00	39.71	46.14	52.65
1.0	1.0	1.0	1.0	1.0	1.0	1.0	1.1	1.1	1.1	1.1	1.1	1.1	1.1					
107.0	114.5	122.0	129.5	137.1	144.6	142.1	167.1	182.1	197.1	212.1	242.1	272.1	302.1	12.00	24.00	24.03	28.22	33.31
1.0	1.0	1.0	1.0	1.0	1.0	1.1	1.1	1.1	1.1	1.1	1.1	1.1	1.1					
103.4	110.9	118.5	126.0	133.5	141.0	148.5	163.5	178.5	193.5	208.5	238.6	268.6	298.6	13.50	27.00	28.92	33.93	39.80
1.0	1.0	1.0	1.0	1.0	1.0	1.0	1.1	1.1	1.1	1.1	1.1	1.1	1.1					
87.8	95.3	102.8	110.4	117.9	125.4	133.0	148.0	163.0	178.1	193.1	223.1	253.1	283.2	20.00	40.00	48.26	55.36	*
1.0	1.0	1.0	1.0	1.0	1.0	1.0	1.1	1.1	1.1	1.1	1.1	1.1	1.1					
96.6	104.1	111.6	119.2	126.7	134.2	141.7	156.7	171.8	186.8	201.8	231.8	261.8	291.8	16.00	33.00	36.75	42.86	49.38
1.0	1.0	1.0	1.0	1.0	1.0	1.0	1.1	1.1	1.1	1.1	1.1	1.1	1.1					
103.8	111.3	118.8	126.3	133.9	141.4	148.9	163.9	178.9	193.9	208.9	238.9	269.0	299.0	13.00	27.00	27.34	32.09	37.74
1.0	1.0	1.0	1.0	1.0	1.0	1.0	1.1	1.1	1.1	1.1	1.1	1.1	1.1					
97.0	104.5	112.0	119.5	127.1	134.6	142.1	157.1	172.1	187.2	202.2	232.2	262.2	292.2	15.50	33.00	35.24	41.16	47.64
1.0	1.0	1.0	1.0	1.0	1.0	1.0	1.1	1.1	1.1	1.1	1.1	1.1	1.1					
79.4	87.0	94.6	102.2	109.7	117.3	124.8	139.9	154.9	170.0	185.0	215.1	245.1	275.2	22.00	48.00	53.60	60.81	*
1.0	1.0	1.0	1.0	1.0	1.0	1.0	1.0	1.1	1.1	1.1	1.1	1.1	1.1					
97.3	104.9	112.4	119.9	127.4	135.0	142.5	157.5	172.5	187.5	202.6	232.6	262.6	292.6	15.00	33.00	33.72	39.43	45.82
1.0	1.0	1.0	1.0	1.0	1.0	1.0	1.1	1.1	1.1	1.1	1.1	1.1	1.1					
89.2	96.8	104.3	111.9	119.4	126.9	134.5	149.5	164.5	179.6	194.6	224.6	254.7	284.7	18.00	40.00	42.71	49.45	55.84
1.0	1.0	1.0	1.0	1.0	1.0	1.0	1.1	1.1	1.1	1.1	1.1	1.1	1.1					
104.6	112.1	119.6	127.1	134.6	142.1	149.6	164.7	179.7	194.7	209.7	239.7	269.7	299.7	12.00	27.00	24.10	28.31	33.43
1.0	1.0	1.0	1.0	1.0	1.0	1.0	1.1	1.1	1.1	1.1	1.1	1.1	1.1					
97.7	105.2	112.8	120.3	127.8	135.3	142.9	157.9	172.9	187.9	202.9	233.0	263.0	293.0	14.50	33.00	32.17	37.67	43.94
1.0	1.0	1.0	1.0	1.0	1.0	1.0	1.1	1.1	1.1	1.1	1.1	1.1	1.1					
98.1	105.6	113.1	120.7	128.2	135.7	143.2	158.3	173.3	188.3	203.3	233.4	263.4	293.4	14.00	33.00	30.61	35.88	41.99
1.0	1.0	1.0	1.0	1.0	1.0	1.0	1.1	1.1	1.1	1.1	1.1	1.1	1.1					
90.0	97.5	105.1	112.6	120.1	127.7	135.2	150.2	165.3	180.3	195.4	225.4	255.4	285.5	17.00	40.00	39.81	46.28	52.83
1.0	1.0	1.0	1.0	1.0	1.0	1.0	1.1	1.1	1.1	1.1	1.1	1.1	1.1					

⚠ **WARNING** * = Sheave Rim Speed over 6,000 feet per minute - See Page 236

CLASSICAL SECTION PRE-ENGINEERED DRIVE SELECTION TABLES

DP, DX PRE-ENGINEERED TABLES RATIO 2.36 - 4.65

Driven Speed for Motor Speed of			Sheave Datum Diameters		V-Belt Number and Center Distance (other sizes may be available, see page 217)													
690 RPM	870 RPM	1160 RPM	Small Sheave	Large Sheave	Speed Ratio	DP/DX 120	DP/DX 128	DP/DX 144	DP/DX 158	DP/DX 162	DP/DX 173	DP/DX 180	DP/DX 195	DP/DX 210	DP/DX 225	DP/DX 240	DP/DX 255
292	369	492	20.00	48.00	2.36	—	—	—	—	—	—	—	43.5	51.3	57.9	65.6	73.2
						—	—	—	—	—	—	—	0.9	0.9	0.9	0.9	1.0
290	365	487	13.50	33.00	2.38	—	27.4	35.8	43.0	45.1	50.7	54.3	61.9	69.5	75.8	83.4	90.9
						—	0.8	0.9	0.9	0.9	0.9	0.9	0.9	0.9	1.0	1.0	1.0
282	356	474	16.00	40.00	2.45	—	—	—	34.6	36.7	42.5	46.1	53.8	61.5	67.9	75.5	83.1
						—	—	—	0.8	0.9	0.9	0.9	0.9	0.9	0.9	1.0	1.0
279	352	470	13.00	33.00	2.47	—	27.7	36.1	43.4	45.4	51.0	54.6	62.2	69.8	76.2	83.7	91.3
						—	0.8	0.9	0.9	0.9	0.9	0.9	0.9	0.9	1.0	1.0	1.0
274	345	460	15.50	40.00	2.52	—	—	—	34.9	37.0	42.8	46.5	54.2	61.9	68.3	75.9	83.5
						—	—	—	0.8	0.8	0.9	0.9	0.9	0.9	0.9	1.0	1.0
266	336	447	22.00	58.00	2.59	—	—	—	—	—	—	—	—	—	46.7	54.7	62.5
						—	—	—	—	—	—	—	—	—	0.9	0.9	0.9
265	334	446	15.00	40.00	2.60	—	—	—	35.2	37.4	43.2	46.8	54.5	62.2	68.6	76.2	83.8
						—	—	—	0.8	0.8	0.9	0.9	0.9	0.9	0.9	1.0	1.0
264	333	444	18.00	48.00	2.61	—	—	—	—	—	—	36.8	44.8	52.7	59.2	66.9	74.6
						—	—	—	—	—	—	0.8	0.9	0.9	0.9	0.9	1.0
259	326	435	12.00	33.00	2.67	—	28.4	36.8	44.1	46.1	51.7	55.3	62.9	70.5	76.9	84.5	92.0
						—	0.8	0.9	0.9	0.9	0.9	0.9	0.9	0.9	1.0	1.0	1.0
257	324	431	14.50	40.00	2.69	—	—	—	35.6	37.7	43.5	47.1	54.9	62.8	69.0	76.6	84.2
						—	—	—	0.8	0.8	0.9	0.9	0.9	0.9	0.9	1.0	1.0
250	315	420	17.00	48.00	2.76	—	—	—	—	—	—	37.4	45.5	53.4	59.9	67.6	75.3
						—	—	—	—	—	—	0.8	0.9	0.9	0.9	0.9	1.0
248	313	417	14.00	40.00	2.78	—	—	—	35.9	38.0	43.8	47.5	55.2	62.9	69.3	76.9	84.5
						—	—	—	0.8	0.8	0.9	0.9	0.9	0.9	0.9	1.0	1.0
243	306	408	20.00	58.00	2.84	—	—	—	—	—	—	—	—	—	47.9	56.0	63.9
						—	—	—	—	—	—	—	—	—	0.9	0.9	0.9
240	302	403	13.50	40.00	2.88	—	—	—	36.2	38.3	44.2	47.8	55.6	63.3	69.7	77.3	84.9
						—	—	—	0.8	0.8	0.9	0.9	0.9	0.9	0.9	1.0	1.0
236	297	396	16.00	48.00	2.93	—	—	—	—	—	34.1	38.0	46.1	54.0	60.6	68.3	76.0
						—	—	—	—	—	0.8	0.8	0.9	0.9	0.9	0.9	1.0
231	291	389	13.00	40.00	2.99	—	—	28.9	36.5	38.7	44.5	48.1	55.9	63.6	70.0	77.7	85.3
						—	—	0.8	0.8	0.8	0.9	0.9	0.9	0.9	0.9	1.0	1.0
229	288	384	15.50	48.00	3.02	—	—	—	—	—	34.5	38.3	46.4	54.4	60.9	68.7	76.4
						—	—	—	—	—	0.8	0.8	0.9	0.9	0.9	0.9	0.9
221	279	372	15.00	48.00	3.12	—	—	—	—	—	34.8	38.7	46.8	54.7	61.3	69.0	76.7
						—	—	—	—	—	0.8	0.8	0.9	0.9	0.9	0.9	0.9
219	276	368	18.00	58.00	3.15	—	—	—	—	—	—	—	—	42.2	49.2	57.3	65.2
						—	—	—	—	—	—	—	—	0.8	0.9	0.9	0.9
214	270	360	14.50	48.00	3.22	—	—	—	—	—	35.1	39.0	47.1	55.0	61.6	69.3	77.0
						—	—	—	—	—	0.8	0.8	0.9	0.9	0.9	0.9	0.9
214	270	360	12.00	40.00	3.22	—	—	29.5	37.2	39.3	45.1	48.8	56.6	64.3	70.7	78.4	86.0
						—	—	0.8	0.8	0.8	0.9	0.9	0.9	0.9	0.9	1.0	1.0
207	261	348	14.00	48.00	3.33	—	—	—	—	—	35.4	39.3	47.4	55.4	61.9	69.7	77.4
						—	—	—	—	—	0.8	0.8	0.9	0.9	0.9	0.9	0.9
207	261	348	17.00	58.00	3.33	—	—	—	—	—	—	—	—	42.8	49.8	57.9	65.9
						—	—	—	—	—	—	—	—	0.8	0.9	0.9	0.9
200	252	337	13.50	48.00	3.45	—	—	—	—	—	35.7	39.6	47.7	55.7	62.3	70.0	77.7
						—	—	—	—	—	0.8	0.8	0.9	0.9	0.9	0.9	0.9
195	246	329	16.00	58.00	3.53	—	—	—	—	—	—	—	—	43.5	50.5	58.5	66.5
						—	—	—	—	—	—	—	—	0.8	0.9	0.9	0.9
193	243	325	13.00	48.00	3.57	—	—	—	—	—	36.0	39.9	48.1	56.0	62.6	70.4	78.1
						—	—	—	—	—	0.8	0.8	0.9	0.9	0.9	0.9	0.9
190	239	319	15.50	58.00	3.64	—	—	—	—	—	—	—	—	43.8	50.8	58.9	66.9
						—	—	—	—	—	—	—	—	0.8	0.9	0.9	0.9
184	232	309	15.00	58.00	3.76	—	—	—	—	—	—	—	—	44.1	51.1	59.2	67.2
						—	—	—	—	—	—	—	—	0.8	0.9	0.9	0.9
179	226	301	12.00	48.00	3.86	—	—	—	—	—	36.6	40.5	48.7	56.7	63.3	71.1	78.8
						—	—	—	—	—	0.8	0.8	0.9	0.9	0.9	0.9	0.9
178	224	299	14.50	58.00	3.88	—	—	—	—	—	—	—	—	44.4	51.4	59.5	67.5
						—	—	—	—	—	—	—	—	0.8	0.9	0.9	0.9
172	217	289	14.00	58.00	4.01	—	—	—	—	—	—	—	—	44.7	51.7	59.9	67.8
						—	—	—	—	—	—	—	—	0.8	0.9	0.9	0.9
166	209	279	13.50	58.00	4.16	—	—	—	—	—	—	—	—	45.0	52.0	60.2	68.2
						—	—	—	—	—	—	—	—	0.8	0.9	0.9	0.9
160	202	269	13.00	58.00	4.31	—	—	—	—	—	—	—	—	45.3	52.4	60.5	68.5
						—	—	—	—	—	—	—	—	0.8	0.9	0.9	0.9
148	187	249	12.00	58.00	4.65	—	—	—	—	—	—	—	—	45.9	53.0	61.2	69.2
						—	—	—	—	—	—	—	—	0.8	0.9	0.9	0.9

⚠ **WARNING** * = Sheave Rim Speed over 6,000 feet per minute - See Page 236

CLASSICAL SECTION PRE-ENGINEERED DRIVE SELECTION TABLES

DP, DX PRE-ENGINEERED TABLES — RATIO 2.36 - 4.65

V-Belt Number and Center Distance (Other sizes may be available, see page 217)														Sheave Datum Diameters		Rated HP per Belt (Includes Added HP for Speed Ratio) Super Blue Ribbon & Gold Label Cog-Belt (DP &DX) RPM of Small Sheave		
DP/DX 270	DP/DX 285	DP/DX 300	DP/DX 315	DP/DX 330	DP/DX 345	DP/DX 360	DP/DX 390	DP/DX 420	DP/DX 450	DP/DX 480	DP/DX 540	DP/DX 600	DP/DX 660	Small Sheave	Large Sheave	690 RPM	870 RPM	1160 RPM
80.8	88.4	96.0	103.6	111.2	118.7	126.3	141.4	156.4	171.5	186.5	216.6	246.7	276.7	20.00	48.00	48.35	55.47	*
1.0	1.0	1.0	1.0	1.0	1.0	1.0	1.0	1.1	1.1	1.1	1.1	1.1	1.1					
98.5	106.0	113.5	121.0	128.6	136.1	143.6	158.6	173.7	188.7	203.7	233.7	263.8	293.8	13.50	33.00	29.02	34.05	39.97
1.0	1.0	1.0	1.0	1.0	1.0	1.0	1.1	1.1	1.1	1.1	1.1	1.1	1.1					
90.7	98.2	105.8	113.3	120.9	128.4	135.9	151.0	166.0	181.1	196.1	226.2	256.2	286.2	16.00	40.00	36.84	42.96	49.53
1.0	1.0	1.0	1.0	1.0	1.0	1.0	1.1	1.1	1.1	1.1	1.1	1.1	1.1					
98.8	106.4	113.9	121.4	128.9	136.5	144.0	159.0	174.0	189.1	204.1	234.1	264.1	294.2	13.00	33.00	27.42	32.19	37.89
1.0	1.0	1.0	1.0	1.0	1.0	1.0	1.1	1.1	1.1	1.1	1.1	1.1	1.1					
91.0	98.6	106.2	113.7	121.2	128.8	136.3	151.4	166.4	181.5	196.5	226.5	256.6	286.6	15.50	40.00	35.32	41.26	47.77
1.0	1.0	1.0	1.0	1.0	1.0	1.0	1.0	1.1	1.1	1.1	1.1	1.1	1.1					
70.3	78.1	85.7	93.4	101.0	108.6	116.2	131.4	146.5	161.6	176.7	206.8	236.9	267.0	22.00	58.00	53.67	60.89	*
1.0	1.0	1.0	1.0	1.0	1.0	1.0	1.0	1.0	1.1	1.1	1.1	1.1	1.1					
91.4	99.0	106.5	114.1	121.6	129.2	136.7	151.7	166.8	181.8	196.9	226.9	257.0	287.0	15.00	40.00	33.78	39.52	45.94
1.0	1.0	1.0	1.0	1.0	1.0	1.0	1.0	1.1	1.1	1.1	1.1	1.1	1.1					
82.3	89.9	97.5	105.1	112.6	120.2	127.7	142.8	157.9	173.0	188.0	218.1	248.2	278.2	18.00	48.00	42.77	49.53	55.94
1.0	1.0	1.0	1.0	1.0	1.0	1.0	1.0	1.1	1.1	1.1	1.1	1.1	1.1					
99.6	107.1	114.6	122.2	129.7	137.2	144.7	159.8	174.8	189.8	204.8	234.9	264.9	294.9	12.00	33.00	24.16	28.39	33.54
1.0	1.0	1.0	1.0	1.0	1.0	1.0	1.1	1.1	1.1	1.1	1.1	1.1	1.1					
91.8	99.3	106.9	114.4	122.0	129.5	137.1	152.1	167.2	182.2	197.2	227.3	257.3	287.4	14.50	40.00	32.23	37.75	44.04
1.0	1.0	1.0	1.0	1.0	1.0	1.0	1.0	1.1	1.1	1.1	1.1	1.1	1.1					
83.0	90.6	98.2	105.8	113.3	120.9	128.5	143.6	158.6	173.7	188.8	218.9	248.9	279.0	17.00	48.00	39.86	46.34	52.92
1.0	1.0	1.0	1.0	1.0	1.0	1.0	1.0	1.1	1.1	1.1	1.1	1.1	1.1					
92.1	99.7	107.3	114.8	122.4	129.9	137.4	152.5	167.5	182.6	197.6	227.7	257.7	287.8	14.00	40.00	30.66	35.95	42.08
1.0	1.0	1.0	1.0	1.0	1.0	1.0	1.0	1.1	1.1	1.1	1.1	1.1	1.1					
71.7	79.4	87.1	94.8	102.4	110.1	117.7	132.8	148.0	163.1	178.2	208.3	238.4	268.5	20.00	58.00	48.40	55.53	*
1.0	1.0	1.0	1.0	1.0	1.0	1.0	1.0	1.0	1.1	1.1	1.1	1.1	1.1					
92.5	100.1	107.6	115.2	122.7	130.3	137.8	152.9	167.9	183.0	198.0	228.1	258.1	288.1	13.50	40.00	29.07	34.11	40.05
1.0	1.0	1.0	1.0	1.0	1.0	1.0	1.0	1.1	1.1	1.1	1.1	1.1	1.1					
83.7	91.3	98.9	106.5	114.1	121.6	129.2	144.3	159.4	174.5	189.5	219.6	249.7	279.7\	16.00	48.00	36.88	43.02	49.60
1.0	1.0	1.0	1.0	1.0	1.0	1.0	1.0	1.1	1.1	1.1	1.1	1.1	1.1					
92.8	100.4	108.0	115.5	123.1	130.6	138.2	153.2	168.3	183.3	198.4	228.4	258.5	288.5	13.00	40.00	27.46	32.25	37.96
1.0	1.0	1.0	1.0	1.0	1.0	1.0	1.0	1.1	1.1	1.1	1.1	1.1	1.1					
84.0	91.6	99.3	106.8	114.4	122.0	129.6	144.7	159.8	174.8	189.9	220.0	250.1	280.1	15.50	48.00	35.36	41.31	47.83
1.0	1.0	1.0	1.0	1.0	1.0	1.0	1.0	1.1	1.1	1.1	1.1	1.1	1.1					
84.4	92.0	99.6	107.2	114.8	122.4	129.9	145.0	160.1	175.2	190.3	220.4	250.4	280.5	15.00	48.00	33.82	39.56	46.00
1.0	1.0	1.0	1.0	1.0	1.0	1.0	1.0	1.1	1.1	1.1	1.1	1.1	1.1					
73.0	80.8	88.5	96.2	103.8	111.5	119.1	134.3	149.4	164.6	179.7	209.8	239.9	270.0	18.00	58.00	42.81	49.57	56.00
1.0	1.0	1.0	1.0	1.0	1.0	1.0	1.0	1.0	1.1	1.1	1.1	1.1	1.1					
84.7	92.4	100.0	107.6	115.2	122.7	130.3	145.4	160.5	175.6	190.6	220.7	250.8	280.9	14.50	48.00	32.26	37.79	44.09
1.0	1.0	1.0	1.0	1.0	1.0	1.0	1.0	1.1	1.1	1.1	1.1	1.1	1.1					
93.6	101.1	108.7	116.3	123.8	131.4	138.9	154.0	169.0	184.1	199.1	229.2	259.2	289.3	12.00	40.00	24.20	28.43	33.59
1.0	1.0	1.0	1.0	1.0	1.0	1.0	1.0	1.1	1.1	1.1	1.1	1.1	1.1					
85.1	92.7	100.3	107.9	115.5	123.1	130.7	145.8	160.9	175.9	191.0	221.1	251.2	281.2	14.00	48.00	30.69	35.98	42.13
1.0	1.0	1.0	1.0	1.0	1.0	1.0	1.0	1.1	1.1	1.1	1.1	1.1	1.1					
73.7	81.5	89.2	96.9	104.5	112.2	119.8	135.0	150.2	165.3	180.4	210.6	240.7	270.8	17.00	58.00	39.89	46.38	52.97
1.0	1.0	1.0	1.0	1.0	1.0	1.0	1.0	1.0	1.1	1.1	1.1	1.1	1.1					
85.4	93.1	100.7	108.3	115.9	123.5	131.0	146.1	161.2	176.3	191.4	221.5	251.6	281.6	13.50	48.00	29.10	34.14	40.09
1.0	1.0	1.0	1.0	1.0	1.0	1.0	1.0	1.1	1.1	1.1	1.1	1.1	1.1					
74.4	82.2	89.9	97.6	105.2	112.9	120.5	135.7	150.9	166.0	181.1	211.3	241.4	271.5	16.00	58.00	36.90	43.05	49.64
1.0	1.0	1.0	1.0	1.0	1.0	1.0	1.0	1.0	1.1	1.1	1.1	1.1	1.1					
85.8	93.4	101.0	108.6	116.2	123.8	131.4	146.5	161.6	176.7	191.7	221.9	251.9	282.0	13.00	48.00	27.49	32.28	38.00
1.0	1.0	1.0	1.0	1.0	1.0	1.0	1.0	1.1	1.1	1.1	1.1	1.1	1.1					
74.7	82.5	90.2	97.9	105.6	113.2	120.9	136.1	151.2	166.4	181.5	211.7	241.8	271.9	15.50	58.00	35.38	41.34	47.87
1.0	1.0	1.0	1.0	1.0	1.0	1.0	1.0	1.0	1.1	1.1	1.1	1.1	1.1					
75.0	82.8	90.6	98.3	105.9	113.6	121.2	136.4	151.6	166.7	181.9	212.0	242.2	272.3	15.00	58.00	33.84	39.59	46.03
0.9	1.0	1.0	1.0	1.0	1.0	1.0	1.0	1.0	1.1	1.1	1.1	1.1	1.1					
86.5	94.1	101.7	109.4	116.9	124.5	132.1	147.2	162.3	177.4	192.5	222.6	252.7	282.8	12.00	48.00	24.22	28.45	33.63
1.0	1.0	1.0	1.0	1.0	1.0	1.0	1.0	1.1	1.1	1.1	1.1	1.1	1.1					
75.4	83.2	90.9	98.6	106.3	113.9	121.6	136.8	152.0	167.1	182.2	212.4	242.5	272.6	14.50	58.00	32.28	37.81	44.13
0.9	1.0	1.0	1.0	1.0	1.0	1.0	1.0	1.0	1.1	1.1	1.1	1.1	1.1					
75.7	83.5	91.3	99.0	106.6	114.3	121.9	137.1	152.3	167.5	182.6	212.8	242.9	273.0	14.00	58.00	30.71	36.00	42.16
0.9	1.0	1.0	1.0	1.0	1.0	1.0	1.0	1.0	1.1	1.1	1.1	1.1	1.1					
76.0	83.8	91.6	99.3	107.0	114.6	122.3	137.5	152.7	167.8	182.9	213.1	243.3	273.4	13.50	58.00	29.11	34.17	40.12
0.9	1.0	1.0	1.0	1.0	1.0	1.0	1.0	1.0	1.1	1.1	1.1	1.1	1.1					
76.4	84.2	91.9	99.7	107.3	115.0	122.6	137.9	153.0	168.2	183.3	213.5	243.7	273.8	13.00	58.00	27.50	32.30	38.02
0.9	1.0	1.0	1.0	1.0	1.0	1.0	1.0	1.1	1.1	1.1	1.1	1.1	1.1					
77.0	84.9	92.6	100.3	108.0	115.7	123.3	138.6	153.8	168.9	184.0	214.2	244.4	274.5	12.00	58.00	24.23	28.47	33.65
0.9	1.0	1.0	1.0	1.0	1.0	1.0	1.0	1.0	1.1	1.1	1.1	1.1	1.1					

⚠ **WARNING** * = Sheave Rim Speed over 6,000 feet per minute - See Page 236

DRIVE SELECTION USING BASIC HORSEPOWER RATING TABLES

DRIVE SELECTION
USING BASIC HORSEPOWER
RATING TABLES

Drive Selection Procedure
The pre-engineered tables on the previous pages cover the majority of industrial drives. On occasion, however, it may be necessary to consider a drive having an input RPM different from that of an electric motor listed in the pre-engineered tables. Therefore, the Horsepower Ratings tables have been developed to assist in designing drives with non-standard drivers or non-standard sheave sizes. For non-standard speeds it is still possible to select the sheave sizes, belt size and center distance from the pre-engineered tables by using the speed ratio column of the tables to locate the drive. The driven speed, horsepower per belt, and number of belts must be calculated by means of the following procedures.

The following example problem will assist in using the Horsepower Rating Tables.

BASIC HORSEPOWER RATING TABLE EXAMPLE PROBLEM

THE PROBLEM: An even load generator, with a normal torque intermittent duty cycle is to be driven at approximately 658 rpm by an 80 HP, 1000 rpm 6 cylinder gasoline engine. The center distance must be approximately 42″. Both shaft diameters are 3-3/8″.

THE PROCEDURE	THE SUMMARY
STEP 1 Determine Design Horsepower ... by multiplying the motor horsepower by the service factor found from table 1 on page 17	80 H.P. x 1.1 S.F. = 88 design horsepower
STEP 2 Determine V-belt Cross Section ... by using Figure 1, page 18. With a design horsepower of 88 and faster shaft speed of 1000 rpm, a 5V or cross section belt will be used.	A 5V cross section is selected. Note: The decision to use power-wedge belts was made arbitrarily from the design guide on page 5.
STEP 3 Determine Speed Ratio ... by dividing faster shaft speed by slower shaft speed.	$\frac{1000 \text{ rpm}}{658 \text{ rpm}}$ = 1.52 speed ratio
STEP 4 Determine Outside Sheave Diameters ... from the 5V drive selection table on pages 46 and 47. It is noted that there are two sheave combinations for a 1.52 speed ratio. Consider that larger sheave sizes generally result in the more economical drive, with fewer belts needed and less bearing overload.	14.0″ O.D. driver sheave and 21.2″ O.D. driven sheave with a resulting 1.52 speed ratio. Driven speed = 658 RPM

DRIVE SELECTION USING BASIC HORSEPOWER RATING TABLES (Cont'd)

THE PROCEDURE	THE SUMMARY
STEP 5 Determine V-belt size ... by reading further across the same line that the sheave diameters were selected on, under the "Nominal Center Distances" column until the center distance closest to the required 42″ Follow up that column to the V-belt size. The proper belt for this application is a 5V1400.	A 5V1400 is selected, with a nominal center distance of 42.2″
STEP 6 Determine Basic H.P. Rating Per Belt ... by referring to the 5V H.P. Rating Table on pages 158 and 159 and read down the column headed "RPM of Faster Shaft". Locate 1000 RPM. Then locate the smaller sheave diameter across the top column heading and determine the belt horsepower by locating the square in which these two columns meet. Note that the basic H.P. per belt is 26.97 H.P. The "additional'' H.P. per belt for speed ratio must now be added to 26.97. The ratio in this case is 1.52 and therefore falls into the column headed 1.36-1.57. The additional H.P. per belt for a 1.52 speed ratio is 0.86.	26.97 basic H.P. + 0.86 add on = 27.83 HP per belt
STEP 7 Determine corrected horsepower per belt ... by first calculating $\frac{D-d}{C} = .17.$ Then refer to the Arc of Contact correction factor Table 2 on page 145. Select the $\frac{D-d}{C}$ factor closest to 0.17. The closest value to this in Table 2 is 0.20, and the corresponding correction factor is 0.97. Next, the length correction factor must be located from the 5V pre-engineered tables on page 46, note that the length correction factor for a 5VX1400 is 1.0. Multiply the rated horsepower per belt by the arc of contact correction factor. Then multiply the result by the length correction factor to obtain the corrected horsepower per belt.	where: D = Large sheave diameter d = Small sheave diameter C = Center distance $\frac{21.2 - 14.0}{42.2} = 0.17$ 26.97 x 0.97 x 1.0 = 26.16 corrected horsepower per belt.
STEP 8 Determine the Number of Belts Required ... by dividing the designing horsepower (88) by the corrected horsepower rating per belt. Round any fractional numbers up to the next whole number of belts. The correct number of belts for this application is 4.	88 DHP ÷ 26.16 HP^C = 3.36 or 4 belts
STEP 9 Determine Center Distance Allowances: by referring to Table 3, page 163 to determine that a 5V1400 belt requires an allowance of 1.0″ below nominal center distance for installation, and 2.2″ above the nominal center distance for take-up.	Center distance = 42.2″ (-1″, + 2.2″)

DRIVE SELECTION USING BASIC HORSEPOWER RATING TABLES (Cont'd)

THE PROCEDURE	THE SUMMARY
STEP 10 Summarize the drive ... to include driver and driven sheave designations, number of grooves, bushings and bore sizes from the tables starting on page 240. The belts required by quantity and size designation and nominal center distance from Step 5. Also center distance adjustments from Step 9. The drive selection is now complete.	One 4-5V140 driver sheave One 4-5V212 driven sheave Two E x 3-3/8″ bushings 4-5V1400 belts

Table 2 - ARC OF CONTACT CORRECTION FACTORS

$\frac{D-d}{C}$	0.00	0.10	0.20	0.30	0.40	0.50	0.60	0.70	0.80	0.90	1.00	1.10	1.20	1.30	1.40	1.50
Correction Factor	1.00	0.99	0.97	0.96	0.94	0.93	0.91	0.89	0.87	0.85	0.82	0.80	0.77	0.73	0.70	0.65
Arc of Contact on Small Sheave (degrees)	180	174	169	163	157	151	145	139	133	127	120	113	106	99	91	83

CLASSICAL SECTION BASIC HORSEPOWER RATING TABLES

SUPER BLUE RIBBON (AP) — Super II (A) — GOLD RIBBON Cog-Belt (AX)

RPM OF FASTER SHAFT	RATED HORSEPOWER PER BELT FOR SMALL SHEAVE DATUM DIAMETER																																
	2.2 *			2.4 *			2.6 *			2.8 *			3.0			3.2			3.4			3.6			3.8			4.0			4.2		
	AP	A	AX	AP	A	AX	AP	A	AX	AP	A	AX	AP	A	AX	AP	A	AX	AP	A	AX	AP	A	AX	AP	A	AX	AP	A	AX	AP	A	AX
950	0.52	0.67	1.08	0.75	0.89	1.28	0.97	1.11	1.49	1.18	1.32	1.69	1.40	1.54	1.89	1.62	1.75	20.9	1.83	1.96	2.29	2.04	2.16	2.48	2.25	2.37	2.67	2.46	2.57	2.86	2.67	2.78	3.05
1160	0.57	0.74	1.22	0.83	1.00	1.46	1.10	1.26	1.70	1.36	1.52	1.94	1.62	1.77	2.18	1.27	2.02	2.41	2.13	2.27	2.64	2.38	2.52	2.87	2.63	2.76	3.10	2.88	3.00	3.32	3.13	3.24	3.55
1425	0.61	0.81	1.37	0.93	1.13	1.66	1.24	1.43	1.94	1.56	1.74	2.23	1.86	2.04	2.51	2.17	2.34	2.78	2.47	2.63	3.06	2.77	2.92	3.33	3.07	3.21	3.59	3.37	3.50	3.86	3.66	3.79	4.12
1750	0.64	0.88	1.52	1.02	1.25	1.87	1.39	1.61	2.21	1.77	1.97	2.54	2.13	2.33	2.87	2.50	2.68	3.20	3.86	3.03	3.52	3.21	3.38	3.83	3.57	3.72	4.15	3.92	4.06	4.46	4.26	4.40	4.77
2850	0.58	0.92	1.87	1.15	1.47	2.38	1.71	2.01	2.87	2.26	2.55	3.36	2.80	3.07	3.84	3.33	3.59	4.31	3.85	4.09	4.78	4.37	4.59	5.23	4.87	5.08	5.68	5.36	5.56	6.12	5.85	6.03	6.56
3450	0.46	0.85	1.96	1.12	1.49	2.55	1.76	2.11	3.12	2.39	2.73	3.68	3.01	3.32	4.23	3.61	3.91	4.77	4.20	4.48	5.30	4.77	5.04	5.82	5.33	5.59	6.33	5.87	6.12	6.82	6.40	6.63	7.31
100	0.12	0.15	0.21	0.15	0.17	0.24	0.18	0.20	0.27	0.21	0.23	0.30	0.23	0.26	0.33	0.26	0.29	0.36	0.29	0.32	0.38	0.32	0.35	0.41	0.35	0.37	0.44	0.37	0.40	0.47	0.40	0.43	0.50
200	0.20	0.25	0.36	0.25	0.30	0.41	0.31	0.35	0.47	0.36	0.41	0.52	0.42	0.46	0.57	0.47	0.51	0.63	0.52	0.57	0.68	0.57	0.62	0.73	0.63	0.67	0.78	0.68	0.72	0.83	0.73	0.78	0.88
300	0.27	0.33	0.49	0.34	0.41	0.56	0.42	0.48	0.64	0.50	0.56	0.72	0.58	0.64	0.79	0.65	0.71	0.87	0.73	0.79	0.94	0.81	0.87	1.02	0.88	0.94	1.09	0.96	1.02	1.16	1.03	1.09	1.23
400	0.32	0.40	0.60	0.42	0.50	0.70	0.52	0.60	0.80	0.62	0.70	0.90	0.72	0.80	0.99	0.82	0.90	1.09	0.92	1.00	1.18	1.02	1.09	1.28	1.12	1.19	1.37	1.22	1.29	1.46	1.31	1.38	1.56
500	0.37	0.46	0.70	0.49	0.59	0.82	0.62	0.71	0.94	0.74	0.83	1.06	0.86	0.95	1.18	0.98	1.07	1.29	1.10	1.19	1.41	1.22	1.31	1.52	1.34	1.43	1.63	1.46	1.54	1.75	1.58	1.66	1.86
600	0.41	0.52	0.80	0.56	0.66	0.94	0.70	0.81	1.08	0.85	0.95	1.22	0.99	1.09	1.35	1.14	1.23	1.49	1.28	1.37	1.62	1.42	1.51	1.75	1.56	1.65	1.88	1.70	1.79	2.01	1.84	1.93	2.14
700	0.45	0.57	0.88	0.62	0.74	1.05	0.78	0.90	1.20	0.95	1.06	1.36	1.12	1.23	1.52	1.28	1.39	1.67	1.44	1.55	1.82	1.61	1.71	1.97	1.77	1.87	2.12	1.93	2.02	2.27	2.09	2.18	2.42
800	0.48	0.61	0.97	0.67	0.80	1.15	0.86	0.99	1.32	1.05	1.17	1.50	1.23	1.36	1.67	1.42	1.54	1.84	1.60	1.72	2.01	1.78	1.90	2.18	1.97	2.07	2.35	2.15	2.25	2.52	2.33	2.43	2.68
900	0.51	0.65	1.04	0.72	0.86	1.24	0.93	1.07	1.44	1.14	1.27	1.63	1.35	1.48	1.82	1.55	1.68	2.01	1.75	1.88	2.20	1.96	2.08	2.38	2.16	2.27	2.57	2.36	2.47	2.75	2.56	2.66	2.93
1000	0.54	0.69	1.11	0.77	0.92	1.33	1.00	1.15	1.54	1.23	1.37	1.75	1.45	1.59	1.96	1.68	1.81	2.17	1.90	2.03	2.37	2.12	2.25	2.58	2.34	2.47	2.78	2.56	2.68	2.98	2.78	2.89	3.17
1100	0.56	0.73	1.18	0.81	0.97	1.41	1.06	1.22	1.64	1.31	1.46	1.87	1.56	1.71	2.10	1.80	1.94	2.32	2.04	2.18	2.54	2.29	2.42	2.76	2.52	2.65	2.98	2.76	2.88	3.20	3.00	3.11	3.41
1200	0.58	0.76	1.24	0.85	1.02	1.49	1.12	1.29	1.74	1.39	1.55	1.99	1.66	1.81	2.23	1.92	2.07	2.47	2.18	2.33	2.71	2.44	2.58	2.94	2.70	2.83	3.18	3.96	3.08	3.41	3.21	3.33	3.64
1300	0.59	0.78	1.30	0.89	1.07	1.57	1.18	1.36	1.83	1.47	1.64	2.10	1.75	1.92	2.36	2.03	2.19	2.61	2.31	2.46	2.87	2.59	2.74	3.12	2.87	3.00	3.37	3.14	3.27	3.61	3.41	3.54	3.86
1400	0.61	0.81	1.35	0.92	1.12	1.64	1.23	1.42	1.92	1.54	1.72	2.20	1.84	2.01	2.48	2.14	2.31	2.75	2.44	2.60	3.02	2.74	2.89	3.29	3.03	3.17	3.55	3.32	3.46	3.81	3.61	3.74	4.07
1600	0.63	0.85	1.46	0.98	1.19	1.77	1.33	1.53	2.09	1.67	1.87	2.40	2.01	2.20	2.71	2.35	2.53	3.01	2.69	2.85	3.31	3.02	3.18	3.61	3.35	3.50	3.90	3.67	3.81	4.19	3.99	4.12	4.48
1700	0.64	0.87	1.50	1.01	1.23	1.84	1.37	1.59	2.17	1.74	1.94	2.49	2.09	2.29	2.82	2.45	2.63	3.13	2.80	2.98	3.45	3.15	3.31	3.76	3.49	3.65	4.07	3.84	3.98	4.37	4.17	4.31	4.67
1800	0.64	0.88	1.55	1.03	1.26	1.90	1.42	1.64	2.24	1.80	2.01	2.59	2.17	2.37	2.92	2.54	2.73	3.26	3.91	3.09	3.58	3.28	3.45	3.91	3.64	3.80	4.23	4.00	4.14	4.55	4.35	4.49	4.86
1900	0.65	0.90	1.59	1.05	1.29	1.95	1.45	1.68	2.32	1.85	2.07	2.67	2.25	2.45	3.02	2.64	2.83	3.37	3.02	3.21	3.71	3.40	3.58	4.05	3.78	3.94	4.39	4.15	4.30	4.72	4.52	4.66	5.05
2000	0.65	0.91	1.63	1.07	1.32	2.01	1.49	1.73	2.38	1.91	2.13	2.76	2.32	2.53	3.12	2.72	2.93	3.48	3.13	3.32	3.84	3.52	3.70	4.19	3.91	4.08	4.54	4.30	4.46	4.88	4.68	4.83	5.22
2100	0.65	0.92	1.66	1.09	1.35	2.06	1.53	1.77	2.45	1.96	2.19	2.84	2.39	2.61	3.22	2.81	3.02	3.59	3.23	3.42	3.96	3.64	3.82	4.33	4.04	4.22	4.69	4.45	4.60	5.05	4.84	4.99	5.40
2200	0.64	0.92	1.70	1.10	1.37	2.11	1.56	1.81	2.52	2.01	2.25	2.92	2.45	2.68	3.31	2.89	3.10	3.70	3.32	3.52	4.08	3.75	3.94	4.46	4.17	4.35	4.84	4.59	4.75	5.20	5.00	5.15	5.57
2300	0.64	0.93	1.73	1.12	1.39	2.16	1.59	1.85	2.58	2.05	2.30	2.99	2.51	2.75	3.40	2.97	3.19	3.80	3.41	3.62	4.20	3.86	4.05	4.59	4.29	4.47	4.98	4.72	4.89	5.36	5.14	5.30	5.73
2400	0.63	0.93	1.76	1.13	1.41	2.20	1.62	1.88	2.64	2.10	2.35	3.06	2.57	2.81	3.49	2.04	3.27	3.90	3.50	3.72	4.31	3.96	4.16	4.71	4.41	4.59	5.11	4.85	5.02	5.51	5.28	5.44	5.89
2500	0.62	0.93	1.79	1.14	1.43	2.24	1.64	1.92	2.69	2.14	2.40	3.13	2.63	2.88	3.57	3.11	3.34	4.00	3.59	3.81	4.42	4.06	4.26	4.84	4.52	4.71	5.25	4.97	5.15	5.65	5.42	5.58	6.05
2600	0.61	0.93	1.81	1.14	1.44	2.28	1.66	1.95	2.75	2.18	2.45	3.20	2.68	2.94	3.65	3.18	3.42	4.09	3.67	3.89	4.53	4.15	4.36	4.95	4.63	4.82	5.38	5.09	5.27	5.79	5.55	5.72	6.20
2700	0.60	0.93	1.84	1.15	1.45	2.32	1.68	1.98	2.80	2.21	2.49	3.27	2.73	2.99	3.73	3.24	3.49	4.18	3.75	3.98	4.63	4.24	4.46	5.07	4.73	4.93	5.50	5.20	5.39	5.93	5.67	5.85	6.35
2800	0.59	0.92	1.86	1.15	1.47	2.36	1.70	2.00	2.85	2.24	2.53	3.33	2.78	3.05	3.80	3.30	3.55	4.27	3.82	4.06	4.73	4.33	4.55	5.18	4.82	5.03	5.62	5.31	5.50	6.06	5.79	5.97	6.49
2900	0.57	0.91	1.88	1.15	1.47	2.39	1.72	2.02	2.90	2.27	2.57	3.39	2.82	3.10	3.88	3.36	63.62	4.35	3.89	4.13	4.82	4.41	4.63	5.29	4.92	5.13	5.74	5.41	5.61	6.19	5.90	6.09	6.63
3000	0.56	0.91	1.90	1.15	1.48	2.42	1.73	2.05	2.94	2.30	2.60	3.45	2.86	3.14	3.95	3.41	3.68	4.44	3.95	4.20	4.92	4.48	4.72	5.39	5.00	5.22	5.85	5.51	5.72	6.31	6.01	6.20	6.76

* = Diameters below RMA minimum for other than Cog-Belt V-belts. Use with Super Blue Ribbon or Aramax V-belts will result in reduced life and loss of efficiency.

⚠**WARNING** ** = sheave rim speeds in excess of 6,000 feet per minute — see page 236

CLASSICAL SECTION BASIC HORSEPOWER RATING TABLES

SUPER BLUE RIBBON (AP) — Super II (A) — GOLD RIBBON Cog-Belt (AX)

RPM OF FASTER SHAFT	RATED HORSEPOWER PER BELT FOR SMALL SHEAVE DATUM DIAMETER																																
	2.2 *			2.4 *			2.6 *			2.8 *			3.0			3.2			3.4			3.6			3.8			4.0			4.2		
	AP	A	AX	AP	A	AX	AP	A	AX	AP	A	AX	AP	A	AX	AP	A	AX	AP	A	AX	AP	A	AX	AP	A	AX	AP	A	AX	AP	A	AX
3100	0.54	0.90	1.92	1.14	1.49	2.45	1.74	2.06	2.98	2.33	2.63	3.50	2.90	3.19	4.01	3.46	3.74	4.51	4.02	4.27	5.01	4.56	4.80	5.49	5.09	5.31	5.97	5.60	5.81	6.43	6.11	6.31	6.89
3200	0.52	0.89	1.93	1.14	1.49	2.48	1.75	2.08	3.03	2.35	2.66	3.56	2.94	3.23	4.08	3.51	3.79	4.59	4.07	4.34	5.09	4.62	4.87	5.59	5.16	5.40	6.07	5.69	5.91	6.55	6.20	6.41	7.02
3300	0.49	0.87	1.95	1.13	1.49	2.51	1.76	2.10	3.06	2.37	2.69	3.61	2.97	3.27	4.14	3.55	3.84	4.66	4.13	4.40	5.18	4.69	4.94	5.68	5.23	5.48	6.18	5.77	6.00	6.66	6.28	6.50	7.14
3400	0.47	0.86	1.96	1.12	1.49	2.54	1.76	2.11	3.10	2.38	2.71	3.66	3.00	3.31	4.20	3.59	3.89	4.74	4.18	4.45	5.26	4.75	5.01	5.77	5.30	5.55	6.28	5.84	6.08	6.77	6.36	6.59	7.25
3500	0.44	0.84	1.97	1.11	1.49	2.56	1.76	2.12	3.14	2.40	2.74	3.70	3.02	3.34	4.26	3.63	3.93	4.80	4.22	4.51	5.34	4.80	5.07	5.86	5.36	5.62	6.37	5.91	6.15	6.88	6.44	6.67	7.37
3600	0.42	0.82	1.98	1.10	1.48	2.58	1.76	2.13	3.17	2.41	2.76	3.75	3.04	3.37	4.31	3.66	3.97	4.87	4.26	4.56	5.41	4.85	5.13	5.94	5.42	5.69	6.47	5.97	6.23	6.98	6.50	6.75	7.48
3700	0.39	0.80	1.99	1.08	1.47	2.60	1.76	2.13	3.20	2.42	2.77	3.79	3.06	3.40	4.37	3.69	4.01	4.93	4.30	4.60	5.49	4.89	5.18	6.03	5.47	5.75	6.56	6.02	6.29	7.07	6.56	6.82	7.58
3800	0.36	0.78	1.99	1.06	1.47	2.62	1.75	2.13	3.23	2.42	2.79	3.83	3.08	3.42	4.42	3.71	4.04	4.99	4.33	4.65	5.55	4.93	5.23	6.10	5.51	5.80	6.64	6.07	6.35	7.17	6.61	6.89	7.68
3900	0.32	0.76	2.00	1.04	1.45	2.63	1.74	2.13	3.26	2.43	2.80	3.87	3.09	3.44	4.47	3.74	4.07	5.05	4.36	4.68	5.62	4.97	5.28	6.18	5.55	5.85	6.73	6.11	6.41	7.26	6.65	6.94	7.78
4000	0.29	0.73	2.00	1.02	1.44	2.65	1.73	2.13	3.29	2.43	2.81	3.91	3.10	3.46	4.51	3.75	4.10	5.11	4.38	4.72	5.69	4.99	5.32	6.25	5.58	5.90	6.81	6.15	6.46	7.34	6.69	7.00	7.87
4100	0.25	0.71	2.00	1.00	1.43	2.66	1.72	2.13	3.31	2.42	2.81	3.94	3.10	3.48	4.56	3.77	4.12	5.16	4.40	4.75	5.75	5.02	5.35	6.32	5.61	5.94	6.88	6.18	6.50	7.43	6.72	7.04	7.96
4200	0.22	0.68	2.00	0.97	1.41	2.67	1.70	2.12	3.33	2.42	2.82	3.97	3.11	3.49	4.60	3.77	4.14	5.21	4.42	4.77	5.81	5.04	5.38	6.39	5.63	5.97	6.95	6.20	6.54	7.51	6.74	7.08	8.04
4300	0.18	0.65	2.00	0.94	1.39	2.69	1.69	2.12	3.35	2.41	2.82	4.00	3.11	3.50	4.64	3.78	4.16	5.26	4.43	4.80	5.86	5.05	5.41	6.45	5.65	6.00	7.02	6.22	6.57	7.58	6.76	7.11	8.12
4400	0.13	0.62	2.00	0.91	1.37	2.69	1.67	2.10	3.37	2.40	2.82	4.03	3.10	3.51	4.68	3.78	4.17	5.30	4.43	4.81	5.91	5.06	5.43	6.51	5.66	6.03	7.09	6.23	6.59	7.65	6.76	7.14	8.20
4500	0.09	0.58	2.00	0.88	1.35	2.70	1.64	2.09	3.39	2.38	2.81	4.06	3.09	3.51	4.71	3.78	4.18	5.35	4.43	4.83	5.96	5.06	5.45	6.57	5.66	6.04	7.15	6.23	6.61	7.72	6.76	7.15	8.27
4600	0.05	0.55	1.99	0.85	1.32	2.71	1.62	2.08	3.40	2.36	2.80	4.08	3.08	3.51	4.74	3.77	4.19	5.39	4.43	4.84	6.01	5.06	5.46	6.62	5.66	6.06	7.21	6.22	6.63	7.78	6.75	7.17	8.34
4700	-0.0	0.51	1.98	0.81	1.30	2.71	1.59	2.06	3.42	2.34	2.79	4.10	3.07	3.50	4.77	3.76	4.19	5.42	4.42	4.84	6.06	5.05	5.47	6.67	5.65	6.07	7.27	6.21	6.63	7.84	6.73	7.17	8.40
4800	-0.05	0.47	1.98	0.77	1.27	2.71	1.56	2.04	3.43	2.32	2.78	4.12	3.05	3.50	4.80	3.74	4.19	5.46	4.41	4.84	6.10	5.04	5.47	6.72	5.63	6.07	7.32	6.19	6.63	7.90	6.71	7.17	8.46
4900	-0.10	0.43	1.97	0.73	1.24	2.71	1.53	2.02	3.44	2.29	2.77	4.14	3.03	3.49	4.83	3.73	4.18	5.49	4.39	4.84	6.14	5.02	5.47	6.76	5.61	6.07	7.37	6.16	6.63	7.95	6.67	7.16	8.52
5000	-0.15	0.39	1.96	0.69	1.21	2.71	1.49	1.99	3.45	2.26	2.75	4.16	3.00	3.47	4.85	3.70	4.17	5.52	4.37	4.83	6.17	4.99	5.46	6.80	5.58	6.06	7.41	6.13	6.62	8.00	6.63	7.14	8.57
5200	-0.26	0.30	1.93	0.59	1.14	2.71	1.41	1.94	3.46	2019	2.70	4.19	2.94	3.44	4.89	3.64	4.14	5.58	4.30	4.80	6.24	4.92	5.43	6.88	5.50	6.02	7.49	6.03	6.57	8.09	6.52	7.08	8.65
5400	-0.38	0.21	1.90	0.49	1.06	2.70	1.32	1.87	3.46	2.11	2.65	4.21	2.86	3.39	4.93	3.56	4.09	5.62	4.22	4.76	6.29	4.83	5.38	6.94	5.40	5.96	7.56	5.91	6.50	8.16	6.37	6.99	8.73
5600	-0.50	0.11	1.87	0.38	0.97	2.68	1.22	1.79	3.46	2.01	2.58	4.22	2.76	3.33	4.95	3.46	4.03	5.66	4.12	4.69	6.33	4.72	5.31	6.99	5.26	5.88	7.61	5.75	6.40	8.21	**	**	**
5800	-0.64	-0.00	1.83	0.26	0.87	2.65	1.10	1.71	3.45	1.90	2.50	4.22	2.65	3.25	4.97	3.35	3.95	5.68	3.99	4.61	6.36	4.57	5.21	7.02	5.10	5.77	7.65	**	**	**	**	**	**
6000	-0.78	-0.12	1.78	0.13	0.77	2.63	0.98	1.61	3.44	1.78	2.41	4.22	2.52	3.16	4.97	3.21	3.86	5.69	3.84	4.50	6.38	4.40	5.10	7.04	4.90	5.63	7.67	**	**	**	**	**	**
6200	-0.93	-0.24	1.73	-0.02	0.65	2.59	0.84	1.50	3.42	1.64	2.30	4.21	2.38	3.05	4.97	3.06	3.74	5.70	3.67	4.38	6.39	4.21	4.96	7.05	**	**	**	**	**	**	**	**	**
6400	-1.08	-0.38	1.68	-0.17	0.53	2.55	0.69	1.39	3.39	1.49	2.19	4.19	2.22	2.93	4.96	2.88	3.61	5.69	3.47	4.24	6.39	**	**	**	**	**	**	**	**	**	**	**	**
6600	-1.25	-0.51	1.62	-0.33	0.40	2.50	0.53	1.26	3.35	1.32	2.06	4.16	2.04	2.79	4.94	2.68	3.46	5.67	3.25	4.07	6.37	**	**	**	**	**	**	**	**	**	**	**	**
6800	-1.42	-0.66	1.55	-0.50	0.26	2.45	0.36	1.12	3.31	1.14	1.91	4.13	1.84	2.64	4.91	2.46	3.30	5.65	**	**	**	**	**	**	**	**	**	**	**	**	**	**	**
7000	-1.61	-0.81	1.48	-0.68	0.11	2.39	0.17	0.97	3.26	0.94	1.76	4.08	1.63	2.47	4.84	2.22	3.11	5.61	**	**	**	**	**	**	**	**	**	**	**	**	**	**	**
7200	-1.80	-0.97	1.41	-0.87	-0.05	2.33	-0.03	0.80	3.20	0.72	1.58	4.03	1.39	2.29	4.82	**	**	**	**	**	**	**	**	**	**	**	**	**	**	**	**	**	**
7400	-2.00	-1.14	1.33	-1.08	-0.22	2.26	-0.25	0.63	3.14	0.49	1.40	3.97	1.14	2.09	4.76	**	**	**	**	**	**	**	**	**	**	**	**	**	**	**	**	**	**
7600	-2.21	-1.32	1.24	-1.29	-0.40	2.18	-0.47	0.45	3.07	0.25	1.20	3.91	0.86	1.87	4.70	**	**	**	**	**	**	**	**	**	**	**	**	**	**	**	**	**	**
7800	-243	-1.51	1.15	-1.52	-0.58	2.10	-0.72	0.25	2.99	-0.02	0.99	3.83	**	**	**	**	**	**	**	**	**	**	**	**	**	**	**	**	**	**	**	**	**
8000	-2.66	-1.70	1.06	-1.76	-0.78	2.01	-0.97	0.04	2.91	-0.30	0.76	3.75	**	**	**	**	**	**	**	**	**	**	**	**	**	**	**	**	**	**	**	**	**

* = Diameters below RMA minimum for other than Cog-Belt V-belts. Use with Super Blue Ribbon or Aramax V-belts will result in reduced life and loss of efficiency.

⚠**WARNING** ** = sheave rim speeds in excess of 6,000 feet per minute — see page 236

CLASSICAL SECTION BASIC HORSEPOWER RATING TABLES

SUPER BLUE RIBBON (AP) — Super II (A) — GOLD RIBBON Cog-Belt (AX)

RPM OF FASTER SHAFT	RATED HORSEPOWER PER BELT FOR SMALL SHEAVE DATUM DIAMETER																																	
	4.6			4.8			5.0			5.2			5.6			6.0			6.4			7.0			1.00 to 1.01	1.02 to 1.03	1.04 to 1.06	1.07 to 1.08	1.09 to 1.12	1.13 to 1.16	1.17 to 1.22	1.23 to 1.32	1.33 to 1.50	1.51 and over
	AP	A	AX	AP	A	AX	AP	A	AX	AP	A	AX	AP	A	AX	AP	A	AX	AP	A	AX	AP	A	AX										
950	3.08	3.18	3.43	3.29	3.38	3.61	3.49	3.58	3.80	3.69	3.77	3.98	4.09	4.16	4.34	4.49	4.55	4.69	4.88	4.93	5.04	5.46	5.49	5.56	0.00	0.02	0.05	0.07	0.09	0.12	0.14	0.17	0.20	0.24
1160	3.62	3.72	3.98	3.86	3.95	4.20	4.10	4.19	4.42	4.34	4.42	4.63	4.81	4.88	5.05	5.28	5.33	5.47	5.74	5.78	5.87	6.42	6.44	6.48	0.00	0.03	0.06	0.09	0.11	0.15	0.17	0.21	0.25	0.29
1425	4.24	4.35	4.64	4.53	4.63	4.89	4.81	4.90	5.14	5.09	5.18	5.39	5.65	5.72	5.89	6.20	6.25	6.37	6.73	6.77	6.85	7.52	7.53	7.55	0.00	0.04	0.07	0.11	0.14	0.18	0.21	0.26	0.30	0.35
1750	4.94	5.06	5.37	5.28	5.38	5.67	5.61	5.71	5.96	5.94	6.02	6.25	6.59	6.65	6.83	7.22	7.26	7.39	7.84	7.86	7.94	8.73	8.74	8.75	0.00	0.04	0.08	0.14	0.17	0.22	0.26	0.31	0.37	0.44
2850	6.78	6.94	7.41	7.24	7.38	7.82	7.68	7.82	8.23	8.11	8.24	8.63	8.93	9.06	9.41	9.71	9.83	10.16	10.44	10.56	10.89	11.44	11.57	11.93	0.00	0.07	0.14	0.22	0.27	0.36	0.43	0.51	0.61	0.71
3450	7.40	7.62	8.26	7.88	8.09	8.72	8.34	8.55	9.17	8.78	8.99	9.60	9.60	9.83	10.45	10.35	10.59	11.26	11.0	11.29	12.03	**	**	**	0.00	0.09	0.16	0.27	0.33	0.43	0.52	0.62	0.74	0.86
100	0.46	0.48	0.55	0.48	0.51	0.58	0.51	0.54	0.61	0.54	0.57	0.63	0.59	0.62	0.69	0.64	0.67	0.74	0.70	0.73	0.79	0.78	0.81	0.87	0.00	0.01	0.01	0.02	0.02	0.03	0.03	0.04	0.05	0.06
200	0.83	0.88	0.99	0.88	0.93	1.04	0.93	0.98	1.09	0.98	1.03	1.13	1.09	1.13	1.23	1.19	1.23	1.33	1.29	1.33	1.43	1.43	1.48	1.57	0.00	0.01	0.02	0.03	0.04	0.06	0.07	0.08	0.10	0.11
300	1.18	1.24	1.38	1.25	1.31	1.45	1.33	1.38	1.52	1.40	1.45	1.59	1.54	1.60	1.73	1.69	1.74	1.86	1.83	1.88	2.00	2.05	2.09	2.20	0.00	0.02	0.03	0.05	0.06	0.08	0.1.	0.12	0.14	0.17
400	1.50	1.57	1.74	1.60	1.67	1.83	1.70	1.76	1.92	1.79	1.85	2.01	1.98	2.04	2.18	2.18	2.22	2.36	2.35	2.41	2.53	2.63	2.68	2.79	0.00	0.02	0.04	0.07	0.08	0.11	0.13	0.16	0.19	0.22
500	1.82	1.89	20.8	1.93	2.01	2.19	2.05	2.12	2.29	2.16	2.23	2.40	2.39	2.46	2.62	2.62	2.68	2.83	2.85	2.91	3.03	3.18	3.23	3.34	0.00	0.03	0.05	0.09	0.11	0.14	0.17	0.20	0.24	0.28
600	2.11	2.20	2.40	2.25	2.33	2.53	2.39	2.47	2.65	2.52	2.60	2.78	2.79	2.86	3.03	3.06	3.12	3.27	3.33	3.38	3.51	3.72	3.77	3.87	0.00	0.03	0.06	0.10	0.13	0.17	0.20	0.24	0.29	0.33
700	2.40	2.49	2.71	2.56	2.64	2.85	2.72	2.80	3.00	2.87	2.95	3.14	3.18	3.25	3.42	3.49	3.55	3.70	3.79	3.84	3.97	4.24	4.28	4.38	0.00	0.04	0.07	0.12	0.15	0.20	0.23	0.28	0.33	0.39
800	2.68	2.77	3.00	2.86	2.85	3.17	3.03	3.12	3.32	3.21	3.29	3.48	3.55	3.63	3.80	3.90	3.96	4.11	4.24	4.29	4.41	4.74	4.78	4.86	0.00	0.04	0.08	0.14	0.17	0.22	0.27	0.32	0.38	0.44
900	2.95	3.05	3.29	3.15	3.24	3.47	3.34	3.43	3.64	3.53	3.61	3.82	3.92	3.99	4.16	4.30	4.36	4.50	4.67	4.72	4.84	5.23	5.26	5.33	0.00	0.05	0.10	0.16	0.19	0.25	0.30	0.36	0.43	0.50
1000	3.21	3.31	3.56	3.43	3.52	3.76	3.64	3.73	3.95	3.85	3.93	4.14	4.27	4.34	4.51	4.68	4.74	4.88	5.09	5.14	5.25	5.70	5.72	5.78	0.00	0.06	0.11	0.17	0.21	0.28	0.34	0.40	0.48	0.56
1100	3.47	3.57	3.83	3.70	3.79	4.04	3.93	4.02	4.24	4.16	4.24	4.45	4.61	4.68	4.85	5.06	5.11	5.25	5.50	5.54	5.64	6.15	6.17	6.22	0.00	0.06	0.12	0.19	0.23	0.31	0.37	0.44	0.53	0.61
1200	3.71	3.82	4.09	3.96	4.06	4.31	4.21	4.30	4.53	4.45	4.54	4.75	4.94	5.01	5.18	5.42	5.47	5.61	5.89	5.93	6.03	6.59	6.61	6.64	0.00	0.07	0.13	0.21	0.25	0.34	0.40	0.48	0.57	0.67
1300	3.95	4.06	4.34	4.22	4.32	4.57	4.48	4.57	4.81	4.74	4.83	5.04	5.26	5.33	5.50	5.77	5.82	5.95	6.27	6.31	6.40	7.01	7.03	7.05	0.00	0.07	0.14	0.22	0.28	0.36	0.44	0.52	0.62	0.72
1400	4.18	4.29	4.58	4.47	4.57	4.83	4.75	4.84	5.08	5.02	5.11	5.32	5.57	5.64	5.81	6.11	6.16	6.29	6.64	6.68	6.76	7.42	7.43	7.45	0.00	0.08	0.15	0.24	0.30	0.39	0.47	0.56	0.67	0.78
1600	4.63	4.74	5.04	4.94	5.04	4.32	5.25	5.35	5.59	5.56	5.64	5.87	6.17	6.23	6.40	6.76	6.81	6.93	7.34	7.37	7.45	8.20	8.20	8.21	0.00	0.09	0.17	0.28	0.34	0.45	0.54	0.64	0.76	0.89
1700	4.84	4.95	5.26	5.17	5.27	5.55	5.49	5.59	5.84	5.82	5.90	6.13	6.45	6.51	6.69	7.07	7.12	7.24	7.68	7.70	7.78	8.56	8.56	8.57	0.00	0.09	0.18	0.29	0.36	0.48	0.57	0.68	0.81	0.94
1800	5.05	5.16	5.48	5.39	5.49	5.78	5.73	5.82	6.08	6.06	6.15	6.38	6.72	6.79	6.96	7.36	7.41	7.54	7.99	8.02	8.10	8.90	8.91	8.92	0.00	0.10	0.19	0.31	0.38	0.50	0.60	0.72	0.86	1.00
1900	5.24	5.36	5.69	5.60	5.71	6.00	5.95	6.05	6.32	6.30	6.39	6.62	6.98	7.05	7.23	7.65	7.70	7.83	8.30	8.33	8.41	9.23	9.24	9.26	0.00	0.11	0.20	0.33	0.40	0.53	0.64	0.76	0.91	1.06
2000	5.44	5.56	5.89	5.81	5.91	6.22	6.17	6.27	6.54	6.53	6.62	6.86	7.23	7.30	7.49	7.92	7.97	8.11	8.59	8.62	8.71	9.55	9.56	9.59	0.00	0.11	0.21	0.35	0.42	0.56	0.67	0.80	0.96	1.11
2100	5.62	5.74	6.09	6.00	6.11	6.43	6.38	6.48	7.76	6.75	6.84	7.10	7.48	7.55	7.75	8.18	8.23	8.38	8.86	8.90	9.00	9.84	9.86	9.90	0.00	0.12	0.22	0.36	0.44	0.59	0.70	0.84	1.00	1.17
2200	5.80	5.93	6.28	6.19	6.31	6.63	6.58	6.68	6.98	6.96	7.05	7.32	7.71	7.78	7.99	8.43	8.48	8.65	9.12	9.16	9.28	10.12	10.14	10.21	0.00	0.12	0.23	0.38	0.47	0.62	0.74	0.88	1.05	1.22
2300	5.97	6.10	6.47	6.37	6.49	6.83	6.77	6.88	7.19	7.16	7.26	7.54	7.93	8.00	8.23	8.66	8.72	8.90	9.37	9.42	9.56	10.38	10.41	10.50	0.00	0.13	0.24	0.40	0.49	0.64	0.77	0.92	1.10	1.28
2400	6.13	6.27	6.65	6.55	6.67	7.02	6.96	7.07	7.39	7.36	7.46	7.75	8.14	8.22	8.46	8.88	8.95	9.15	9.60	9.66	9.82	10.62	10.66	10.79	0.00	0.13	0.25	0.41	0.51	0.67	0.80	0.96	1.15	1.33
2500	6.29	6.43	6.83	6.72	6.84	7.21	7.13	7.25	7.59	7.54	7.65	7.96	8.33	7.42	8.68	9.09	9.17	9.39	9.82	9.88	10.07	10.83	10.89	11.06	0.00	0.14	0.26	0.43	0.53	0.70	0.84	1.00	1.19	1.39
2600	6.44	6.59	7.00	6.87	7.01	7.39	7.30	7.42	7.78	7.71	7.83	8.16	8.52	8.62	8.90	9.29	9.37	9.62	10.02	10.09	10.32	11.03	11.11	11.32	0.00	0.14	0.28	0.45	0.55	0.73	0.87	1.04	1.24	1.44
2700	6.58	6.73	7.17	7.02	7.16	7.57	7.46	7.59	7.96	7.88	8.00	8.35	8.69	8.80	9.11	9.47	9.56	9.84	10.20	10.29	10.55	11.21	11.31	11.57	0.00	0.15	0.29	0.47	0.57	0.75	0.91	1.08	1.29	1.50
2800	6.72	6.87	7.33	7.17	7.31	7.74	7.61	7.74	8.14	8.03	8.16	8.54	8.86	8.97	9.31	9.63	9.74	10.06	10.37	10.47	10.78	11.37	11.49	11.81	0.00	0.16	0.30	0.48	0.59	0.78	0.94	1.12	1.34	1.56
2900	6.85	7.01	7.49	7.30	7.45	7.90	7.74	7.89	8.32	8.18	8.32	8.72	9.01	9.13	9.51	9.79	9.91	10.27	10.52	10.64	11.00	11.51	11.65	12.04	0.00	0.16	0.31	0.50	0.61	0.81	0.97	1.16	1.39	1.61
3000	6.97	7.14	7.64	7.43	7.59	8.06	7.87	8.03	8.48	8.31	8.46	8.89	9.14	9.29	9.69	9.92	10.07	10.47	10.65	10.80	11.21	11.62	11.80	12.26	0.00	0.17	0.32	0.52	0.64	0.84	1.01	1.20	1.43	1.67

* = Diameters below RMA minimum for other than Cog Belt V-belts. Use with Super Blue Ribbon or Aramax V-belts will result in reduced life and loss of efficiency.

⚠ **WARNING** ** = sheave rim speeds in excess of 6,000 feet per minute — see page 236

CLASSICAL SECTION BASIC HORSEPOWER RATING TABLES

SUPER BLUE RIBBON (AP) — Super II (A) — GOLD RIBBON Cog-Belt (AX)

RPM OF FASTER SHAFT	RATED HORSEPOWER PER BELT FOR SMALL SHEAVE DATUM DIAMETER																																	
	4.6			4.8			5.0			5.2			5.6			6.0			6.4			7.0			1.00 to 1.01	1.02 to 1.03	1.04 to 1.06	1.07 to 1.08	1.09 to 1.12	1.13 to 1.16	1.17 to 1.22	1.23 to 1.32	1.33 to 1.50	1.51 and over
	AP	A	AX	AP	A	AX	AP	A	AX	AP	A	AX	AP	A	AX	AP	A	AX	AP	A	AX	AP	A	AX										
3100	7.08	7.26	7.78	7.54	7.72	8.22	8.00	8.16	8.64	8.43	8.60	9.06	9.27	9.43	9.88	10.05	10.21	10.66	10.76	10.93	11.40	11.71	11.92	12.47	0.00	0.17	0.33	0.54	0.66	0.87	1.04	1.24	1.48	1.72
3200	7.18	7.37	7.93	7.65	7.83	8.37	8.11	8.28	8.80	8.55	8.72	9.23	9.38	9.55	10.05	10.15	10.33	10.84	10.86	11.05	11.59	11.78	12.02	12.66	0.00	0.18	0.34	0.55	0.68	0.89	1.07	1.28	1.53	1.78
3300	7.28	7.48	8.06	7.75	7.94	8.51	8.21	8.40	8.95	8.65	8.84	9.38	9.48	9.67	10.22	10.24	10.45	11.01	10.93	11.16	11.77	**	**	**	0.00	0.18	0.35	0.57	0.70	0.92	1.11	1.32	1.58	1.83
3400	7.36	7.58	8.19	7.84	8.05	8.65	8.30	8.50	9.10	8.74	8.94	9.53	9.57	9.78	10.38	10.32	10.55	11.18	10.99	11.25	11.94	**	**	**	0.00	0.19	0.36	0.59	0.72	0.95	1.14	1.36	1.62	1.89
3500	7.44	7.67	8.32	7.92	8.14	8.78	8.38	8.60	9.23	8.82	9.04	9.68	9.64	9.87	10.53	10.38	10.63	11.34	11.03	11.32	12.10	**	**	**	0.00	0.19	0.37	0.60	0.74	0.98	1.17	1.40	1.67	1.94
3600	7.51	7.75	8.44	7.99	8.23	8.91	8.45	8.68	9.37	8.88	9.13	9.81	9.69	9.95	10.67	10.42	10.70	11.49	**	**	**	**	**	**	0.00	0.20	0.38	0.62	0.76	1.01	1.21	1.44	1.72	2.00
3700	7.57	7.83	8.56	8.05	8.30	9.03	8.50	8.76.	9.50	8.94	9.20	9.94	9.74	10.02	10.81	10.44	10.76	11.63	**	**	**	**	**	**	0.00	0.21	0.39	0.64	0.78	1.03	1.24	1.48	1.77	2.06
3800	7.63	7.90	8.67	8.10	8.37	9.15	8.55	8.83	9.62	8.98	9.27	10.07	9.76	10.08	10.94	10.45	10.80	11.76	**	**	**	**	**	**	0.00	0.21	0.40	0.66	0.81	1.06	1.27	1.52	1.82	2.11
3900	7.67	7.96	8.78	8.14	8.43	9.26	8.59	8.89	9.73	9.01	9.32	10.19	9.78	10.12	11.06	**	**	**	**	**	**	**	**	**	0.00	0.22	0.41	0.67	0.83	1.09	1.31	1.56	1.86	2.17
4000	7.70	8.01	8.88	8.17	8.48	9.37	8.61	8.94	9.84	9.03	9.37	10.30	9.77	10.15	11.18	**	**	**	**	**	**	**	**	**	0.00	0.22	0.42	0.69	0.85	1.12	1.34	1.60	1.91	2.22
4100	7.73	8.05	8.98	8.19	8.53	9.47	8.63	8.97	9.95	9.03	9.40	10.41	**	**	**	**	**	**	**	**	**	**	**	**	0.00	0.23	0.43	0.71	0.87	1.15	1.37	1.64	1.96	2.28
4200	7.74	8.09	9.07	8.20	8.56	9.57	8.63	9.00	10.04	9.02	9.42	10.51	**	**	**	**	**	**	**	**	**	**	**	**	0.00	0.23	0.45	0.73	0.89	1.17	1.41	1.68	20.1	2.33
4300	7.75	8.12	9.16	8.20	8.58	9.66	8.62	9.02	10.14	9.00	9.43	10.60	**	**	**	**	**	**	**	**	**	**	**	**	0.00	0.24	0.46	0.74	0.91	1.20	1.44	1.72	2.05	2.39
4400	7.75	8.14	9.24	8.19	8.60	9.74	8.60	9.03	10.22	8.97	9.43	10.69	**	**	**	**	**	**	**	**	**	**	**	**	0.00	0.24	0.47	0.76	0.93	1.23	1.47	1.76	2.10	2.44
4500	7.73	8.15	9.32	8.16	8.60	9.82	8.56	9.02	10.30	*	*	*	**	**	**	**	**	**	**	**	**	**	**	**	0.00	0.25	0.48	0.78	0.95	1.26	1.51	1.80	2.15	2.50
4600	7.71	8.15	9.39	8.13	8.60	9.90	**	**	**	**	**	**	**	**	**	**	**	**	**	**	**	**	**	**	0.00	0.26	0.49	0.79	0.97	1.29	1.54	1.85	2.20	2.56
4700	7.67	8.15	9.46	8.08	8.58	9.96	**	**	**	**	**	**	**	**	**	**	**	**	**	**	**	**	**	**	0.00	0.26	0.50	0.81	1.00	1.31	1.58	1.89	2.25	2.61
4800	7.63	8.13	8.52	**	**	**	**	**	**	**	**	**	**	**	**	**	**	**	**	**	**	**	**	**	0.00	0.27	0.51	0.83	1.02	1.34	1.61	1.93	2.29	2.67
4900	7.57	8.10	9.58	**	**	**	**	**	**	**	**	**	**	**	**	**	**	**	**	**	**	**	**	**	0.00	0.27	0.52	0.85	1.04	1.37	1.64	1.97	2.34	2.72
5000	**	**	**	**	**	**	**	**	**	**	**	**	**	**	**	**	**	**	**	**	**	**	**	**	0.00	0.28	0.53	0.86	1.06	1.40	1.68	2.01	2.39	2.78
5200	**	**	**	**	**	**	**	**	**	**	**	**	**	**	**	**	**	**	**	**	**	**	**	**	0.00	0.29	0.55	0.90	1.10	1.45	1.74	2.09	2.48	2.89
5400	**	**	**	**	**	**	**	**	**	**	**	**	**	**	**	**	**	**	**	**	**	**	**	**	0.00	0.30	0.57	0.93	1.14	1.51	1.81	2.17	2.58	3.00
5600	**	**	**	**	**	**	**	**	**	**	**	**	**	**	**	**	**	**	**	**	**	**	**	**	0.00	0.31	0.59	0.97	1.19	1.57	1.88	2.25	2.68	3.11
5800	**	**	**	**	**	**	**	**	**	**	**	**	**	**	**	**	**	**	**	**	**	**	**	**	0.00	0.32	0.61	1.00	1.23	1.62	1.94	2.33	2.77	3.22
6000	**	**	**	**	**	**	**	**	**	**	**	**	**	**	**	**	**	**	**	**	**	**	**	**	0.00	0.33	0.64	1.04	1.27	1.68	2.01	2.41	2.87	3.33
6200	**	**	**	**	**	**	**	**	**	**	**	**	**	**	**	**	**	**	**	**	**	**	**	**	0.00	0.35	0.66	1.07	1.31	1.73	2.08	2.49	2.96	3.44
6400	**	**	**	**	**	**	**	**	**	**	**	**	**	**	**	**	**	**	**	**	**	**	**	**	0.00	0.36	0.68	1.11	1.36	1.79	2.15	2.57	3.06	3.56
6600	**	**	**	**	**	**	**	**	**	**	**	**	**	**	**	**	**	**	**	**	**	**	**	**	0.00	0.37	0.70	1.14	1.40	1.85	2.21	2.65	3.15	3.67
6800	**	**	**	**	**	**	**	**	**	**	**	**	**	**	**	**	**	**	**	**	**	**	**	**	0.00	0.38	0.72	1.17	1.44	1.90	2.28	2.73	3.25	3.78
7000	**	**	**	**	**	**	**	**	**	**	**	**	**	**	**	**	**	**	**	**	**	**	**	**	0.00	0.39	0.74	1.21	1.48	1.96	2.35	2.81	3.34	3.89
7200	**	**	**	**	**	**	**	**	**	**	**	**	**	**	**	**	**	**	**	**	**	**	**	**	0.00	0.40	0.76	1.24	1.53	2.01	2.41	2.89	3.44	4.00
7400	**	**	**	**	**	**	**	**	**	**	**	**	**	**	**	**	**	**	**	**	**	**	**	**	0.00	0.41	0.78	1.28	1.57	2.07	2.48	2.97	3.54	4.11
7600	**	**	**	**	**	**	**	**	**	**	**	**	**	**	**	**	**	**	**	**	**	**	**	**	0.00	0.42	0.81	1.31	1.61	2.12	2.55	3.05	3.63	4.22
7800	**	**	**	**	**	**	**	**	**	**	**	**	**	**	**	**	**	**	**	**	**	**	**	**	0.00	0.43	0.83	1.35	1.65	2.18	2.61	3.13	3.73	4.33
8000	**	**	**	**	**	**	**	**	**	**	**	**	**	**	**	**	**	**	**	**	**	**	**	**	0.00	0.45	0.85	1.38	1.70	2.24	2.68	3.21	3.82	4.44

* = Diameters below RMA minimum for other than Cog-Belt V-belts. Use with Super Blue Ribbon or Aramax V-belts will result in reduced life and loss of efficiency.

⚠**WARNING** ** = sheave rim speeds in excess of 6,000 feet per minute — see page 236

CLASSICAL SECTION BASIC HORSEPOWER RATINGS TABLES

Super Blue Ribbon (BP) — Super II (B) — GOLD RIBBON Cog-Belt (BX)

RPM of Faster Shaft	RATED HORSEPOWER PER BELT FOR SMALL SHEAVE DATUM DIAMETER																										
	4.00 *			4.20 *			4.40 *			4.60 *			5.00			5.20			5.40			5.60			6.00		
	BP	B	BX	BP	B	BX	BP	B	BX	BP	B	BX	BP	B	BX	BP	B	BX	BP	B	BX	BP	B	BX	BP	B	BX
725	2.07	2.59	3.29	2.33	2.83	3.51	2.59	3.07	3.72	2.85	3.31	3.94	3.37	3.78	4.37	3.62	4.02	4.58	3.87	4.25	4.79	4.13	4.49	5.00	4.63	4.95	5.41
870	2.35	2.96	3.79	2.66	3.25	4.04	2.96	3.53	4.30	3.27	3.81	4.55	3.87	4.37	5.04	4.17	4.64	5.29	4.47	4.91	5.53	4.76	5.19	5.78	5.35	5.72	6.26
950	2.50	3.16	4.05	2.83	3.47	4.33	3.16	3.77	4.60	3.48	4.07	4.87	4.13	4.67	5.40	4.46	4.97	5.66	4.78	5.26	5.93	5.09	5.55	6.19	5.73	6.13	6.70
1160	2.84	3.65	4.71	3.24	4.01	5.03	3.63	4.37	5.35	4.02	4.73	5.67	4.78	5.43	6.29	5.16	5.78	6.60	5.54	6.13	6.91	5.92	6.47	7.21	6.66	7.15	7.81
1425	3.22	4.20	5.47	3.69	4.63	5.85	4.15	5.06	6.23	4.61	5.48	6.60	5.52	6.30	7.33	5.97	6.71	7.69	6.41	7.12	8.04	6.85	7.52	8.39	7.72	8.31	9.08
1750	3.60	4.80	6.32	4.15	5.30	6.76	4.70	5.79	7.20	5.23	6.28	7.63	6.30	7.25	8.47	6.82	7.72	8.88	7.33	8.19	9.29	7.84	8.65	9.69	8.85	9.56	10.47
2850	4.20	6.11	8.50	4.96	6.80	9.09	5.70	7.47	9.66	6.43	8.12	10.22	7.84	9.37	11.29	8.52	9.97	11.80	9.18	10.56	12.29	9.81	11.12	12.76	11.03	12.19	13.66
3450	4.04	6.36	9.24	4.87	7.09	9.86	5.67	7.80	10.46	6.44	8.48	11.03	7.89	9.76	12.10	8.58	10.35	12.60	9.23	10.92	13.06	9.85	11.45	13.50	11.00	12.43	14.30
100	0.44	0.52	0.64	0.49	0.56	0.68	0.53	0.61	0.72	0.57	0.65	0.76	0.66	0.73	0.84	0.70	0.77	0.88	0.75	0.81	0.91	0.79	0.85	0.95	0.87	0.93	1.03
200	0.78	0.93	1.16	0.86	1.01	1.23	0.94	1.09	1.30	1.02	1.16	1.37	1.19	1.31	1.51	1.27	1.39	1.58	1.35	1.47	1.65	1.43	1.54	1.72	1.59	1.69	1.86
300	1.07	1.30	1.62	1.19	1.41	1.72	1.31	1.52	1.82	1.43	1.63	1.92	1.66	1.85	2.13	1.78	1.95	2.23	1.89	2.06	2.33	2.01	2.17	2.42	2.24	2.39	2.62
400	1.34	1.63	20.5	1.49	1.77	2018	1.64	1.92	2.31	1.80	2.06	2.44	2.10	2.34	2.70	2.25	2.48	2.83	2.40	2.62	2.95	2.55	2.76	3.08	2.85	3.04	3.33
500	1.58	1.94	2.45	1.77	2.12	2.61	1.96	2.29	2.77	2.14	2.47	2.93	2.51	2.81	3.24	2.70	2.96	3.39	2.88	3.15	3.55	3.06	3.32	3.70	3.42	3.66	4.01
600	1.81	2.24	2.83	2.03	2.44	3.02	2.25	2.65	3.20	2.47	2.85	3.39	2.90	3.26	3.75	3.12	3.46	3.93	3.33	3.65	4.11	3.55	3.85	4.29	3.98	4.25	4.65
700	2.02	2.52	3.20	2.27	2.75	3.41	2.53	2.99	3.62	2.78	3.22	3.83	3.28	3.68	4.25	3.52	3.91	4.45	3.77	4.14	4.66	4.01	4.36	4.86	4.50	4.81	5.26
800	2.22	2.79	3.55	2.50	3.05	3.79	2.79	3.31	4.02	3.07	3.57	4.26	3.63	4.09	4.72	3.91	4.35	4.95	4.18	4.60	5.18	4.46	4.85	5.41	5.01	5.36	5.86
900	2.41	3.04	3.89	2.72	3.33	4.15	3.04	3.62	4.41	3.35	3.91	4.67	3.97	4.48	5.18	4.28	4.76	5.43	4.58	5.05	5.68	4.89	5.33	5.93	5.49	5.88	6.42
1000	2.58	3.28	4.21	2.93	3.60	4.50	3.27	3.92	4.78	3.62	4.23	5.06	4.29	4.86	5.62	4.63	5.17	5.89	4.96	5.47	6.17	5.30	5.78	6.44	5.96	6.38	6.97
1100	2.75	3.52	4.53	3.12	3.86	4.84	3.50	4.20	5.14	3.87	4.55	5.44	4.60	5.22	6.04	4.97	5.55	6.34	5.33	5.89	6.63	5.69	6.22	6.92	6.40	6.87	7.50
1200	2.90	3.74	4.83	3.31	4.11	5.16	3.71	4.48	5.49	4.11	4.85	5.81	4.90	5.57	6.45	5.29	5.93	6.77	5.68	6.28	7.08	6.07	6.63	7.40	5.83	7.33	8.01
1300	3.05	3.95	5.12	3.48	4.35	5.47	3.91	4.74	5.82	4.34	5.13	6.17	5.18	5.90	6.85	5.60	6.29	7.19	6.02	6.66	7.52	6.43	7.04	7.85	7.24	7.78	8.50
1400	3.19	4.15	5.40	3.65	4.58	5.78	4.11	4.99	6.15	4.56	5.41	6.51	5.45	6.23	7.23	5.90	6.63	7.59	6.33	7.03	7.94	6.77	7.43	8.29	7.63	8.21	8.97
1600	3.44	4.53	5.94	3.95	5.00	6.35	4.46	5.47	6.76	5.96	5.93	7.17	5.95	6.83	7.96	6.44	7.27	8.35	6.93	7.71	8.73	7.41	8.15	9.11	8.35	9.01	9.86
1700	3.55	4.71	6.20	4.09	5.20	6.63	4.62	5.69	7.05	5.15	6.17	7.48	6.19	7.11	8.30	6.70	7.58	8.71	7.20	8.03	9.11	7.70	8.49	9.50	8.69	9.38	10.27
1800	3.65	4.88	6.44	4.21	5.39	6.89	4.77	5.90	7.34	5.32	6.40	7.77	6.40	7.38	8.63	6.93	7.86	9.05	7.46	8.34	9.46	7.98	8.81	9.87	9.00	9.73	10.67
1900	3.74	5.04	6.68	4.33	5.57	7.15	4.91	6.10	7.61	5.48	6.62	8.06	6.61	7.64	8.95	7.16	8.14	9.38	7.70	8.63	9.81	8.24	9.12	10.23	9.30	10.07	11.05
2000	3.83	5.19	6.91	4.44	5.74	7.39	5.04	6.29	7.87	5.63	6.82	8.34	6.80	7.88	9.25	7.37	8.39	9.70	7.93	8.90	10.14	8.49	9.40	10.57	9.57	10.38	11.41
2100	3.91	5.33	7.13	4.54	5.90	7.63	5.16	6.47	8.12	5.77	7.02	8.60	6.97	8.11	9.54	7.56	8.64	10.00	8.14	9.16	10.45	8.71	9.67	10.89	9.83	10.67	11.75
2200	3.97	5.46	7.34	4.63	6.05	7.85	5.27	6.63	8.36	5.90	7.21	8.85	7.14	8.32	9.82	7.74	8.87	10.29	8.34	9.40	10.75	8.92	9.93	11.20	10.06	10.95	12.07
2300	4.03	5.59	7.54	4.70	6.19	8.07	5.36	6.79	8.59	6.02	7.38	9.09	7.29	8.52	10.08	7.91	9.08	10.56	8.51	9.63	11.03	9.11	10.16	11.49	10.27	11.20	12.37
2400	4.08	5.70	7.74	4.77	6.33	8.28	5.45	6.94	8.81	6.12	7.54	9.33	7.42	8.71	10.33	8.05	9.28	10.82	8.67	9.83	11.29	9.28	10.38	11.76	10.46	11.43	12.65
2500	4.12	5.81	7.92	4.83	6.45	8.47	5.53	7.08	9.02	6.21	7.69	9.54	7.54	8.88	10.57	8.19	9.46	11.06	8.82	10.03	11.54	9.44	10.58	12.01	10.63	11.64	12.91
2600	4.16	5.91	8.10	4.88	6.5	68.66	5.59	7.20	9.21	6.29	7.83	9.75	7.65	9.04	10.79	8.30	9.63	11.29	8.94	10.20	11.78	9.57	10.76	12.25	10.78	11.83	13.15
2700	4.18	6.00	8.27	4.92	6.66	8.84	5.65	7.32	9.40	6.36	7.95	9.95	7.74	9.19	11.00	8.40	9.78	11.50	9.05	10.36	11.99	9.68	10.92	12.47	10.90	11.99	13.37
2800	4.19	6.07	8.42	4.95	6.75	9.01	5.69	7.42	9.58	6.41	8.07	10.13	7.81	9.31	11.20	8.48	9.91	11.70	9.14	10.49	12.19	9.78	11.06	12.67	10.99	12.13	13.57
2900	4.20	6.14	8.57	4.97	6.84	9.17	5.72	7.51	9.74	6.45	8.17	10.30	7.87	9.43	11.38	8.55	10.03	11.89	9.21	10.61	12.38	9.85	11.18	12.85	11.07	12.25	13.75
3000	4.19	6.21	8.72	4.97	6.91	9.32	5.74	7.59	9.90	6.48	8.25	10.46	7.91	9.52	11.54	8.59	10.13	12.05	9.26	10.71	12.54	9.90	11.28	13.02	11.11	12.34	13.90
3100	4.17	6.26	8.85	4.97	6.97	9.45	5.74	7.66	10.04	6.50	8.33	10.61	7.94	9.60	11.69	8.62	10.21	12.20	9.29	10.79	12.69	9.93	11.35	13.16	11.13	12.40	14.03
3200	4.15	6.30	8.97	4.95	7.02	9.58	5.74	7.71	10.18	6.50	8.39	10.75	7.95	9.67	11.83	8.63	10.27	12.34	9.30	10.85	12.82	9.93	11.41	13.28	11.13	12.44	14.14
3300	4.11	6.33	9.08	4.93	7.06	9.70	5.72	7.76	10.30	6.48	8.44	10.87	7.94	9.72	11.95	8.63	10.32	12.45	9.29	10.90	12.93	9.92	11.44	13.39	11.10	12.46	14.22
3400	4.07	6.35	9.19	4.89	7.08	9.81	5.69	7.79	10.41	6.46	8.47	10.98	7.91	9.75	12.06	8.60	10.35	12.55	9.25	10.92	13.03	9.88	11.46	13.47	11.04	12.45	14.28
3500	4.01	6.36	9.28	4.84	7.10	9.91	5.64	7.81	10.51	6.41	8.49	11.8	7.87	9.76	12.14	8.55	10.35	12.64	9.20	10.92	13.10	9.82	11.45	13.53	10.95	12.41	14.31
3600	3.95	6.36	9.37	4.78	7.10	9.99	5.58	7.81	10.59	6.36	8.49	11.16	7.81	9.76	12.22	8.48	10.34	12.70	9.12	10.89	13.15	9.73	11.41	13.58	10.83	12.34	14.32
3700	3.87	6.35	9.44	4.71	7.10	10.07	5.51	7.81	10.67	6.29	8.48	11.23	7.73	9.74	12.27	8.40	10.31	12.75	9.03	10.85	13.19	9.62	11.35	13.59	10.68	12.24	14.31
3800	3.78	6.33	9.51	4.62	7.08	10.13	5.43	7.78	10.73	6.20	8.46	11.29	7.63	9.70	12.31	8.29	10.26	12.78	8.90	10.78	13.20	9.48	11.27	13.59	10.50	12.12	14.26
3900	3.68	6.30	9.57	4.52	7.05	10.19	5.33	7.75	10.78	6.10	8.42	11.33	7.51	9.64	12.34	8.16	10.19	12.79	8.76	10.70	13.20	9.32	11.16	13.57	**	**	**
4000	3.57	6.26	9.61	4.41	7.00	10.23	5.22	7.70	10.81	5.98	8.36	11.36	7.37	9.56	12.34	8.00	10.09	12.78	8.59	10.58	13.17	9.13	11.03	13.52	**	**	**
4100	3.45	6.21	9.65	4.29	6.95	10.26	5.09	7.64	10.84	5.84	8.29	11.38	7.22	9.46	12.33	7.83	9.98	12.75	8.40	10.45	13.12	**	**	**	**	**	**
4200	3.32	6.15	9.67	4.15	6.88	10.28	4.95	7.56	10.85	5.69	8.20	11.38	7.04	9.35	12.30	7.63	9.84	12.70	8.18	10.29	13.05	**	**	**	**	**	**
4300	3.17	6.07	9.69	4.00	6.79	10.29	4.79	7.47	10.85	5.52	8.10	11.36	6.84	9.21	12.26	7.41	9.68	12.63	**	**	**	**	**	**	**	**	**
4400	3.01	5.98	9.69	3.84	6.70	10.29	4.62	7.37	10.83	5.34	7.98	11.33	6.62	9.05	12.19	7.17	9.50	12.54	**	**	**	**	**	**	**	**	**
4500	2.84	5.88	9.69	3.66	6.59	10.27	4.43	7.25	10.80	5.14	7.85	11.29	6.38	8.87	12.11	**	**	**	**	**	**	**	**	**	**	**	**
4600	2.66	5.77	9.67	3.47	6.47	10.24	4.23	7.11	10.76	4.92	7.69	11.23	**	**	**	**	**	**	**	**	**	**	**	**	**	**	**
4700	2.47	5.65	7.64	3.27	6.33	10.20	4.01	6.96	10.70	4.68	7.52	11.15	**	**	**	**	**	**	**	**	**	**	**	**	**	**	**
4800	2.26	5.51	9.60	3.05	6.18	10.15	3.77	6.79	10.63	4.42	7.33	11.06	**	**	**	**	**	**	**	**	**	**	**	**	**	**	**
4900	2.04	5.37	9.55	2.81	6.02	10.08	3.52	6.61	10.55	4.15	7.13	10.96	**	**	**	**	**	**	**	**	**	**	**	**	**	**	**
5000	1.81	5.21	9.49	2.56	5.84	10.00	3.25	6.41	10.45	**	**	**	**	**	**	**	**	**	**	**	**	**	**	**	**	**	**
5200	1.30	4.85	9.33	2.02	5.44	9.80	2.66	5.96	10.20	**	**	**	**	**	**	**	**	**	**	**	**	**	**	**	**	**	**
5400	0.74	4.43	9.12	1.41	4.98	9.55	**	**	**	**	**	**	**	**	**	**	**	**	**	**	**	**	**	**	**	**	**
5600	0.12	3.96	8.86	**	**	**	**	**	**	**	**	**	**	**	**	**	**	**	**	**	**	**	**	**	**	**	**

* = Diameters below RMA minimum for other than Cog-Belt V-belts. Use with Super Blue Ribbon or Aramax V-belts will result in reduced life and loss of efficiency.

⚠**WARNING** ** = sheave rim speeds in excess of 6,000 feet per minute — see page 236

CLASSICAL SECTION BASIC HORSEPOWER RATINGS TABLES

Super Blue Ribbon (BP) — Super II (B) — GOLD RIBBON Cog-Belt (BX)

RATED HORSEPOWER PER BELT FOR SMALL SHEAVE DATUM DIAMETER															RPM of Faster Shaft	ADD-ON HP FOR SPEED RATIO									
6.40			6.80			7.40			8.60			9.40				1.00 to 1.01	1.02 to 1.03	1.04 to 1.06	1.07 to 1.08	1.09 to 1.12	1.13 to 1.16	1.17 to 1.22	1.23 to 1.32	1.33 to 1.50	1.51 and over
BP	B	BX	BP	B	BX	BP	B	BX	BP	B	BX	BP	B	BX											
5.13	5.41	5.82	5.62	5.86	6.23	6.35	6.54	6.83	7.79	7.85	7.99	8.73	8.71	8.75	7.25	0.00	0.04	0.08	0.13	0.15	0.20	0.24	0.29	0.35	0.40
5.93	6.26	6.73	6.50	6.79	7.20	7.36	7.57	7.89	9.02	9.09	9.23	10.10	10.07	10.09	870	0.00	0.05	0.09	0.15	0.18	0.24	0.29	0.35	0.42	0.48
6.35	6.71	7.21	6.97	7.27	7.71	7.88	8.11	8.44	9.67	9.73	9.87	10.82	10.79	10.79	950	0.00	0.05	0.10	0.16	0.20	0.27	0.32	0.38	0.45	0.53
7.39	7.82	8.40	8.12	8.48	8.97	9.18	9.45	9.82	11.25	11.32	11.45	12.58	12.52	12.49	1160	0.00	0.06	0.12	0.20	0.25	0.32	0.39	0.47	0.55	0.64
8.58	9.09	9.76	7.42	9.85	10.42	10.65	10.96	11.39	13.01	13.09	13.22	14.50	14.42	14.36	1425	0.00	0.08	0.15	0.25	0.30	0.40	0.48	0.57	0.68	0.79
9.83	10.44	11.24	10.78	11.30	11.98	12.17	12.55	1304	14.77	14.86	15.02	16.36	16.27	16.21	1750	0.00	0.10	0.19	0.30	0.37	0.49	0.59	0.70	0.84	0.97
12.17	13.18	14.49	13.23	14.10	15.24	14.64	15.30	16.23	**	**	**	**	**	**	2850	0.00	0.16	0.30	0.49	0.60	0.80	0.96	1.14	1.36	1.58
12.00	13.27	14.98	**	**	**	**	**	**	**	**	**	**	**	**	3450	0.00	0.19	0.37	0.60	0.73	0.96	1.16	1.38	1.65	1.92
0.96	1.01	1.10	1.04	1.09	1.18	1.17	1.21	1.29	1.42	1.44	1.51	1.58	1.59	1.65	100	0.00	0.01	0.01	0.02	0.02	0.03	0.03	0.04	0.05	0.06
1.75	1.84	2.00	1.90	1.99	2.14	2.14	2.21	2.34	2.60	2.64	2.74	2.91	2.92	3.00	200	0.00	0.01	0.02	0.03	0.04	0.06	0.07	0.08	0.1.	0.11
2.47	2.60	2.82	2.69	2.81	3.01	3.03	3.12	3.30	3.70	3.75	3.86	4.14	4.15	4.23	300	0.00	0.02	0.03	0.05	0.06	0.08	0.1.	0.12	0.14	0.17
3.14	3.31	3.58	3.44	3.58	3.83	3.87	3.99	4.20	4.74	4.79	4.92	5.30	5.31	5.39	400	0.00	0.02	0.04	0.07	0.08	0.11	0.13	0.16	0.19	0.22
3.79	3.99	4.31	4.14	4.32	4.61	4.67	4.81	5.05	5.72	5.78	5.92	6.41	6.41	6.48	500	0.00	0.03	0.05	0.09	0.11	0.14	0.17	0.20	0.24	0.28
4.40	4.64	5.00	4.82	5.02	5.35	5.44	5.60	5.86	6.67	6.73	6.87	7.47	7.46	7.52	600	0.00	0.03	0.06	0.10	0.13	0.17	0.20	0.24	0.29	0.33
4.98	5.26	5.66	5.46	5.70	6.06	6.17	6.35	6.64	7.57	7.63	7.77	8.48	8.47	8.51	700	0.00	0.04	0.07	0.12	0.15	0.20	0.23	0.28	0.33	0.39
5.55	5.85	6.30	6.08	6.35	6.74	6.88	7.08	7.38	8.44	8.50	8.64	9.45	9.43	9.46	800	0.00	0.04	0.08	0.14	0.17	0.22	0.27	0.32	0.38	0.44
6.09	6.43	6.91	6.68	6.97	7.39	7.56	7.77	6.10	9.27	9.33	9.47	10.38	10.34	10.36	900	0.00	0.05	0.1.	0.16	0.19	0.25	0.30	0.36	0.43	0.50
6.61	6.98	7.50	7.25	7.57	8.02	8.20	8.44	8.78	10.06	10.13	10.26	11.26	11.22	11.21	1000	0.00	0.06	0.11	0.17	0.21	0.28	0.34	0.40	0.48	0.56
7.11	7.51	8.07	7.80	8.14	8.62	8.82	9.08	9.44	10.81	10.88	11.02	12.10	12.04	12.02	1100	0.00	0.06	0.12	0.19	0.23	0.31	0.37	0.44	0.53	0.61
7.58	8.02	8.61	8.32	8.69	9.20	9.42	9.69	10.07	11.53	11.60	11.74	12.89	12.83	12.79	1200	0.00	0.07	0.13	0.21	0.25	0.34	0.40	0.48	0.57	0.67
8.04	8.51	9.14	8.83	9.22	9.76	9.96	10.27	10.67	12.21	12.29	12.42	13.63	13.57	13.52	1300	0.00	0.07	0.14	0.22	0.28	0.36	0.44	0.52	0.62	0.72
8.47	8.97	9.64	9.30	9.73	10.29	10.52	10.83	11.25	12.85	12.93	13.06	14.33	14.26	14.20	1400	0.00	0.08	0.15	0.24	0.30	0.39	0.47	0.56	0.67	0.78
9.28	9.85	10.58	10.19	10.66	11.29	11.51	11.85	12.32	14.01	14.10	14.24	15.57	15.49	15.42	1600	0.00	0.09	0.17	0.28	0.34	0.45	0.54	0.64	0.76	0.89
9.65	10.25	11.02	10.59	11.10	11.75	11.96	12.32	12.81	14.53	14.62	14.77	16.11	16.02	15.96	1700	0.00	0.09	0.18	0.29	0.36	0.48	0.57	0.68	0.81	0.94
10.00	10.63	11.44	10.97	11.50	12.19	12.37	12.76	13.27	15.00	15.10	15.25	16.60	16.51	15.44	1800	0.00	0.10	0.19	0.31	0.38	0.50	0.60	0.72	0.86	1.00
10.32	10.99	11.84	11.32	11.88	12.61	12.76	13.17	13.70	15.42	15.53	15.70	17.03	16.94	16.88	1900	0.00	0.11	0.20	0.33	0.40	0.53	0.64	0.76	0.91	1.06
10.63	11.33	12.22	11.65	12.24	13.00	13.11	13.54	14.11	15.80	15.91	16.10	17.39	17.31	17.26	2000	0.00	0.11	0.21	0.35	0.42	0.56	0.67	0.80	0.96	1.11
10.91	11.64	12.57	11.95	12.57	13.36	13.43	13.89	14.48	16.13	13.25	13.47	17.70	17.61	17.59	2100	0.00	0.12	0.22	0.36	0.44	0.59	0.70	0.84	1.00	1.17
11.16	11.93	12.91	12.22	12.87	13.70	13.72	14.19	14.82	16.40	16.54	16.78	17.94	17.86	17.86	2200	0.00	0.12	0.23	0.38	0.47	0.62	0.74	0.88	1.05	0.22
11.39	12.19	13.21	12.46	13.14	14.02	13.97	14.47	15.13	16.63	16.78	17.05	18.12	18.04	18.08	2300	0.00	0.13	0.24	0.40	0.49	0.64	0.77	0.92	1.10	1.28
11.59	12.43	13.50	12.67	13.38	14.30	14.18	14.71	15.41	16.80	16.96	17.27	18.22	18.16	18.23	2400	0.00	0.13	0.25	0.41	0.51	0.67	0.80	0.96	1.15	1.33
11.77	12.65	13.76	12.85	13.60	14.56	14.35	14.91	15.65	16.91	17.09	17.44	**	**	**	2500	0.00	0.14	0.26	0.43	0.53	0.70	0.84	1.00	1.19	1.39
11.92	12.83	14.00	13.00	13.78	14.79	14.49	15.07	15.86	16.96	17.17	17.56	**	**	**	2600	0.00	0.14	0.28	0.45	0.55	0.73	0.87	1.04	1.24	1.44
12.04	12.99	14.22	13.11	13.93	14.99	14.58	15.19	16.03	**	**	**	**	**	**	2700	0.00	0.15	0.29	0.47	0.57	0.75	0.91	1.08	1.29	1.50
12.14	13.13	14.40	13.20	14.05	15.17	14.63	15.26	13.17	**	**	**	**	**	**	2800	0.00	0.16	0.30	0.48	0.59	0.78	0.94	1.12	1.34	1.56
12.20	13.23	14.57	13.25	14.13	15.31	14.64	15.32	16.27	**	**	**	**	**	**	2900	0.00	0.16	0.31	0.50	0.61	0.81	0.97	1.16	1.39	1.61
12.24	13.31	14.70	13.26	14.19	15.42	14.61	15.32	16.33	**	**	**	**	**	**	3000	0.00	0.17	0.32	0.52	0.64	0.84	1.01	1.20	1.43	1.67
12.24	13.36	14.81	13.24	14.20	15.50	**	**	**	**	**	**	**	**	**	3100	0.00	0.17	0.33	0.54	0.66	0.87	1.04	1.24	1.48	1.72
12.21	13.37	14.90	13.18	14.19	15.55	**	**	**	**	**	**	**	**	**	3200	0.00	0.18	0.34	0.55	0.68	0.89	1.07	1.28	1.53	1.78
12.15	13.36	14.95	13.09	14.13	15.57	**	**	**	**	**	**	**	**	**	3300	0.00	0.18	0.35	0.57	0.70	0.92	1.11	1.32	1.58	1.83
12.06	13.31	14.98	**	**	**	**	**	**	**	**	**	**	**	**	3400	0.00	0.19	0.36	0.59	0.72	0.59	1.14	1.36	1.62	1.89
11.94	13.23	14.97	**	**	**	**	**	**	**	**	**	**	**	**	3500	0.00	0.19	0.37	0.60	0.74	0.98	1.17	1.40	1.67	1.94
**	**	**	**	**	**	**	**	**	**	**	**	**	**	**	3600	0.00	0.20	0.38	0.62	0.76	1.01	1.21	1.44	1.72	2.00
**	**	**	**	**	**	**	**	**	**	**	**	**	**	**	3700	0.00	0.21	0.39	0.64	0.78	1.03	1.24	1.48	1.77	2.06
**	**	**	**	**	**	**	**	**	**	**	**	**	**	**	3800	0.00	0.21	0.40	0.66	0.81	1.06	1.27	1.52	1.82	2.11
**	**	**	**	**	**	**	**	**	**	**	**	**	**	**	3900	0.00	0.22	0.41	0.67	0.83	1.09	1.31	1.56	1.86	2.17
**	**	**	**	**	**	**	**	**	**	**	**	**	**	**	4000	0.00	0.22	0.42	0.69	0.85	1.12	1.34	1.60	1.91	2.22
**	**	**	**	**	**	**	**	**	**	**	**	**	**	**	4100	0.00	0.23	0.43	0.71	0.87	1.15	1.37	1.64	1.96	2.28
**	**	**	**	**	**	**	**	**	**	**	**	**	**	**	4200	0.00	0.23	0.45	0.73	0.89	1.17	1.41	1.68	2.01	2.33
**	**	**	**	**	**	**	**	**	**	**	**	**	**	**	4300	0.00	0.24	0.46	0.74	0.91	1.20	1.44	1.72	2.05	2.39
**	**	**	**	**	**	**	**	**	**	**	**	**	**	**	4400	0.00	0.24	0.47	0.76	0.93	1.23	1.47	1.76	2.10	2.44
**	**	**	**	**	**	**	**	**	**	**	**	**	**	**	4500	0.00	0.25	0.48	0.78	0.95	1.26	1.51	1.80	2.15	2.50
**	**	**	**	**	**	**	**	**	**	**	**	**	**	**	4600	0.00	0.26	0.49	0.79	0.97	1.29	1.54	1.85	2.20	2.56
**	**	**	**	**	**	**	**	**	**	**	**	**	**	**	4700	0.00	0.26	0.50	0.81	1.00	1.31	1.58	1.89	2.25	2.61
**	**	**	**	**	**	**	**	**	**	**	**	**	**	**	4800	0.00	0.27	0.51	0.83	1.02	1.34	1.61	1.93	2.29	2.67
**	**	**	**	**	**	**	**	**	**	**	**	**	**	**	4900	0.00	0.27	0.52	0.85	1.04	1.37	1.64	1.97	2.34	2.72
**	**	**	**	**	**	**	**	**	**	**	**	**	**	**	5000	0.00	0.28	0.53	0.86	1.06	1.40	1.68	2.01	2.39	2.78
**	**	**	**	**	**	**	**	**	**	**	**	**	**	**	5200	0.00	0.29	0.55	0.90	1.10	1.45	1.74	2.09	2.48	2.89
**	**	**	**	**	**	**	**	**	**	**	**	**	**	**	5400	0.00	0.30	0.57	0.93	1.14	1.51	1.81	2.17	2.58	3.00
**	**	**	**	**	**	**	**	**	**	**	**	**	**	**	5600	0.00	0.31	0.59	0.97	1.19	1.57	1.88	2.25	2.68	3.11

* = Diameters below RMA minimum for other than Cog-Belt V-belts. Use with Super Blue Ribbon or Aramax V-belts will result in reduced life and loss of efficiency.

⚠**WARNING** ** = sheave rim speeds in excess of 6,000 feet per minute — see page 236

CLASSICAL SECTION BASIC HORSEPOWER RATINGS TABLES

Super Blue Ribbon (CP) — Super II (C) — GOLD RIBBON Cog-Belt (CX)

RATED HORSEPOWER PER BELT FOR SMALL SHEAVE DATUM DIAMETER

RPM of Faster Shaft	7.00 *			7.50 *			8.00 *			8.50 *			9.00			9.50			10.00			10.50		
	CP	C	CX	CP	C	CX	CP	C	CX	CP	C	CX	CP	C	CX	CP	C	CX	CP	C	CX	CP	C	CX
575	5.86	6.83	8.15	6.70	7.61	8.87	7.52	8.38	9.59	8.34	9.15	10.29	9.15	9.90	11.00	9.96	10.66	11.69	10.76	11.40	12.38	11.55	12.14	13.06
690	6.73	7.88	9.46	7.71	8.79	10.30	8.67	9.70	11.13	9.63	10.59	11.95	10.57	11.47	12.76	11.51	12.34	13.57	12.44	13.21	14.36	13.36	14.06	15.15
725	6.99	8.19	9.84	8.00	9.14	10.72	9.01	10.08	11.58	10.00	11.01	12.44	10.99	11.93	13.28	11.96	12.84	14.12	12.93	13.74	14.95	13.89	14.62	15.76
870	7.98	9.42	11.39	9.16	10.52	12.40	10.33	11.61	13.40	11.48	12.68	14.39	12.62	13.74	15.36	13.74	14.79	16.32	14.85	15.82	17.26	15.95	16.84	18.20
950	8.48	10.06	12.20	9.75	11.24	13.29	11.00	12.40	14.35	12.24	13.55	15.41	13.46	14.68	16.45	14.66	15.80	17.47	15.84	16.89	18.48	17.00	17.97	19.47
1160	9.69	11.61	14.22	11.17	12.99	15.48	12.62	14.33	16.71	14.05	15.66	17.93	15.45	16.95	19.11	16.82	18.22	20.28	18.17	19.47	21.42	19.49	20.69	22.54
1425	10.96	13.32	16.52	12.66	14.89	17.97	14.32	16.43	19.38	15.94	17.93	20.75	17.52	19.38	22.09	19.06	20.80	23.38	20.54	22.17	24.64	21.99	23.49	25.86
1750	12.09	15.00	18.97	14.00	16.76	20.59	15.84	18.46	22.15	17.62	20.09	23.65	19.32	21.65	25.09	20.94	23.14	26.47	22.49	24.55	27.78	23.96	25.89	29.02
100	1.41	1.58	1.84	1.58	1.75	1.99	1.75	1.91	2.15	1.92	2.07	2.30	2.09	2.23	2.45	2.26	2.39	2.61	2.43	2.55	2.76	2.60	2.71	2.91
200	2.51	2.86	3.35	2.84	3.16	3.64	3.16	3.47	3.92	3.48	3.77	4.21	3.80	4.07	4.49	4.12	4.37	4.77	4.43	4.67	5.05	4.75	4.97	5.33
300	3.50	4.01	4.73	3.97	4.45	5.14	4.44	4.89	5.55	4.90	5.33	5.96	5.36	5.76	6.36	5.81	6.19	6.76	6.27	6.62	7.16	6.72	7.04	7.55
400	4.41	5.09	6.03	5.02	5.66	6.56	5.62	6.22	7.08	6.22	6.78	7.60	6.81	7.34	8.12	7.40	7.89	8.63	7.99	8.44	9.14	8.57	8.99	9.65
500	5.26	6.10	7.26	6.00	6.79	7.90	6.73	7.48	8.54	7.46	8.18	9.17	8.18	8.83	9.79	8.89	9.50	10.41	9.60	10.17	11.02	10.31	10.83	11.63
600	6.08	7.06	8.44	6.92	7.87	9.19	7.78	8.67	9.93	8.63	9.47	10.66	9.47	10.25	11.39	10.31	11.03	12.11	11.13	11.80	12.82	11.96	12.57	13.52
700	6.81	7.97	9.57	7.79	8.89	10.42	8.77	9.81	11.26	9.74	10.71	12.09	10.69	11.60	12.91	11.64	12.49	13.73	12.58	13.36	14.53	13.51	14.23	15.33
800	7.51	8.84	10.65	8.61	9.87	11.60	9.70	10.89	12.54	10.78	11.89	13.46	11.85	12.88	14.37	12.90	13.86	15.27	13.95	14.83	16.17	14.98	15.79	17.04
900	8.17	9.66	11.69	9.38	10.79	12.73	10.58	11.91	13.76	11.77	13.01	14.77	12.94	14.10	15.77	14.09	15.17	16.75	15.23	16.23	17.72	16.35	17.27	18.68
1000	8.79	10.44	12.69	10.11	11.67	13.82	11.41	12.88	14.94	12.69	14.08	16.03	13.96	15.25	17.11	15.20	16.40	18.17	16.43	17.54	19.21	17.63	18.66	20.23
1100	9.37	11.19	13.66	10.79	12.51	14.87	12.19	13.81	16.06	13.56	15.08	17.23	14.91	16.33	18.38	16.24	17.56	19.51	17.54	18.77	20.61	18.82	19.95	21.70
1200	9.90	11.89	14.58	11.42	13.29	15.87	12.91	14.67	17.14	14.37	16.03	18.38	15.80	17.35	19.59	17.20	18.65	20.78	18.57	19.92	21.94	19.91	21.15	23.08
1300	10.40	12.55	15.47	12.00	14.03	16.83	13.57	15.49	18.16	15.11	16.91	19.47	16.61	18.30	20.74	18.08	19.65	21.98	19.51	20.97	23.19	20.90	22.26	24.37
1400	10.85	13.17	16.31	12.53	14.73	17.74	14.18	16.25	19.14	15.78	17.73	20.50	17.35	19.18	21.82	18.87	20.58	23.11	20.35	21.94	24.36	21.78	23.26	25.58
1500	11.26	13.74	17.12	13.02	15.37	18.61	14.73	16.95	20.06	16.40	18.49	21.48	18.01	19.98	22.84	19.58	21.42	24.17	21.09	22.81	25.45	22.55	24.15	26.69
1600	11.62	14.28	17.89	13.45	15.97	19.44	15.22	17.60	20.94	16.94	19.18	22.39	18.60	20.71	23.79	20.19	22.17	25.15	21.73	23.58	26.45	23.21	24.93	27.70
1700	11.94	14.77	18.62	13.83	16.51	20.22	15.65	18.19	21.76	17.41	19.80	23.25	19.10	21.35	24.68	20.72	22.84	26.05	22.27	24.25	27.36	23.74	25.60	28.61
1800	12.22	15.22	19.31	14.15	17.00	20.95	16.02	18.71	22.53	17.81	20.35	24.04	19.52	21.92	25.49	21.14	23.41	26.86	22.69	24.82	28.17	24.15	26.15	29.41
1900	12.44	15.62	19.96	14.42	17.44	21.63	16.32	19.18	23.24	18.13	20.83	24.77	19.84	22.40	26.22	21.47	23.88	27.60	23.00	25.27	28.90	24.42	26.57	30.11
2000	12.62	15.97	20.57	14.63	17.82	22.27	16.55	19.58	23.89	18.37	21.24	25.43	20.08	22.80	26.66	21.69	24.26	28.25	23.18	25.61	29.52	24.56	26.86	30.69
2100	12.75	16.28	21.13	14.79	18.14	22.85	16.71	19.91	24.49	18.53	21.56	26.02	20.22	23.10	27.46	21.80	24.53	28.80	23.25	25.83	30.04	24.56	27.01	31.16
2200	12.82	16.53	21.65	14.88	18.41	23.39	16.80	20.17	25.02	18.60	21.81	26.55	20.27	23.31	27.96	21.80	24.69	29.27	23.18	25.93	30.45	**	**	**
2300	12.85	16.74	22.13	14.90	18.61	23.87	16.82	20.36	25.49	18.59	21.97	27.00	20.21	23.43	28.38	21.68	24.74	29.63	**	**	**	**	**	**
2400	12.81	16.89	22.56	14.86	18.76	24.29	16.76	20.48	25.90	18.49	22.04	27.38	20.05	23.44	28.71	21.44	24.68	29.90	**	**	**	**	**	**
2500	12.73	16.99	22.94	14.76	18.83	24.66	16.62	20.52	26.25	18.29	22.03	27.68	19.78	23.35	28.96	**	**	**	**	**	**	**	**	**
2600	12.58	17.03	23.27	14.58	18.85	24.98	16.39	20.48	26.52	18.00	21.92	27.90	**	**	**	**	**	**	**	**	**	**	**	**
2700	12.37	17.02	23.56	14.34	18.79	25.23	16.09	20.36	26.73	**	**	**	**	**	**	**	**	**	**	**	**	**	**	**
2800	12.10	16.94	23.80	14.02	18.66	25.43	15.69	20.16	26.87	**	**	**	**	**	**	**	**	**	**	**	**	**	**	**
2900	11.77	16.81	23.98	13.62	18.47	25.56	**	**	**	**	**	**	**	**	**	**	**	**	**	**	**	**	**	**
3000	11.38	16.61	24.11	13.15	18.20	25.63		**	**	**	**	**	**	**	**	**	**	**	**	**	**	**	**	**
3100	10.91	16.36	24.19		**	**	**	**	**	**	**	**	**	**	**	**	**	**	**	**	**	**	**	**
3200	10.38	16.03	24.21		**	**	**	**	**	**	**	**	**	**	**	**	**	**	**	**	**	**	**	**

* = Diameters below RMA minimum for other than Cog-Belt V-belts. Use with Super Blue Ribbon or Aramax V-belts will result in reduced life and loss of efficiency.

⚠**WARNING** ** = sheave rim speeds in excess of 6,000 feet per minute — see page 236

CLASSICAL SECTION BASIC HORSEPOWER RATINGS TABLES

Super Blue Ribbon (CP) — Super II (C) — GOLD RIBBON Cog Belt (CX)

RATED HORSEPOWER PER BELT FOR SMALL SHEAVE DATUM DIAMETER															RPM of Faster Shaft	ADD-ON HP FOR SPEED RATIO									
11.00			12.00			13.00			14.00			16.00				1.00 to 1.01	1.02 to 1.03	1.04 to 1.06	1.07 to 1.08	1.09 to 1.12	1.13 to 1.16	1.17 to 1.22	1.23 to 1.32	1.33 to 1.50	1.51 and over
CP	C	CX	CP	C	CX	CP	C	CX	CP	C	CX	CP	C	CX											
12.34	12.88	13.73	13.89	14.32	15.07	15.42	15.75	16.37	16.93	17.15	17.66	19.86	19.87	20.16	575	0.00	0.07	0.14	0.23	0.29	0.38	0.45	0.54	0.64	0.75
14.27	14.91	15.93	16.06	16.58	17.46	17.82	18.21	18.96	19.54	19.81	20.42	22.87	22.89	23.25	690	0.00	0.09	0.17	0.28	0.34	0.45	0.54	0.65	0.77	0.90
14.83	15.50	16.57	16.69	17.23	18.16	18.51	18.92	19.71	20.30	20.58	21.22	23.73	23.76	24.14	725	0.00	0.09	0.18	0.29	0.36	0.48	0.57	0.68	0.81	0.94
17.03	17.84	19.12	19.15	19.80	20.92	21.21	21.71	22.66	23.20	23.55	24.36	27.00	27.05	27.57	870	0.00	0.11	0.22	0.35	0.43	0.57	0.68	0.82	0.97	1.13
18.15	19.04	20.44	20.39	21.11	22.34	22.56	23.11	24.18	24.65	25.04	25.95	28.59	28.66	29.28	950	0.00	0.12	0.24	0.38	0.47	0.62	0.75	0.89	1.06	1.24
20.78	21.88	23.63	23.27	24.17	25.74	25.64	26.35	27.75	27.88	28.41	29.64	31.96	32.13	33.10	1160	0.00	0.15	0.29	0.47	0.58	0.76	0.91	1.09	1.30	1.51
23.38	24.77	27.04	26.02	27.18	29.28	28.45	29.40	31.33	30.66	31.40	33.21	34.37	34.74	36.39	1425	0.00	0.19	0.35	0.58	0.71	0.93	1.12	1.34	1.60	1.86
25.35	27.15	30.20	27.86	29.42	32.34	30.00	31.34	34.18	**	**	**	**	**	**	1750	0.00	0.23	0.43	0.71	0.87	1.15	1.37	1.65	1.96	2.28
2.76	2.87	3.06	3.10	3.18	3.35	3.43	3.50	3.65	3.75	3.81	3.94	4.40	4.42	4.51	100	0.00	0.01	0.02	0.04	0.05	0.07	0.08	0.09	0.11	0.13
5.06	5.26	5.60	5.68	5.85	6.15	6.30	6.43	6.69	6.91	7.00	7.22	8.12	8.14	8.28	200	0.00	0.03	0.05	0.08	0.10	0.13	0.16	0.19	0.22	0.26
7.17	7.46	7.94	8.06	8.30	8.72	8.95	9.13	9.49	9.82	9.95	10.25	11.55	11.58	11.74	300	0.00	0.04	0.07	0.12	0.15	0.20	0.24	0.28	0.34	0.39
9.15	9.53	10.15	10.29	10.60	11.14	11.43	11.66	12.12	12.55	12.71	13.08	14.75	14.76	14.98	400	0.00	0.05	0.010	0.16	0.20	0.26	0.31	0.38	0.45	0.52
11.01	11.48	12.23	12.39	12.77	13.43	13.76	14.05	14.60	15.11	15.30	15.75	17.75	17.76	18.01	500	0.00	0.07	0.12	0.20	0.25	0.33	0.39	0.47	0.56	0.65
12.77	13.33	14.22	14.38	14.83	15.60	15.96	16.30	16.95	17.51	17.74	18.27	20.54	20.55	20.85	600	0.00	0.08	0.15	0.24	0.30	0.39	0.47	0.56	0.67	0.78
14.43	15.08	16.11	16.24	16.77	17.66	18.02	18.42	19.17	19.76	20.03	20.65	23.12	23.14	23.51	700	0.00	0.09	0.17	0.28	0.35	0.46	0.55	0.66	0.78	0.91
15.99	16.74	17.91	17.99	18.59	19.61	19.94	20.40	21.27	21.84	22.16	22.88	25.48	25.52	25.97	800	0.00	0.10	0.20	0.32	0.40	0.52	0.63	0.75	0.90	1.04
17.46	18.30	19.62	19.62	20.30	21.46	21.73	22.24	23.24	23.76	24.12	24.96	27.62	27.67	28.23	900	0.00	0.12	0.22	0.36	0.45	0.59	0.71	0.85	1.01	1.17
18.82	19.75	21.24	21.13	21.89	23.20	23.36	23.94	25.08	25.50	25.92	26.89	29.50	29.59	30.28	1000	0.00	0.13	0.25	0.40	0.50	0.66	0.79	0.94	1.12	1.30
20.08	21.11	22.76	22.51	23.35	24.82	24.83	25.49	26.79	27.05	27.53	28.66	31.12	31.26	32.11	1100	0.00	0.14	0.27	0.45	0.55	0.72	0.86	1.03	1.23	1.43
21.22	22.36	24.19	23.75	24.69	26.33	26.15	26.89	28.35	28.40	28.95	30.26	32.47	32.66	33.71	1200	0.00	0.16	0.30	0.49	0.60	0.79	0.94	1.13	1.34	1.56
22.26	23.50	25.52	24.85	25.89	27.72	27.28	28.11	29.77	29.54	30.17	31.69	33.51	33.77	35.06	1300	0.00	0.17	0.32	0.53	0.65	0.85	1.02	1.22	1.46	1.69
23.17	24.53	26.75	25.80	26.94	28.98	28.24	29.16	31.04	30.46	31.18	32.93	34.24	34.58	36.16	1400	0.00	0.18	0.35	0.57	0.70	0.92	1.10	1.32	1.57	1.82
23.96	25.44	27.88	26.60	27.85	30.11	29.00	30.03	32.15	31.15	31.97	33.98	**	**	**	1500	0.00	0.20	0.37	0.61	0.74	0.98	1.18	1.41	1.68	1.95
24.62	26.22	28.89	27.23	28.60	31.11	29.56	30.71	33.09	31.59	32.52	34.83	**	**	**	1600	0.00	0.21	0.40	0.65	0.79	1.05	1.26	1.50	1.79	2.08
25.14	26.87	29.79	27.69	29.19	31.97	29.91	31.18	33.86	**	**	**	**	**	**	1700	0.00	0.22	0.42	0.69	0.84	1.11	1.34	1.60	1.90	2.21
25.52	27.39	30.58	27.98	29.60	32.67	**	**	**	**	**	**	**	**	**	1800	0.00	0.23	0.45	0.73	0.89	1.18	1.41	1.69	2.02	2.34
25.75	27.76	31.24	28.07	29.84	33.23	**	**	**	**	**	**	**	**	**	1900	0.00	0.25	0.47	0.77	0.94	1.24	1.49	1.79	2.13	2.47
25.82	27.99	31.77	**	**	**	**	**	**	**	**	**	**	**	**	2000	0.00	0.26	0.50	0.81	0.99	1.31	1.57	1.88	2.24	2.60
**	**	**	**	**	**	**	**	**	**	**	**	**	**	**	2100	0.00	0.27	0.52	0.85	1.04	1.38	1.65	1.97	2.35	2.73
**	**	**	**	**	**	**	**	**	**	**	**	**	**	**	2200	0.00	0.29	0.55	0.89	1.09	1.44	1.73	2.07	2.46	2.86
**	**	**	**	**	**	**	**	**	**	**	**	**	**	**	2300	0.00	0.30	.057	0.93	1.14	1.51	1.81	2.16	2.58	3.00
**	**	**	**	**	**	**	**	**	**	**	**	**	**	**	2400	0.00	0.31	0.60	0.97	1.19	1.57	1.89	2.26	2.69	3.13
**	**	**	**	**	**	**	**	**	**	**	**	**	**	**	2500	0.00	0.33	0.62	1.01	1.24	1.64	1.96	2.35	2.80	3.26
**	**	**	**	**	**	**	**	**	**	**	**	**	**	**	2600	0.00	0.34	0.65	1.05	1.29	1.70	2.04	2.44	2.91	3.39
**	**	**	**	**	**	**	**	**	**	**	**	**	**	**	2700	0.00	0.35	0.67	1.09	1.34	1.77	2.12	2.54	3.02	3.52
**	**	**	**	**	**	**	**	**	**	**	**	**	**	**	2800	0.00	0.37	0.70	1.13	1.39	1.83	2.20	2.63	3.14	3.65
**	**	**	**	**	**	**	**	**	**	**	**	**	**	**	2900	0.00	0.38	0.72	1.17	1.44	1.90	2.28	2.73	3.25	3.78
**	**	**	**	**	**	**	**	**	**	**	**	**	**	**	3000	0.00	0.39	0.75	1.21	1.49	1.97	2.36	2.82	3.36	3.91
**	**	**	**	**	**	**	**	**	**	**	**	**	**	**	3100	0.00	0.40	0.77	1.25	1.54	2.03	2.44	2.91	3.47	4.04
**	**	**	**	**	**	**	**	**	**	**	**	**	**	**	3200	0.00	0.42	0.80	1.30	1.59	2.10	2.51	3.01	3.58	4.17

* = Diameters below RMA minimum for other than Cog-Belt V-belts. Use with Super Blue Ribbon or Aramax V-belts will result in reduced life and loss of efficiency.

⚠**WARNING** ** = sheave rim speeds in excess of 6,000 feet per minute — see page 236

SAFETY NOTE ⚠WARNING

FAILURE TO FOLLOW RECOMMENDED APPLICATION INFORMATION AND RECOMMENDED PROCEDURES FOR INSTALLATION, CARE, MAINTENANCE AND STORAGE OF PRODUCTS MAY RESULT IN FAILURE TO PERFORM PROPERLY AND MAY RESULT IN DAMAGE TO PROPERTY AND SERIOUS BODILY INJURY. MAKE SURE THAT PRODUCT SELECTED FOR ANY APPLICATION IS RECOMMENDED FOR THAT SERVICE.

APPLICATION INFORMATION IS GIVEN WITH THE PRODUCTS LISTED IN THIS CATALOG. REFER TO THE SAFETY AND TECHNICAL DATA SECTIONS OF THIS CATALOG FOR INFORMATION REGARDING SAFETY,CARE, MAINTENANCE AND STORAGE OR CONTACT CARLISLE OR YOUR CARLISLE DISTRIBUTOR FOR ASSISTANCE OR SPECIFIC RECOMMENDATIONS.

CARLISLE LIMITED WARRANTY

Products manufactured by Carlisle are warranted to be free from defects in material and workmanship under normal operating conditions of recommended usage for a period of 12 months after shipment. Carlisle's liability under this warranty is limited to the purchase price or, at its option, the repair or replacement of any product which is determined by Carlisle to its satisfaction to be defective upon return to Carlisle, transportation charges prepaid, with Carlisle's prior written authorization. This warranty does not apply to any product which has been improperly installed, maintained, or has been subjected to improper operation or use.

EXCEPT AS EXPRESSLY STATED ABOVE, CARLISLE MAKES NO WARRANTY, EXPRESS OR IMPLIED, WHETHER OF MERCHANTABILITY OF FITNESS FOR ANY PARTICULAR PURPOSE OR USE OR OTHERWISE OF THE PRODUCTS, OR ON ANY PARTS OR LABOR FURNISHED DURING THE SALE, DELIVERY OR SERVICING OF THE PRODUCTS. IN NO EVENT SHALL CARLISLE BE LIABLE TO BUYER FOR ANY SPECIAL, INDIRECT, INCIDENTAL OR CONSEQUENTIAL DAMAGES ARISING OUT OF, OR AS THE RESULT OF, THE SALE, DELIVERY, SERVICING, USE OR LOSS OF USE OF THE PRODUCTS OR ANY PART THEREOF, OR FOR ANY CHARGES OR EXPENSES OF ANY NATURE INCURRED WITHOUT CARLISLE'S WRITTEN CONSENT. IN NO EVENT SHALL CARLISLE'S LIABILITY UNDER ANY CLAIM MADE BY BUYER EXCEED THE PURCHASE PRICE OF THE PRODUCTS IN RESPECT OF WHICH DAMAGES ARE CLAIMED, EVEN IF CARLISLE HAS BEEN PROVIDED WITH NOTICE OF POTENTIAL LOSS.

CLASSICAL SECTION BASIC HORSEPOWER RATINGS TABLES

Super Blue Ribbon (DP) — GOLD RIBBON Cog-Belt (DX)

RPM of Faster Shaft	RATED HORSEPOWER PER BELT FOR SMALL SHEAVE DATUM DIAMETER									
	12.00 DP DX	13.00 DP DX	13.50 DP DX	14.00 DP DX	14.50 DP DX	15.00 DP DX	15.50 DP DX	16.00 DP DX	18.00 DP DX	22.00 DP DX
435	15.02	17.29	18.41	19.53	20.64	21.75	22.85	23.94	28.24	36.53
485	16.33	18.82	20.05	21.27	22.48	23.69	24.89	26.08	30.76	39.70
575	18.55	21.40	22.81	24.21	25.60	26.97	28.33	29.68	34.97	44.94
690	21.13	24.40	26.02	27.61	29.19	30.75	32.30	33.82	39.74	50.64
725	21.85	25.25	26.92	28.57	30.20	31.81	33.40	34.97	41.05	52.14
870	24.56	28.39	30.26	32.10	33.92	35.70	37.45	39.16	45.70	57.07
950	25.84	29.87	31.83	33.75	35.64	37.48	39.29	41.06	47.71	58.84
1160	28.43	32.81	34.92	36.96	38.93	40.84	42.68	44.46	50.84	**
1425	29.95	34.40	36.47	38.42	40.27	42.00	43.61	45.10	**	**
1750	28.78	32.60	**	**	**	**	**	**	**	**
100	4.47	5.08	5.38	5.69	5.99	6.29	6.59	6.89	8.09	10.44
200	8.01	9.16	9.73	10.30	10.86	11.43	11.99	12.55	14.78	19.15
300	11.18	12.82	13.64	14.46	15.27	16.07	16.88	17.68	20.85	27.03
400	14.06	16.18	17.23	18.27	19.31	20.34	21.36	22.38	26.41	34.19
500	16.71	19.26	20.52	21.78	23.02	24.26	25.48	26.70	31.49	40.62
600	19.13	22.08	23.54	24.98	26.41	27.83	29.24	30.63	36.07	46.27
700	21.34	24.65	26.28	27.89	29.48	31.06	32.62	34.16	40.12	51.08
800	23.31	26.95	28.73	30.48	32.22	33.92	35.60	37.26	43.62	54.96
900	25.06	28.97	30.87	32.75	34.59	36.40	38.17	39.91	46.51	57.82
1000	26.56	30.69	32.70	34.66	36.58	38.46	40.29	42.08	48.74	59.58
1100	27.81	32.12	34.19	36.21	38.18	40.09	41.94	43.73	50.28	**
1200	28.79	33.21	35.33	37.37	39.34	41.25	43.08	44.83	51.06	**
1300	29.49	33.97	36.08	38.11	40.06	41.91	43.67	45.34	**	**
1400	29.90	34.36	36.44	38.42	40.29	42.05	43.70	45.23	**	**
1500	30.00	34.37	36.38	38.26	40.01	41.63	**	**	**	**
1600	29.77	33.98	35.87	37.61	**	**	**	**	**	**
1700	29.20	33.17	**	**	**	**	**	**	**	**
1800	28.27	**	**	**	**	**	**	**	**	**
1900	26.97	**	**	**	**	**	**	**	**	**

RPM of Faster Shaft	ADD-ON HP FOR SPEED RATIO									
	1.00 to 1.01	1.02 to 1.03	1.04 to 1.06	1.07 to 1.08	1.09 to 1.12	1.13 to 1.16	1.17 to 1.22	1.23 to 1.32	1.33 to 1.50	1.51 and over
435	0.00	0.16	0.31	0.51	0.62	0.82	0.98	1.17	1.40	1.63
485	0.00	0.18	0.35	0.56	0.69	0.91	1.09	1.31	1.56	1.81
575	0.00	0.22	0.41	0.67	0.82	1.08	1.30	1.55	1.85	2.15
690	0.00	0.26	0.49	0.80	0.98	1.30	1.56	1.86	2.22	2.58
725	0.00	0.27	0.52	0.84	1.03	1.36	1.64	1.96	2.33	2.71
870	0.00	0.33	0.62	1.01	1.24	1.64	1.96	2.35	2.80	3.25
950	0.00	0.36	0.68	1.10	1.35	1.79	2.14	2.56	3.05	3.55
1160	0.00	0.43	0.83	1.35	1.65	2.18	2.62	3.13	3.73	4.34
1425	0.00	0.53	1.02	1.66	2.03	2.68	3.21	3.85	4.58	5.33
1750	0.00	0.66	1.25	2.03	2.50	3.29	3.95	4.72	5.63	6.54
100	0.00	0.04	0.07	0.12	0.14	0.19	0.23	0.27	0.32	0.37
200	0.00	0.07	0.14	0.23	0.29	0.38	0.45	0.54	0.64	0.75
300	0.00	0.11	0.21	0.35	0.43	0.56	0.68	0.81	0.96	1.12
400	0.00	0.15	0.29	0.46	0.57	0.75	0.90	1.08	1.29	1.50
500	0.00	0.19	0.36	0.58	0.71	0.94	1.13	1.35	1.61	1.87
600	0.00	0.22	0.43	0.70	0.86	1.13	1.35	1.62	1.93	2.24
700	0.00	0.26	0.50	0.81	1.00	1.32	1.58	1.89	2.25	2.62
800	0.00	0.30	0.57	0.93	1.14	1.51	1.80	2.16	2.57	2.99
900	0.00	0.34	0.64	1.05	1.28	1.69	2.03	2.43	2.89	3.37
1000	0.00	0.37	0.71	1.16	1.43	1.88	2.26	2.70	3.21	3.74
1100	0.00	0.41	0.78	1.28	1.57	2.07	2.48	2.97	3.54	4.11
1200	0.00	0.45	0.86	1.39	1.71	2.26	2.71	3.24	3.86	4.49
1300	0.00	0.49	0.93	1.51	1.85	2.45	2.93	3.51	4.18	4.86
1400	0.00	0.52	1.00	1.63	2.00	2.63	3.16	3.78	4.50	5.23
1500	0.00	0.56	1.07	1.74	2.14	2.82	3.38	4.05	4.82	5.61
1600	0.00	0.60	1.14	1.86	2.28	3.01	3.61	4.32	5.14	5.98
1700	0.00	0.64	1.21	1.98	2.42	3.20	3.83	4.59	5.46	6.36
1800	0.00	0.67	1.28	2.09	2.57	3.39	4.06	4.86	5.79	6.73
1900	0.00	0.71	1.36	2.21	2.71	3.57	4.29	5.13	6.11	7.10

* = Diameters below RMA minimum for other than Cog-Belt V-belts. Use with Super Blue Ribbon or Aramax V-belts will result in reduced life and loss of efficiency.

⚠**WARNING** ** = sheave rim speeds in excess of 6,000 feet per minute — see page 236

POWER-WEDGE BASIC HORSEPOWER RATINGS TABLES

3VX Power-Wedge Cog-Belt

RPM OF FASTER SHAFT	RATED HORSEPOWER PER BELT FOR SMALL SHEAVE OUTSIDE DIAMETER														
	2.20	2.35	2.50	2.65	2.80	3.00	3.15	3.35	3.65	4.12	4.50	4.75	5.00	5.30	5.60
575	0.55	0.64	0.73	0.83	0.92	1.04	1.13	1.25	1.43	1.72	1.94	2.09	2.24	2.41	2.59
690	0.64	0.75	0.86	0.97	1.08	1.22	1.33	1.48	1.69	2.02	2.29	2.47	2.64	2.85	3.06
725	0.66	0.78	0.90	1.01	1.13	1.28	1.39	1.54	1.77	2.12	2.40	2.58	2.76	2.98	3.20
870	0.77	0.91	1.05	1.18	1.32	1.50	1.63	1.81	2.08	2.49	2.82	3.04	3.26	3.51	3.77
9.50	0.83	0.98	1.13	1.28	1.42	1.62	1.77	1.96	2.25	2.70	3.06	3.29	3.52	3.80	4.08
1160	0.98	1.16	1.34	1.52	1.69	1.93	2.10	2.34	2.68	3.22	3.65	3.93	4.21	4.55	4.88
1425	1.16	1.38	1.59	1.81	2.02	2.31	2.52	2.80	3.22	3.86	4.38	4.72	5.06	5.46	5.86
1750	1.37	1.63	1.89	2.15	2.41	2.75	3.01	3.34	3.85	4.63	5.25	5.65	6.06	6.53	7.01
2850	2.00	2.41	2.81	3.21	3.61	4.14	4.53	5.05	5.82	6.99	7.92	8.53	9.12	9.82	10.50
3450	2.30	2.78	3.26	3.74	4.21	4.82	5.28	5.89	6.78	8.15	9.21	9.90	10.57	11.36	12.12
200	0.22	0.26	0.29	0.33	0.36	0.41	0.44	0.48	0.55	0.66	0.74	0.80	0.85	0.92	0.98
400	0.40	0.47	0.54	0.60	0.67	0.75	0.82	0.91	1.03	1.24	1.40	1.50	1.61	1.73	1.86
600	0.57	0.66	0.76	0.86	0.95	1.08	1.18	1.30	1.49	1.78	2.02	2.17	2.33	2.51	2.69
800	0.72	0.85	0.98	1.10	1.23	1.39	1.52	1.68	1.93	2.31	2.62	2.82	3.02	3.26	3.50
1000	0.87	1.02	1.18	1.34	1.49	1.69	1.85	2.05	2.35	2.82	3.20	3.45	3.69	3.98	4.27
1200	1.01	1.19	1.38	1.56	1.74	1.99	2.17	2.41	2.76	3.32	3.76	4.05	4.34	4.69	5.03
1400	1.14	1.36	1.57	1.78	1.99	2.27	2.48	2.75	3.17	3.80	4.32	4.65	4.98	5.37	5.77
1600	1.27	1.52	1.76	1.99	2.23	2.55	2.78	3.09	3.56	4.28	4.85	5.23	5.60	6.04	6.48
1800	1.40	1.67	1.94	2.20	2.47	2.82	3.08	3.43	3.94	4.74	5.38	5.79	6.21	6.70	7.18
2000	1.52	1.82	2.11	2.40	2.70	3.08	3.37	3.75	4.32	5.19	5.89	6.34	6.79	7.33	7.86
2200	1.64	1.96	2.28	2.60	2.92	3.34	3.65	4.07	4.68	5.63	6.39	6.88	7.37	7.94	8.51
2400	1.75	2.10	2.45	2.80	3.14	3.59	3.93	4.38	5.04	6.06	6.88	7.40	7.92	8.54	9.15
2600	1.87	2.24	2.61	2.98	3.35	3.84	4.20	4.68	5.39	6.48	7.35	7.91	8.47	9.12	9.77
2800	1.97	2.37	2.77	3.17	3.56	4.08	4.47	4.98	5.73	6.89	7.81	8.40	8.99	9.68	10.36
3000	2.08	2.50	2.93	3.35	3.76	4.31	4.72	5.26	6.06	7.29	8.26	8.88	9.50	10.22	10.93
3200	2.18	2.63	3.08	3.52	3.96	4.54	4.98	5.55	6.39	7.68	8.69	9.34	9.99	10.74	11.47
3400	2.28	2.75	3.23	3.69	4.16	4.77	5.22	5.82	6.71	8.05	9.11	9.79	10.46	11.24	12.00
3600	2.37	2.87	3.37	3.86	4.35	4.99	5.46	6.09	7.01	8.42	9.52	10.22	10.91	11.71	12.49
3800	2.47	2.99	3.51	4.02	4.53	5.20	5.70	6.35	7.31	8.77	9.91	10.63	11.34	12.16	12.96
4000	2.56	3.10	3.65	4.18	4.71	5.41	5.92	6.60	7.60	9.11	10.28	11.03	11.75	12.59	13.40
4200	2.64	3.21	3.78	4.33	4.89	5.61	6.15	6.85	7.88	9.44	10.64	11.40	12.14	12.99	13.81
4400	2.73	3.32	3.91	4.48	5.06	5.81	6.36	7.09	8.15	9.75	10.98	11.76	12.51	13.37	14.19
4600	2.81	3.42	4.03	4.63	5.22	6.00	6.57	7.32	8.41	10.05	11.31	12.10	12.85	13.72	**
4800	2.89	3.52	4.15	4.77	5.38	6.18	6.77	7.54	8.66	10.34	11.61	12.41	13.18	**	**
5000	2.96	3.62	4.27	4.91	5.53	6.36	6.96	7.75	8.90	10.61	11.90	12.71	**	**	**
5200	3.03	3.71	4.38	5.04	5.68	6.53	7.15	7.96	9.13	10.87	12.17	12.98	**	**	**
5400	3.10	3.80	4.49	5.16	5.83	6.69	7.33	8.15	9.35	11.11	12.43	**	**	**	**
5600	3.17	3.89	4.59	5.28	5.96	6.85	7.50	8.34	9.56	11.34	**	**	**	**	**
5800	3.23	3.97	4.69	5.40	6.10	7.00	7.66	8.52	9.76	11.55	**	**	**	**	**
6000	3.29	4.05	4.79	5.51	6.22	7.15	7.82	8.69	9.94	11.75	**	**	**	**	**
6200	3.35	4.12	4.88	5.62	6.34	7.28	7.97	8.85	10.11	**	**	**	**	**	**
6400	3.40	4.19	4.96	5.72	6.46	7.41	8.11	9.00	10.27	**	**	**	**	**	**
6600	3.45	4.26	5.05	5.82	6.57	7.54	8.24	9.14	10.42	**	**	**	**	**	**

⚠ **WARNING** ** = Sheave rim speeds in excess of 6,000 feet per minute - see page 236

POWER-WEDGE BASIC HORSEPOWER RATINGS TABLES

3VX Power-Wedge Cog-Belt

					RPM OF FASTER SHAFT	Additional HP per Belt for Speed Ratio									
6.00	6.50	6.90	8.00	10.60		1.00 to 1.01	1.02 to 1.03	1.04 to 1.06	1.07 to 1.09	1.10 to 1.13	1.14 to 1.18	1.19 to 1.25	1.26 to 1.35	1.36 to 1.57	1.58 and over
2.82	3.11	3.34	3.97	5.42	575	0.00	0.01	0.02	0.03	0.03	0.04	0.05	0.06	0.07	0.09
3.33	3.67	3.95	4.69	6.39	690	0.00	0.01	0.02	0.03	0.04	0.05	0.06	0.08	0.09	0.10
3.49	3.84	413	4.90	6.69	725	0.00	0.01	0.02	0.03	0.04	0.06	0.07	0.08	0.09	0.11
4.11	4.53	4.87	5.78	7.87	870	0.00	0.01	0.02	0.04	0.05	0.07	0.08	0.10	0.11	0.13
4.45	4.91	5.27	6.25	8.51	950	0.00	0.01	0.03	0.04	0.06	0.07	0.09	0.11	0.12	0.14
5.32	5.87	6.30	7.47	10.13	1160	0.00	0.02	0.03	0.05	0.07	0.09	0.11	0.13	0.15	0.17
6.38	7.03	7.55	8.94	12.05	1425	0.00	0.02	0.04	0.06	0.09	0.11	0.13	0.16	0.18	0.21
7.63	8.40	9.01	10.64	14.22	1750	0.00	0.03	0.05	0.08	0.11	0.13	0.16	0.20	0.23	0.26
11.40	12.48	13.31	15.46	**	2850	0.00	0.04	0.08	0.13	0.17	0.22	0.27	0.32	0.37	0.43
13.11	14.28	15.16	**	**	3450	0.00	0.05	0.10	0.16	0.21	0.27	0.32	0.39	0.45	0.52
1.07	1.18	1.27	1.50	2.05	200	0.00	0.00	0.01	0.01	0.01	0.02	0.02	0.02	0.02	0.03
2.03	2.23	2.40	2.85	3.89	400	0.00	0.01	0.01	0.02	0.02	0.03	0.04	0.04	0.05	0.06
2.93	3.23	3.47	4.13	5.63	600	0.00	0.01	0.02	0.03	0.04	0.05	0.06	0.07	0.08	0.09
3.81	4.20	4.51	5.36	7.30	800	0.00	0.01	0.02	0.04	0.05	0.06	0.08	0.09	0.10	0.12
4.66	5.14	5.52	6.55	8.90	1000	0.00	0.01	0.03	0.05	0.06	0.08	0.09	0.11	0.13	0.15
5.48	6.04	6.49	7.69	10.43	1200	0.00	0.02	0.03	0.05	0.07	0.09	0.11	0.13	0.16	0.18
6.29	6.93	7.43	8.80	11.88	1400	0.00	0.02	0.04	0.06	0.08	0.11	0.13	0.16	0.18	0.21
7.06	7.78	8.35	9.87	13.25	1600	0.00	0.02	0.04	0.07	0.10	0.12	0.15	0.18	0.21	0.24
7.82	8.61	9.23	10.89	14.53	1800	0.00	0.03	0.05	0.08	0.11	0.14	0.17	0.20	0.23	0.27
8.55	9.41	10.08	11.87	15.72	2000	0.00	0.03	0.06	0.09	0.12	0.15	0.19	0.22	0.26	0.30
9.26	10.18	10.90	12.80	16.81	2200	0.00	0.03	0.06	0.10	0.13	0.17	0.21	0.25	0.28	0.33
9.95	10.92	11.68	13.68	**	2400	0.00	0.03	0.07	0.11	0.14	0.18	0.23	0.27	0.31	0.36
10.61	11.63	12.43	14.50	**	2600	0.00	0.04	0.07	0.12	0.16	0.20	0.24	0.29	0.34	0.39
11.24	12.31	13.14	15.27	**	2800	0.00	0.04	0.08	0.13	0.17	0.22	0.26	0.31	0.36	0.42
11.85	12.96	13.81	15.99	**	3000	0.00	0.04	0.08	0.14	0.18	0.23	0.28	0.34	0.39	0.45
12.43	13.57	14.44	**	**	3200	0.00	0.05	0.09	0.14	0.19	0.25	0.30	0.36	0.41	0.48
12.97	14.14	15.02	**	**	3400	0.00	0.05	0.09	0.15	0.20	0.26	0.32	0.38	0.44	0.51
13.49	14.67	**	**	**	3600	0.00	0.05	0.10	0.16	0.22	0.28	0.34	0.40	0.47	0.54
13.97	15.17	**	**	**	3800	0.00	0.06	0.11	0.17	0.23	0.29	0.36	0.43	0.49	0.57
14.42	**	**	**	**	4000	0.00	0.06	0.11	0.18	0.24	0.31	0.38	0.45	0.52	0.60
**	**	**	**	**	4200	0.00	0.06	0.12	0.19	0.25	0.32	0.39	0.47	0.54	0.63
**	**	**	**	**	4400	0.00	0.06	0.12	0.20	0.26	0.34	0.41	0.49	0.57	0.66
**	**	**	**	**	4600	0.00	0.07	0.13	0.21	0.28	0.35	0.43	0.51	0.60	0.69
**	**	**	**	**	4800	0.00	0.07	0.13	0.22	0.29	0.37	0.45	0.54	0.62	0.72
**	**	**	**	**	5000	0.00	0.07	0.14	0.23	0.30	0.39	0.47	0.56	0.65	0.75
**	**	**	**	**	5200	0.00	0.08	0.14	0.23	0.31	0.40	0.49	0.58	0.67	0.78
**	**	**	**	**	5400	0.00	0.08	0.15	0.24	0.32	0.42	0.51	0.60	0.70	0.81
**	**	**	**	**	5600	0.00	0.08	0.16	0.25	0.34	0.43	0.53	0.63	0.72	0.84
**	**	**	**	**	5800	0.00	0.08	0.16	0.26	0.35	0.45	0.55	0.65	0.75	0.87
**	**	**	**	**	6000	0.00	0.09	0.17	0.27	0.36	0.46	0.56	0.67	0.78	0.90
**	**	**	**	**	6200	0.00	0.09	0.17	0.28	0.37	0.48	0.58	0.69	0.80	0.93
**	**	**	**	**	6400	0.00	0.09	0.18	0.29	0.39	0.49	0.60	0.72	0.83	0.96
**	**	**	**	**	6600	0.00	0.10	0.18	0.30	0.40	0.51	0.62	0.74	0.85	0.99

⚠**WARNING** ** = Sheave rim speeds in excess of 6,000 feet per minute - see page 236

POWER-WEDGE BASIC HORSEPOWER RATINGS TABLES

5VX Power-Wedge Cog-Belt

RPM OF FASTER SHAFT	RATED HORSEPOWER PER BELT FOR SMALL SHEAVE OUTSIDE DIAMETER																
	4.40 *	4.65 *	4.90 *	5.20 *	5.50 *	5.90 *	6.30 *	6.70 *	7.10	7.50	8.00	8.50	9.00	9.25	9.75	10.30	10.90
435	1.55	1.88	2.20	2.58	2.97	3.48	3.98	4.48	4.99	5.48	6.10	6.72	7.33	7.64	8.25	8.91	9.64
485	1.69	2.04	2.40	2.83	3.25	3.81	4.37	4.93	5.48	6.03	6.71	7.40	8.07	8.41	9.08	9.81	10.61
575	1.91	2.33	2.75	3.24	3.74	4.40	5.05	5.70	6.35	6.99	7.79	8.58	9.37	9.76	10.55	11.40	12.33
690	2.18	2.67	3.17	3.76	4.34	5.12	5.89	6.66	7.42	8.18	9.12	10.05	10.98	11.44	12.36	13.36	14.44
725	2.26	2.78	3.29	3.91	4.52	5.33	6.14	6.94	7.74	8.53	9.51	10.49	11.45	11.94	12.89	13.94	15.07
870	2.56	3.17	3.78	4.51	5.23	6.19	7.14	8.08	9.02	9.95	11.10	12.24	13.38	13.94	15.06	16.28	17.59
950	2.72	3.38	4.04	4.83	5.61	6.64	7.67	8.69	9.70	10.71	11.95	13.18	14.40	15.00	16.21	17.51	18.92
1160	3.09	3.89	4.68	5.62	6.55	7.78	9.00	10.22	11.41	12.60	14.07	15.52	16.95	17.66	19.07	20.59	22.22
1425	3.50	4.45	5.40	6.52	7.63	9.10	10.56	11.99	13.41	14.81	16.54	18.23	19.89	20.72	22.33	24.08	25.93
1750	3.90	5.04	6.16	7.50	8.82	10.55	12.26	13.94	15.60	17.22	19.21	21.15	23.04	23.96	25.77	27.70	29.73
2850	4.47	6.13	7.75	9.65	11.51	13.90	16.21	18.42	20.53	22.53	24.89	27.06	**	**	**	**	**
3450	4.23	60.09	7.89	9.99	12.00	14.56	16.97	19.22	21.29	**	**	**	**	**	**	**	**
200	0.85	1.01	1.16	1.35	1.54	1.78	2.03	2.27	2.52	2.76	3.06	3.36	3.66	3.81	4.11	4.44	4.79
400	1.46	1.76	2.06	2.41	2.77	3.24	3.71	4.17	4.63	5.10	5.67	6.24	6.81	7.09	7.66	8.27	8.94
600	1.97	2.41	2.84	3.36	3.87	4.56	5.24	5.91	6.58	7.25	8.08	8.91	9.73	10.13	10.95	11.83	12.79
800	2.42	2.99	3.55	4.22	4.89	5.78	6.66	7.54	8.41	9.27	10.34	11.41	12.46	12.98	14.03	15.16	16.39
1000	2.81	3.51	4.20	5.02	5.84	6.92	8.00	9.06	10.12	11.17	12.47	13.75	15.03	15.66	16.91	18.27	19.73
1200	3.16	3.98	4.79	5.76	6.72	7.99	9.25	10.49	11.73	12.95	14.46	15.95	17.42	18.15	19.58	21.14	22.81
1400	3.46	4.40	5.33	6.44	7.54	8.99	10.42	11.83	13.23	14.61	16.31	17.99	19.63	20.44	22.04	23.77	25.61
1600	3.73	4.78	5.82	7.06	8.29	9.91	11.50	13.08	14.63	16.15	18.02	19.86	21.65	22.54	24.27	26.12	28.09
1800	3.95	5.12	6.27	7.63	8.98	10.76	12.50	14.22	15.91	17.56	19.58	21.56	23.47	24.41	26.24	28.19	30.23
2000	4.14	5.41	6.66	8.14	9.61	11.53	13.42	15.26	17.07	18.84	20.98	23.06	25.07	26.05	27.94	29.94	32.00
2200	4.28	5.65	7.00	8.60	10.17	12.23	14.24	16.20	18.11	19.97	22.21	24.37	26.44	27.43	29.35	31.35	33.38
2400	4.39	5.85	7.29	8.99	10.66	12.84	14.96	17.02	19.01	20.94	23.26	25.46	27.55	28.55	30.45	32.39	**
2600	4.45	6.00	7.53	9.33	11.08	13.37	15.58	17.72	19.78	21.76	24.11	26.33	28.39	29.37	**	**	**
2800	4.47	6.11	7.71	9.59	11.43	13.81	16.10	18.30	20.40	22.40	24.76	26.95	**	**	**	**	**
3000	4.45	6.16	7.83	9.79	11.70	14.15	16.50	18.74	20.86	22.86	25.19	**	**	**	**	**	**
3200	4.38	6.16	7.90	9.93	11.89	14.40	16.79	19.04	21.16	23.13	**	**	**	**	**	**	**
3400	4.27	6.11	7.90	9.98	11.99	14.54	16.95	19.20	21.29	**	**	**	**	**	**	**	**
3600	4.11	6.00	7.84	9.97	12.00	14.58	16.98	19.20	**	**	**	**	**	**	**	**	**
3800	3.89	5.83	7.71	9.87	11.93	14.50	16.88	**	**	**	**	**	**	**	**	**	**
4000	3.63	5.61	7.51	9.69	11.75	14.31	**	**	**	**	**	**	**	**	**	**	**
4200	3.31	5.32	7.24	9.43	11.48	14.00	**	**	**	**	**	**	**	**	**	**	**
4400	2.94	4.96	6.89	9.08	11.10	**	**	**	**	**	**	**	**	**	**	**	**
4600	2.50	4.54	6.47	8.63	**	**	**	**	**	**	**	**	**	**	**	**	**
4800	2.01	4.05	5.97	**	**	**	**	**	**	**	**	**	**	**	**	**	**
5000	1.46	3.49	5.38	**	**	**	**	**	**	**	**	**	**	**	**	**	**
5200	0.85	2.86	**	**	**	**	**	**	**	**	**	**	**	**	**	**	**
5400	0.17	**	**	**	**	**	**	**	**	**	**	**	**	**	**	**	**
5600	-0.58	**	**	**	**	**	**	**	**	**	**	**	**	**	**	**	**
5800	**	**	**	**	**	**	**	**	**	**	**	**	**	**	**	**	**
6000	**	**	**	**	**	**	**	**	**	**	**	**	**	**	**	**	**

⚠**WARNING** * = Diameters below RMA minimum for other than Cog Belt V-belts. ** = Sheave Rim Speed over 6,500 feet per minute - Consult Carlisle.

POWER-WEDGE BASIC HORSEPOWER RATINGS TABLES

5VX Power-Wedge Cog-Belt

							RPM OF FASTER SHAFT	Additional Horsepower per Belt for Speed Ratio									
11.30	11.80	12.50	13.20	14.00	15.00	16.00		1.00 to 1.01	1.02 to 1.03	1.04 to 1.06	1.07 to 1.09	1.10 to 1.13	1.14 to 1.18	1.19 to 1.25	1.26 to 1.35	1.36 to 1.57	1.58 and over
10.12	10.71	11.54	12.37	13.31	14.47	15.62	435	0.00	0.04	0.08	0.13	0.17	0.22	0.27	0.32	0.37	0.43
11.14	11.80	12.71	13.62	14.65	15.93	17.19	485	0.00	0.05	0.09	0.14	0.19	0.25	0.30	0.36	0.42	0.48
12.94	13.70	14.76	15.82	17.01	18.48	19.94	575	0.00	0.06	0.11	0.17	0.23	0.29	0.36	0.43	0.49	0.57
15.16	16.05	17.29	18.51	19.90	21.61	23.29	690	0.00	0.07	0.13	0.21	0.27	0.35	0.43	0.51	0.59	0.69
15.82	16.75	18.04	19.31	20.75	22.52	24.27	725	0.00	0.07	0.13	0.22	0.29	0.37	0.45	0.54	0.62	0.72
18.46	19.53	21.02	22.49	24.14	26.16	28.14	870	0.00	0.08	0.16	0.26	0.35	0.44	0.54	0.64	0.75	0.86
19.85	21.00	22.59	24.15	25.90	28.05	30.13	950	0.00	0.09	0.17	0.28	0.38	0.48	0.59	0.70	0.81	0.94
23.29	24.61	26.43	28.20	30.17	32.55	34.83	1160	0.00	0.11	0.21	0.35	0.46	0.59	0.72	0.86	0.99	1.15
27.14	28.62	30.64	32.58	34.70	37.20	39.54	1425	0.00	0.14	0.26	0.43	0.57	0.73	0.89	1.06	1.22	1.42
31.03	32.60	34.70	36.67	38.75	**	**	1750	0.00	0.17	0.32	0.52	0.70	0.89	1.09	1.30	1.50	1.74
**	**	**	**	**	**	**	2850	0.00	0.27	0.52	0.85	1.14	1.45	1.77	2.11	2.44	2.83
**	**	**	**	**	**	**	3450	0.00	0.33	0.63	1.03	1.37	1.76	2.15	2.56	2.96	3.43
5.03	5.32	5.73	6.14	6.60	7.18	7.75	200	0.00	0.02	0.04	0.06	0.08	0.10	0.12	0.15	0.17	0.20
9.39	9.94	10.71	11.48	12.35	13.43	14.50	400	0.00	0.04	0.07	0.12	0.16	0.20	0.25	0.30	0.34	0.40
13.43	14.22	15.32	16.41	17.65	19.18	20.68	600	0.00	0.06	0.11	0.18	0.24	0.31	0.37	0.44	0.51	0.60
17.20	18.21	19.60	20.98	22.53	24.44	26.31	800	0.00	0.08	0.15	0.24	0.32	0.41	0.50	0.59	0.69	0.80
20.70	21.89	23.54	25.16	26.97	29.18	31.32	1000	0.00	0.10	0.18	0.30	0.40	0.51	0.62	0.74	0.86	0.99
23.91	25.26	27.11	28.91	30.92	33.33	35.63	12.00	0.00	0.12	0.22	0.36	0.48	0.61	0.75	0.89	1.03	1.19
26.80	28.27	30.27	32.20	34.31	36.82	39.16	1400	0.00	0.13	0.26	0.42	0.56	0.71	0.87	1.04	1.20	1.39
29.36	30.90	32.99	34.97	37.10	39.57	**	1600	0.00	0.15	0.29	0.48	0.64	0.82	1.00	1.18	1.37	1.59
31.54	33.11	35.21	37.16	**	**	**	1800	0.00	0.17	0.33	0.54	0.72	0.92	1.12	1.33	1.54	1.79
33.31	34.86	**	**	**	**	**	2000	0.00	0.19	0.37	0.60	0.80	1.02	1.24	1.48	1.71	1.99
**	**	**	**	**	**	**	2200	0.00	0.21	0.40	0.66	0.88	1.12	1.37	1.63	1.88	2.19
**	**	**	**	**	**	**	2400	0.00	0.23	0.44	0.72	0.96	1.22	1.49	1.78	2.06	2.39
**	**	**	**	**	**	**	2600	0.00	0.25	0.48	0.78	1.04	1.33	1.62	1.93	2.23	2.58
**	**	**	**	**	**	**	2800	0.00	0.27	0.51	0.84	1.12	1.43	1.74	2.07	2.40	2.78
**	**	**	**	**	**	**	3000	0.00	0.29	0.55	0.90	1.19	1.53	1.87	2.22	2.57	2.98
**	**	**	**	**	**	**	3200	0.00	0.31	0.59	0.96	1.27	1.63	1.99	2.37	2.74	3.18
**	**	**	**	**	**	**	3400	0.00	0.33	0.62	1.02	1.35	1.73	2.11	2.52	2.91	3.38
**	**	**	**	**	**	**	3600	0.00	0.35	0.66	1.08	1.43	1.84	2.24	2.67	3.08	3.58
**	**	**	**	**	**	**	3800	0.00	0.37	0.70	1.14	1.51	1.94	2.36	2.81	3.26	3.78
**	**	**	**	**	**	**	4000	0.00	0.39	0.73	1.20	1.59	2.04	2.49	2.96	3.43	3.98
**	**	**	**	**	**	**	4200	0.00	0.40	0.77	1.26	1.67	2.14	2.61	3.11	3.60	4.18
**	**	**	**	**	**	**	4400	0.00	0.42	0.81	1.32	1.75	2.24	2.74	3.26	3.77	4.37
**	**	**	**	**	**	**	4600	0.00	0.44	0.84	1.38	1.83	2.35	2.86	3.41	3.94	4.57
**	**	**	**	**	**	**	4800	0.00	0.46	0.88	1.43	1.91	2.45	2.99	3.55	4.11	4.77
**	**	**	**	**	**	**	5000	0.00	0.48	0.92	1.49	1.99	2.55	3.11	3.70	4.28	4.97
**	**	**	**	**	**	**	5200	0.00	0.50	0.95	1.55	2.07	2.65	3.23	3.85	4.46	5.17
**	**	**	**	**	**	**	5400	0.00	0.52	0.99	1.61	2.15	2.75	3.36	4.00	4.63	5.37
**	**	**	**	**	**	**	5600	0.00	0.54	1.03	1.67	2.23	2.86	3.48	4.15	4.80	5.57
**	**	**	**	**	**	**	5800	0.00	0.56	1.06	1.73	2.31	2.96	3.61	4.30	4.97	5.77
**	**	**	**	**	**	**	6000	0.00	0.58	1.10	1.79	2.39	3.06	3.73	4.44	5.14	5.96

⚠ **WARNING** * = Diameters below RMA minimum for other than Cog Belt V-belts. ** = Sheave Rim Speed over 6,500 feet per minute - Consult CARLISLE.

POWER-WEDGE BASIC HORSEPOWER RATINGS TABLES

5VX Power-Wedge Cog-Belt

RPM OF FASTER SHAFT	RATED HORSEPOWER PER BELT FOR SMALL SHEAVE OUTSIDE DIAMETER																
	4.40	4.65	4.90	5.20	5.50	5.90	6.30	6.70	7.10	7.50	8.00	8.50	9.00	9.25	9.75	10.30	10.90
435	2.57	2.90	3.22	3.61	3.99	4.51	5.01	5.52	6.03	6.53	7.16	7.78	8.40	8.71	9.32	10.00	10.73
485	2.82	3.18	3.54	3.97	4.40	4.96	5.53	6.09	6.65	7.20	7.90	8.58	9.27	9.61	10.29	11.04	11.85
575	3.27	3.69	4.11	4.61	5.11	5.77	6.43	7.09	7.74	8.40	9.21	10.01	10.81	11.21	12.01	12.88	13.82
690	3.82	4.32	4.81	5.41	6.00	6.78	7.57	8.34	9.12	9.88	10.84	11.79	12.74	13.21	14.15	15.17	16.28
725	3.98	4.50	5.02	5.65	6.27	7.09	7.90	8.72	9.53	10.33	11.33	12.33	13.31	13.81	14.79	15.86	17.02
870	4.64	5.26	5.88	6.61	7.35	8.32	9.28	10.24	11.20	12.15	13.33	14.50	15.66	16.24	17.39	18.65	20.01
950	5.00	5.67	6.34	7.13	7.93	8.98	10.03	11.07	12.10	13.13	14.40	15.67	16.92	17.55	18.79	20.15	21.61
1160	5.90	6.71	7.51	8.46	9.42	10.68	11.93	13.17	14.40	15.63	17.15	18.65	20.14	20.89	22.36	23.96	25.69
1425	6.98	7.95	8.92	10.07	11.21	12.73	14.23	15.71	17.19	18.65	20.45	22.24	24.04	24.88	26.61	28.49	30.51
1750	8.23	9.40	10.55	11.93	13.30	15.11	16.89	18.66	20.41	22.13	24.26	26.35	28.41	29.43	31.44	33.60	35.91
2850	11.86	13.62	15.35	17.40	19.42	22.06	24.64	27.15	29.60	31.97	34.85	37.61	**	**	**	**	**
3450	13.45	15.47	17.46	19.80	22.09	25.06	27.93	30.69	33.34	**	**	**	**	**	**	**	**
200	1.31	1.47	1.62	1.81	2.00	2.24	2.49	2.73	2.98	3.22	3.53	3.83	4.13	4.28	4.58	4.91	5.26
400	2.39	2.69	2.99	3.35	3.71	4.18	4.65	5.12	5.59	6.05	6.63	7.21	7.78	8.07	8.64	9.26	9.94
600	3.39	3.83	4.26	4.79	5.31	6.00	6.68	7.37	8.05	8.72	9.56	10.40	11.23	11.65	12.48	13.38	14.36
800	4.33	4.90	5.47	6.15	6.83	7.73	8.62	9.51	10.40	11.28	12.37	13.46	14.54	15.07	16.14	17.31	18.58
1000	5.22	5.92	6.62	7.46	8.29	9.39	10.49	11.57	12.66	13.73	15.07	16.39	17.70	18.36	19.66	21.07	22.60
1200	6.07	6.90	7.72	8.71	9.69	10.99	12.28	13.56	14.83	16.10	17.66	19.21	20.74	21.50	23.02	24.66	26.44
1400	6.88	7.84	8.79	9.92	11.05	12.54	14.01	15.48	16.93	18.37	20.15	21.91	23.65	24.51	26.22	28.08	30.07
1600	7.66	8.74	9.81	11.09	12.35	14.03	15.68	17.32	18.95	20.55	22.54	24.50	26.43	27.38	29.27	31.31	33.49
1800	8.42	9.61	10.80	12.21	13.61	15.46	17.29	19.10	20.88	22.65	24.82	26.96	29.06	30.09	32.14	34.34	36.69
2000	9.14	10.45	11.74	13.29	14.82	16.84	18.83	20.80	22.74	24.65	26.99	29.29	31.54	32.65	34.83	37.16	39.64
2200	9.83	11.25	12.66	14.33	15.99	18.17	20.31	22.42	24.50	26.55	29.05	31.49	33.87	35.04	37.33	39.76	42.32
2400	10.49	12.01	13.53	15.33	17.10	19.43	21.72	23.97	26.18	28.34	30.98	33.55	36.03	37.25	39.62	42.12	**
2600	11.12	12.75	14.36	16.28	18.16	20.64	23.06	25.44	27.76	30.03	32.79	35.45	38.02	39.27	**	**	**
2800	11.72	13.45	15.16	17.18	19.18	21.79	24.33	26.82	29.25	31.61	34.46	37.20	**	**	**	**	**
3000	12.28	14.11	15.91	18.04	20.14	22.87	25.53	28.12	30.63	33.06	35.99	**	**	**	**	**	**
3200	12.82	14.74	16.63	18.86	21.04	23.89	26.65	29.32	31.90	34.39	**	**	**	**	**	**	**
3400	13.33	15.33	17.30	19.62	21.89	24.83	27.68	30.42	33.06	**	**	**	**	**	**	**	**
3600	13.80	15.88	17.93	20.33	22.68	25.71	28.63	31.43	**	**	**	**	**	**	**	**	**
3800	14.23	16.40	18.51	20.99	23.41	26.52	29.49	**	**	**	**	**	**	**	**	**	**
4000	14.64	16.87	19.05	21.60	24.07	27.24	**	**	**	**	**	**	**	**	**	**	**
4200	15.00	17.30	19.54	22.15	24.67	27.89	**	**	**	**	**	**	**	**	**	**	**
4400	15.33	17.69	19.98	22.64	25.21	**	**	**	**	**	**	**	**	**	**	**	**
4600	15.62	18.03	20.37	23.08	**	**	**	**	**	**	**	**	**	**	**	**	**
4800	15.88	18.33	20.71	**	**	**	**	**	**	**	**	**	**	**	**	**	**
5000	16.09	18.59	20.99	**	**	**	**	**	**	**	**	**	**	**	**	**	**
5200	16.26	18.79	**	**	**	**	**	**	**	**	**	**	**	**	**	**	**
5400	16.39	**	**	**	**	**	**	**	**	**	**	**	**	**	**	**	**
5600	16.47	**	**	**	**	**	**	**	**	**	**	**	**	**	**	**	**

⚠ **WARNING** ** = Sheave Rim Speed over 6,000 feet per minute - see page 236

POWER-WEDGE BASIC HORSEPOWER RATINGS TABLES

5VX Power-Wedge Cog-Belt

							RPM OF FASTER SHAFT	Additional Horsepower per Belt for Speed Ratio									
11.30	11.80	12.50	13.20	14.00	15.00	16.00		1.00 to 1.01	1.02 to 1.03	1.04 to 1.06	1.07 to 1.09	1.10 to 1.13	1.14 to 1.18	1.19 to 1.25	1.26 to 1.35	1.36 to 1.35	1.58 and over
11.22	11.82	12.67	13.51	14.46	15.65	16.83	435	0.00	0.03	0.06	0.10	0.13	0.17	0.21	0.25	0.29	0.33
12.38	13.05	13.99	14.91	15.97	17.27	18.57	485	0.00	0.04	0.07	0.11	0.15	0.19	0.23	0.28	0.32	0.37
14.45	15.23	16.31	17.39	18.62	20.14	21.64	575	0.00	0.04	0.08	0.13	0.18	0.23	0.27	0.33	0.38	0.44
17.02	17.94	19.21	20.48	21.91	23.69	25.45	690	0.00	0.05	0.10	0.16	0.21	0.27	0.33	0.39	0.45	0.53
17.79	18.75	20.08	21.40	22.90	24.75	26.58	725	0.00	0.05	0.10	0.17	0.22	0.28	0.35	0.41	0.48	0.55
20.91	22.03	123.58	25.12	26.87	29.01	31.13	870	0.00	0.06	0.12	0.20	0.27	0.34	0.42	0.50	0.57	0.66
22.59	23.79	25.46	27.12	28.98	31.28	33.54	950	0.00	0.07	0.13	0.22	0.29	0.37	0.45	0.54	0.63	0.73
26.83	28.24	30.19	32.12	34.28	36.92	39.50	1160	0.00	0.09	0.16	0.27	0.36	0.45	0.55	0.66	0.76	0.89
31.84	33.48	35.73	37.93	40.39	43.36	46.22	1425	0.00	0.11	0.20	0.33	0.44	0.56	0.68	0.81	0.94	1.09
37.42	39.26	41.78	44.22	46.89	**	**	1750	0.00	0.13	0.25	0.40	0.54	0.69	0.84	1.00	1.15	1.34
**	**	**	**	**	**	**	2850	0.00	0.21	0.40	0.65	0.87	1.12	1.36	1.62	1.88	2.18
**	**	**	**	**	**	**	3450	0.00	0.26	0.49	0.79	1.06	1.35	1.65	1.96	2.27	2.64
5.50	5.80	6.21	6.62	7.09	7.67	8.25	200	0.00	0.01	0.03	0.05	0.06	0.08	0.10	0.00	0.13	0.05
10.39	10.95	11.73	12.51	13.40	14.50	15.59	400	0.00	0.03	0.06	0.09	0.12	0.16	0.19	0.23	0.26	0.31
15.01	15.82	16.95	18.07	19.34	20.92	22.48	600	0.00	0.04	0.08	0.14	0.18	0.24	0.29	0.34	0.40	0.46
19.42	20.46	21.91	23.34	24.97	26.98	28.96	800	0.00	0.06	0.11	0.18	0.24	0.31	0.38	0.46	0.53	0.61
23.62	24.87	26.61	28.34	30.28	32.66	35.01	1000	0.00	0.07	0.14	0.23	0.31	0.39	0.48	0.57	0.66	0.76
27.61	29.06	31.06	33.03	35.24	37.95	40.58	1200	0.00	0.09	0.17	0.28	0.37	0.47	0.57	0.68	0.79	0.92
31.38	33.00	35.23	37.41	39.84	42.79	45.63	1400	0.00	0.10	0.20	0.32	0.43	0.55	0.67	0.80	0.92	1.07
34.92	36.68	39.09	41.44	44.03	47.15	**	1600	0.00	0.12	0.23	0.37	0.49	0.63	0.76	0.91	1.05	1.22
38.22	40.09	42.64	45.09	**	**	**	1800	0.00	0.13	0.25	0.41	0.55	0.71	0.86	1.02	1.19	1.38
41.24	43.19	**	**	**	**	**	2000	0.00	0.15	0.28	0.46	0.61	0.78	0.96	1.14	1.32	1.53
**	**	**	**	**	**	**	2200	0.00	0.16	0.31	0.51	0.67	0.86	1.05	1.25	1.45	1.68
**	**	**	**	**	**	**	2400	0.00	0.18	0.34	0.55	0.73	0.94	1.15	1.37	1.58	1.83
**	**	**	**	**	**	**	2600	0.00	0.19	0.37	0.60	0.80	1.02	1.24	1.48	1.71	1.99
**	**	**	**	**	**	**	2800	0.00	0.21	0.39	0.64	0.86	1.10	1.34	1.59	1.84	2.14
**	**	**	**	**	**	**	3000	0.00	0.22	0.42	0.69	0.92	1.18	1.43	1.71	1.98	2.29
**	**	**	**	**	**	**	3200	0.00	0.24	0.45	0.74	0.98	1.25	1.53	1.82	2.11	2.44
**	**	**	**	**	**	**	3400	0.00	0.25	0.48	0.78	1.04	1.33	1.63	1.94	2.24	2.60
**	**	**	**	**	**	**	3600	0.00	0.27	0.51	0.83	1.10	1.41	1.72	2.05	2.37	2.75
**	**	**	**	**	**	**	3800	0.00	0.28	0.54	0.87	1.16	1.49	1.82	2.16	2.50	2.90
**	**	**	**	**	**	**	4000	0.00	0.30	0.56	0.92	1.22	1.57	1.91	2.28	2.63	3.06
**	**	**	**	**	**	**	4200	0.00	0.31	0.59	0.96	1.29	1.65	2.01	2.39	2.77	3.21
**	**	**	**	**	**	**	4400	0.00	0.33	0.62	1.01	1.35	1.72	2.10	2.50	2.90	3.36
**	**	**	**	**	**	**	4600	0.00	0.34	0.65	1.06	1.41	1.80	2.20	2.62	3.03	3.51
**	**	**	**	**	**	**	4800	0.00	0.36	0.68	1.10	1.47	1.88	2.29	2.73	3.16	3.67
**	**	**	**	**	**	**	5000	0.00	0.37	0.71	1.15	1.53	1.96	2.39	2.85	3.29	3.82
**	**	**	**	**	**	**	5200	0.00	0.39	0.73	1.19	1.59	2.04	2.49	2.96	3.42	3.97
**	**	**	**	**	**	**	5400	0.00	0.40	0.76	1.24	1.65	2.12	2.58	3.07	3.56	4.13
**	**	**	**	**	**	**	5600	0.00	0.41	0.79	1.29	1.71	2.19	2.68	3.19	3.69	4.28

⚠ **WARNING** ** = Sheave Rim Speed over 6,500 feet per minute - see page 236

POWER-WEDGE BASIC HORSEPOWER RATINGS TABLES

8V Super Power-Wedge & 8VX Power-Wedge Cog-Belt

RPM OF FASTER SHAFT	RATED HORSEPOWER PER BELT FOR SMALL SHEAVE OUTSIDE DIAMETER										
	12.50	13.20	14.00	15.00	16.00	17.00	18.00	19.00	20.00	21.20	22.40
435	2.011	22.28	24.75	27.82	30.86	33.87	36.86	39.82	42.75	46.23	49.88
485	22.02	24.42	27.14	30.51	33.84	37.15	40.42	43.65	46.86	50.66	54.41
575	25.34	28.11	31.26	35.15	39.00	42.79	46.54	50.25	53.90	58.22	62.46
690	29.32	32.56	36.22	40.72	45.16	49.53	53.82	58.04	62.19	67.05	71.80
725	30.48	33.85	37.65	42.34	46.94	51.47	55.91	60.27	64.54	69.55	74.42
870	35.00	38.88	43.24	48.58	53.81	58.90	63.87	68.70	73.39	78.82	84.04
950	37.29	41.42	46.05	51.71	57.22	62.57	67.76	72.77	77.60	83.16	88.43
1160	42.58	47.26	52.48	58.78	64.81	70.58	76.06	81.25	86.12	91.55	**
1425	47.60	52.74	58.36	65.00	71.19	76.89	**	**	**	**	**
1750	50.91	56.13	61.66	**	**	**	**	**	**	**	**
50	3.01	3.31	3.64	4.06	4.47	4.88	5.30	5.71	6.11	6.60	7.09
100	5.59	6.15	6.79	7.59	8.38	9.17	9.96	10.74	11.52	12.46	13.38
150	8.00	8.82	9.76	10.92	12.07	13.23	14.37	15.51	16.65	18.01	19.36
200	10.30	11.37	12.59	14.11	15.62	17.12	18.61	20.10	21.58	23.35	25.11
250	12.51	13.83	15.33	17.19	19.04	20.88	22.71	24.53	26.35	28.51	30.66
300	14.65	16.20	17.97	20.17	22.36	24.53	26.69	28.83	30.97	33.51	36.03
350	16.72	18.51	20.55	23.07	25.58	28.07	30.55	33.01	35.45	38.35	41.23
400	18.73	20.75	23.04	25.89	28.72	31.52	34.30	37.05	39.79	43.04	46.26
450	20.69	22.93	25.48	28.63	31.76	34.86	37.94	40.98	44.00	47.58	51.12
500	22.59	25.05	27.84	31.30	34.72	38.11	41.46	44.78	48.06	51.96	55.79
550	24.43	27.11	30.14	33.89	37.59	41.26	44.88	48.46	51.99	56.17	60.28
600	26.23	29.11	32.37	36.40	40.38	44.31	48.18	52.00	55.77	60.22	64.58
650	27.97	31.05	34.53	38.83	43.07	47.25	51.36	55.41	59.40	64.09	68.68
700	29.66	32.93	36.63	41.19	45.68	50.09	54.43	58.69	62.87	67.77	72.56
750	31.29	34.75	38.66	43.46	48.19	52.82	57.36	61.81	66.17	71.27	76.22
800	32.88	36.51	40.62	45.66	50.60	55.44	60.17	64.79	69.30	74.56	79.65
850	34.40	38.21	42.50	47.76	52.91	57.94	62.84	67.61	72.26	77.65	82.83
900	35.87	39.85	44.32	49.78	55.12	60.32	65.37	70.27	75.03	80.51	85.76
950	37.29	41.42	46.05	51.71	57.22	62.57	67.76	72.77	77.60	83.16	88.43
1000	38.65	42.92	47.71	53.55	59.22	64.70	69.99	75.08	79.97	85.56	90.82
1050	39.94	44.36	49.29	55.29	61.10	66.69	72.07	77.22	82.14	87.72	92.93
1100	41.18	45.72	50.79	56.94	62.86	68.54	73.98	79.17	84.09	89.62	94.73
1150	42.35	47.01	52.21	58.48	64.50	70.25	75.73	80.92	85.81	91.25	**
1200	43.46	48.23	53.53	59.92	66.02	71.82	77.31	82.47	87.30	**	**
1250	44.50	49.37	54.77	61.25	67.40	73.23	78.70	83.81	**	**	**
1300	45.47	50.44	55.92	62.46	68.66	74.48	79.91	84.94	**	**	**
1350	46.38	51.42	56.97	63.57	69.78	75.57	80.93	**	**	**	**
1400	47.21	52.32	57.92	64.55	70.75	76.49	**	**	**	**	**
1450	47.98	53.14	58.78	65.42	71.58	77.24	**	**	**	**	**
1500	48.66	53.87	59.53	66.16	72.27	**	**	**	**	**	**
1550	49.27	54.51	60.18	66.77	72.79	**	**	**	**	**	**
1600	49.80	55.06	60.72	67.26	**	**	**	**	**	**	**
1650	50.26	55.51	61.15	67.60	**	**	**	**	**	**	**
1700	50.62	55.87	61.46	**	**	**	**	**	**	**	**
1750	50.91	56.13	61.66	**	**	**	**	**	**	**	**
1800	51.11	56.29	**	**	**	**	**	**	**	**	**
1850	51.22	56.35	**	**	**	**	**	**	**	**	**
1900	51.24	**	**	**	**	**	**	**	**	**	**
1950	51.17	**	**	**	**	**	**	**	**	**	**
2000	**	**	**	**	**	**	**	**	**	**	**

RPM OF FASTER SHAFT	Additional Horsepower per Belt for Speed Ratio									
	1.00 to 1.01	1.02 to 1.03	1.04 to 1.06	1.07 to 1.09	1.10 to 1.13	1.14 to 1.18	1.19 to 1.25	1.26 to 1.35	1.36 to 1.57	1.58 and over
435	0.00	0.20	.39	0.63	0.84	1.08	1.32	1.57	1.82	2.11
485	0.00	0.23	0.43	0.71	0.94	1.20	1.47	1.75	2.02	2.35
575	0.00	0.27	0.51	0.84	1.12	1.43	1.74	2.07	2.40	2.78
690	0.00	0.32	0.62	1.00	1.34	1.71	2.09	2.49	2.88	3.34
725	0.00	0.34	0.65	1.06	1.41	1.80	2.20	2.62	3.03	3.51
870	0.00	0.41	0.78	1.27	1.69	2.16	2.64	3.14	3.63	4.21
950	0.00	0.45	0.85	1.38	1.84	2.36	2.88	3.43	3.97	4.60
1160	0.00	0.54	1.04	1.69	2.25	2.88	3.52	4.19	4.84	5.62
1425	0.00	0.67	1.27	2.08	2.77	3.54	4.32	5.14	5.95	6.90
1750	0.00	0.82	1.56	2.55	3.40	4.35	5.30	6.31	7.30	8.48
50	0.00	0.02	0.04	0.7	0.10	0.12	0.15	0.18	0.21	0.24
100	0.00	0.05	0.09	0.15	0.19	0.25	0.30	0.36	0.42	0.48
150	0.00	0.07	0.13	0.22	0.29	0.37	0.45	0.54	0.63	0.73
200	0.00	0.09	0.18	0.29	0.39	0.50	0.61	0.72	0.83	0.97
250	0.00	0.12	0.22	0.36	0.49	0.62	0.76	0.90	1.04	1.21
300	0.00	0.14	0.27	0.44	0.58	0.75	0.91	1.08	1.25	1.45
350	0.00	0.16	0.31	0.51	0.68	0.87	1.06	1.26	1.46	1.70
400	0.00	0.19	0.36	0.58	0.78	0.99	1.21	1.44	1.67	1.94
450	0.00	0.21	0.40	.066	0.87	1.12	1.36	1.62	1.88	2.18
500	0.00	0.23	0.45	0.73	0.97	1.24	1.52	1.80	2.09	2.42
550	0.00	0.26	0.49	0.80	1.07	1.37	1.67	1.98	2.30	2.66
600	0.00	0.28	0.54	0.87	1.16	1.49	1.82	2.16	2.50	2.91
650	0.00	0.31	0.58	0.95	1.26	1.61	1.97	2.35	2.71	3.15
700	0.00	0.33	0.63	1.02	1.36	1.74	2.12	2.53	2.92	3.39
750	0.00	0.35	0.67	1.09	1.46	1.86	2.27	2.71	3.13	3.63
800	0.00	0.38	0.72	1.17	1.55	1.99	2.42	2.89	3.34	3.87
850	0.00	0.40	.076	1.24	1.65	2.11	2.58	3.07	3.55	4.12
900	0.00	0.42	0.80	1.31	1.75	2.24	2.73	3.32	3.76	4.36
950	0.00	0.45	0.85	1.38	1.84	2.36	2.88	3.43	3.97	4.60
1000	0.00	0.47	0.89	1.46	1.94	2.48	3.03	3.61	4.17	4.84
1050	0.00	0.49	0.94	1.53	2.04	2.61	3.18	3.79	4.38	5.09
1100	0.00	0.52	0.98	1.60	2.13	2.73	3.33	3.97	4.59	5.33
1150	0.00	0.54	1.03	1.67	2.23	2.86	3.48	4.15	4.80	5.57
1200	0.00	0.56	1.07	1.75	2.33	2.98	3.64	4.33	5.01	5.81
1250	0.00	0.59	1.12	1.82	2.43	3.11	3.79	4.51	5.22	6.05
1300	0.00	0.61	1.16	1.89	2.52	3.23	3.94	4.69	5.43	6.30
1350	0.00	0.63	1.21	1.97	2.62	3.35	4.09	4.87	5.64	6.54
1400	0.00	0.66	1.25	2.04	2.72	3.48	4.24	5.05	5.84	6.78
1450	0.00	0.68	1.30	2.11	2.81	3.60	4.39	5.23	6.05	7.02
1500	0.00	0.70	1.34	2.18	2.91	3.73	4.55	5.41	6.26	7.26
1550	0.00	0.73	1.39	2.26	3.01	3.85	4.70	5.59	6.47	7.51
1600	0.00	0.75	1.43	2.33	3.10	3.97	4.85	5.77	6.68	7.75
1650	0.00	0.77	1.48	2.40	3.20	4.10	5.00	5.95	6.89	7.99
1700	0.00	0.08	1.52	2.48	3.30	4.22	5.15	6.13	7.10	8.23
1750	0.00	0.82	1.56	2.55	3.40	4.35	5.30	6.31	7.30	8.48
1800	0.00	0.84	1.61	2.62	3.49	4.47	5.45	6.49	7.51	8.72
1850	0.00	0.87	1.65	2.69	3.59	4.60	5.61	6.67	7.72	8.96
1900	0.00	0.89	1.70	2.77	3.69	4.72	5.76	6.86	7.93	9.20
1950	0.00	0.92	1.74	2.84	3.78	4.84	5.91	7.04	8.14	9.44
2000	0.00	0.94	1.79	2.91	3.88	4.97	6.06	7.22	8.35	9.69

⚠ **WARNING** ** = Sheave Rim Speed over 6,500 feet per minute - Consult Carlisle.

INSTALLATION AND TAKE-UP DATA

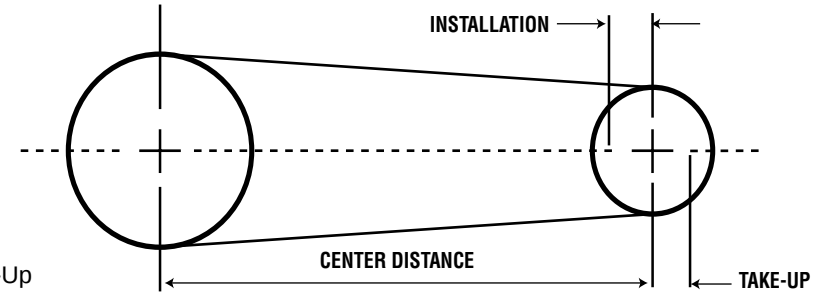

Figure 3
Installation and Take-Up

TABLE 3 POWER-WEDGE/SUPER POWER-WEDGE V-BELTS CENTER DISTANCE ALLOWANCE FOR INSTALLATION AND TAKE-UP (INCHES)

Standard Length Designation	For Installation (Subtract)						For Take-Up (Add)
	3VX 3V	3V Banded	5VX 5V	5V Banded	8VX 8V	8V Banded	All Cross Sections
250 thru 475	0.5	1.2	—	—	—	—	1.0
500 thru 710	0.8	1.4	1.0	2.1	—	—	1.2
750 thru 1060	0.8	1.4	1.0	2.1	1.5	3.4	1.5
1120 thru 1250	0.8	1.4	1.0	2.1	1.5	3.4	1.8
1320 thru 1700	0.8	1.4	1.0	2.	1.5	3.4	2.2
1800 thru 2000	—	—	1.0	2.1	1.8	3.6	2.5
2120 thru 2360	—	—	1.2	2.4	1.8	3.6	3.0
2500 thru 2650	—	—	1.2	2.4	1.8	3.6	3.2
2800 thru 3000	—	—	1.2	2.4	1.8	3.6	3.5
3150 thru 3550	—	—	1.2	2.4	2.0	4.0	4.0
3750	—	—	—	—	2.0	4.0	4.5
4000 thru 5000	—	—	—	—	2.0	4.0	5.5

TABLE 4 CLASSICAL V-BELTS CENTER DISTANCE ALLOWANCE FOR INSTALLATION AND TAKE-UP (INCHES)

Standard Length Designation	For Installation (Subtract)							For Take-Up (Add)
	A, AX AK, AP	B, BX BK, BP	BX & BP Banded	C, CX CK, CP	CX & CP Banded	DX DP	DX & DP Banded	All Cross Sections
21 thru 35	0.75	1.00	1.50	—	—	—	—	1.00
36 thru 55	0.75	1.00	1.50	1.50	2.00	—	—	1.50
56 thru 85	0.75	1.25	1.60	1.50	2.00	—	—	2.00
86 thru 112	1.00	1.25	1.60	1.50	2.00	—	—	2.50
116 thru 144	1.00	1.25	180	1.50	12.10	2.00	2.90	3.00
148 thru 180	—	1.25	1.80	2.00	2.20	2.00	3.00	3.50
191 thru 210	—	1.50	1.90	2.00	2.30	2.00	3.20	4.00
225 thru 240	—	1.50	2.00	2.00	2.50	2.50	3.20	4.50
225 thru 300	—	1.50	2.20	2.00	2.50	2.50	3.50	5.00
315 thru 390	—	—	—	2.00	2.70	2.50	3.60	6.00
420 and over	—	—	—	2.50	2.90	3.00	4.10	1.5% of Belt

SAFETY NOTE ⚠ WARNING

FAILURE TO FOLLOW RECOMMENDED APPLICATION INFORMATION AND RECOMMENDED PROCEDURES FOR INSTALLATION, CARE, MAINTENANCE AND STORAGE OF PRODUCTS MAY RESULT IN FAILURE TO PERFORM PROPERLY AND MAY RESULT IN DAMAGE TO PROPERTY AND SERIOUS BODILY INJURY. MAKE SURE THAT PRODUCT SELECTED FOR ANY APPLICATION IS RECOMMENDED FOR THAT SERVICE.

APPLICATION INFORMATION IS GIVEN WITH THE PRODUCTS LISTED IN THIS CATALOG. REFER TO THE SAFETY AND TECHNICAL DATA SECTIONS OF THIS CATALOG FOR INFORMATION REGARDING SAFETY,CARE, MAINTENANCE AND STORAGE OR CONTACT CARLISLE OR YOUR CARLISLE DISTRIBUTOR FOR ASSISTANCE OR SPECIFIC RECOMMENDATIONS.

CARLISLE LIMITED WARRANTY

Products manufactured by Carlisle are warranted to be free from defects in material and workmanship under normal operating conditions of recommended usage for a period of 12 months after shipment. Carlisle's liability under this warranty is limited to the purchase price or, at its option, the repair or replacement of any product which is determined by Carlisle to its satisfaction to be defective upon return to Carlisle, transportation charges prepaid, with Carlisle's prior written authorization. This warranty does not apply to any product which has been improperly installed, maintained, or has been subjected to improper operation or use.

EXCEPT AS EXPRESSLY STATED ABOVE, CARLISLE MAKES NO WARRANTY, EXPRESS OR IMPLIED, WHETHER OF MERCHANTABILITY OF FITNESS FOR ANY PARTICULAR PURPOSE OR USE OR OTHERWISE OF THE PRODUCTS, OR ON ANY PARTS OR LABOR FURNISHED DURING THE SALE, DELIVERY OR SERVICING OF THE PRODUCTS. IN NO EVENT SHALL CARLISLE BE LIABLE TO BUYER FOR ANY SPECIAL, INDIRECT, INCIDENTAL OR CONSEQUENTIAL DAMAGES ARISING OUT OF, OR AS THE RESULT OF, THE SALE, DELIVERY, SERVICING, USE OR LOSS OF USE OF THE PRODUCTS OR ANY PART THEREOF, OR FOR ANY CHARGES OR EXPENSES OF ANY NATURE INCURRED WITHOUT CARLISLE'S WRITTEN CONSENT. IN NO EVENT SHALL CARLISLE'S LIABILITY UNDER ANY CLAIM MADE BY BUYER EXCEED THE PURCHASE PRICE OF THE PRODUCTS IN RESPECT OF WHICH DAMAGES ARE CLAIMED, EVEN IF CARLISLE HAS BEEN PROVIDED WITH NOTICE OF POTENTIAL LOSS.

Vee-RIB

DRIVE SELECTION PROCEDURE

Vee-Rib DRIVE DESIGN

Using Pre-Engineered Tables

The instructions below will assist you in the selection of the best drive for your machine, using sheave and belt combinations listed in the pre-engineered tables.

Before selecting the drive, you need to know only four facts:

1. Horsepower requirement of the drive.
2. The rpm of the driveR machine.
3. The rpm of the driveN machine.
4. The approximate center distance for the drive.

Step 1. Find the Service Factor

Select the proper Service Factor from the table on page 168, according to the type of driveR and driveN machines.

Step 2. Determine the Design Horsepower

The Design Horsepower is the result of multiplying the horsepower of driveR times the Service Factor.

Step 3. Select the Belt Cross-Section

3a The belt cross-section is selected from Table 5, page 168. Locate the Design Horsepower in the first column of this table, then under the proper motor speed column note the belt cross-section to be chosen for the drive.

3b If the intersection point is located on a shaded area, with two overlapping cross-sections, select the drive using each belt section and choose the most economical drive.

3c If driveR is an electric motor, check horsepower and rpm against the diameter range in Table 7, to make sure the motor sheave will conform to NEMA standards for minimum sheave diameter. If it would not, choose a larger cross-section or turn to non-Pre-Engineered Drive Design section on page 195.

Step 4. Determine Speed Ratio

This ratio is calculated by dividing the rpm of the faster sheave by the rpm of the slower sheave. Or if these are specified, divide the pitch diameter of the larger sheave by the pitch diameter of the smaller sheave.

Step 5. Drive Selection

Turn to Pre-Engineered tables for the belt cross-section chosen in Step 3 and find the closest speed ratio to the one determined in Step 4. Then, note the following data:

5a DriveR Diameter
5b DriveN Diameter
5c Closest Center Distance
5d Arc-Length Correction Factor
5e Belt Size
5f Rated Horsepower Per Rib

Step 6. Corrected Horsepower Per Rib

This is determined by multiplying the rated horsepower per rib times the Arc-Length Correction Factor.

Step 7. Required Number of Ribs

To calculate the required number of ribs divide the design horsepower by the corrected horsepower per rib. If this is a fractional number, select the next larger stock ribs.

Step 8. Installation and Take-Up Allowances

To complete the drive design, it is necessary to provide the installation and take-up allowances for the given belt cross-section and nominal belt length, as specified in Table 8, page 169. To install a new drive, the driveR or driveN machine should be dismounted in a movable base, in order to vary the center distance of the drive as per Table 8.

Vee-Rib DRIVE DESIGN EXAMPLE

Data: Design a Vee-Rib Belt drive for a 15 HP, 1750 RPM, high torque A.C. motor driving a fan at 1200 RPM. The desired center distance is 30 inches and the service is 16 hours per day. Due to space, the driveN sheave diameter must be less than 8 inches.

Step 1. Find the Service Factor

Table 4, page168, gives the service factor for the above conditions as1.4.

Step 2. Determine the Design Horsepower

Design HP = DriveR x Service Factor
Design HP = 15 x 1.4 = 21 HP

Step 3. Select the Belt Cross-Section

From Table 5, page 168, the cross-section for a design HP of 21 at 1750 RPM is an L-section.

Step 4. Determine the Speed Ratio

$$\text{Speed Ratio} = \frac{\text{RPM of faster sheave}}{\text{RPM of slower sheave}}$$

$$\text{Speed Ratio} = \frac{1750}{1200} = 1.46$$

Step 5. Drive Selection

Refer to the portion of page 180 of the drive design table that is reproduced below.

5a DriveR Diameter = 4.8
5b DriveN Diameter = 7.0
5c Closest center distance = 29.7"
5d Arc length correction factor = 1.00
5e Belt size = 78.0 effective length L-section
5f Rated Hp per rib = 2.90

Step 6. Corrected HP Per Rib

Corrected HP/Rib = Rated HP/Rib x arc length corrected factor
Corrected HP/Rib = 2.90 x 1.00 = 2.90

Step 7. Required Number of Ribs

$$\text{Number of Ribs} = \frac{\text{Design HP}}{\text{Corrected HP per Rib}}$$

$$\text{Number of Ribs} = \frac{21}{2.90} = 7.24 \text{ ribs}$$

Referring to page 219, a belt with 8 ribs and a 1-½" width, should be used.

Step 8. Installation and Take-Up Allowances

To provide for installation and take-up, the center distance must be adjustable from (29.7 - .9) to (29.7 + .9) or 28.6 to 30.6.

Vee-Rib DRIVE DESIGN DATA

Service Factors

NOTES	DRIVER TYPES	
1. Intermittent Service refers to 3-5 hours of daily or seasonal operation 2. Normal Service indicates 8-10 hours of daily operation. 3. Continuous Service refers to 16-24 hours of daily operation. 4. Duty classifications noted below are representative samples only. Choose your duty category most closely approximating conditions of your drive. 5. For Speed-up Drives use continuous service factor values.	**Electric Motors:** AC Normal Torque Squirrel Cage & Synchronous AC Split Phase DC Shunt wound Internal Combustion Engines	**Electric Motors:** AC Hi-Torque AC Hi-Slip AC Repulsion-Induction AC Single Phase Series Wound AC Slip Ring DC Compound Wound

Duty Category	Driven Machine Types	Intermittent Service	Normal Service	Continuous Service	Intermittent Service	Normal Service	Continuous Service
LIGHT	Agitators for Liquids Blowers-Exhausters Centrifugal Compressors Fans up to 10 HP Oven & Light Package Conveyors	1.0	1.1	1.2	1.1	1.2	1.3
NORMAL	Belt (Ore & Sand) Conveyors Dough Mixers Fans over 10 HP Geneartors and Exciters Line Shaft & Laundry Machinery Machine Tools Punches, Presses, Shears Printing Machinery Rotary and Centrifugal Pumps Revolving and Vibrating Screens	1.1	1.2	1.3	1.2	1.3	1.4
MEDIUM	Brick Machinery—Bucket Elevators Compressors (Rotary-Reciprocating) Conveyors (Drag, Pan, Screw) Hammer Mill Paper Mill Beaters Plunger Pumps Positive Blowers—Pulverizers Saw Mill & Woodworking Machinery Textile Machinery	1.2	1.3	1.4	1.4	1.5	1.6
SEVERE	Crushers (Giratory, Jaw, Roll) Mills (Ball, Rod, Tube) Hoists Rubber Calendars—Extruders—Mills	1.3	1.4	1.5	1.5	1.6	1.8

For chokeable equipment use a 2.0 service factor.

Table 5. Vee-Rib CROSS SECTION SELECTION CHART

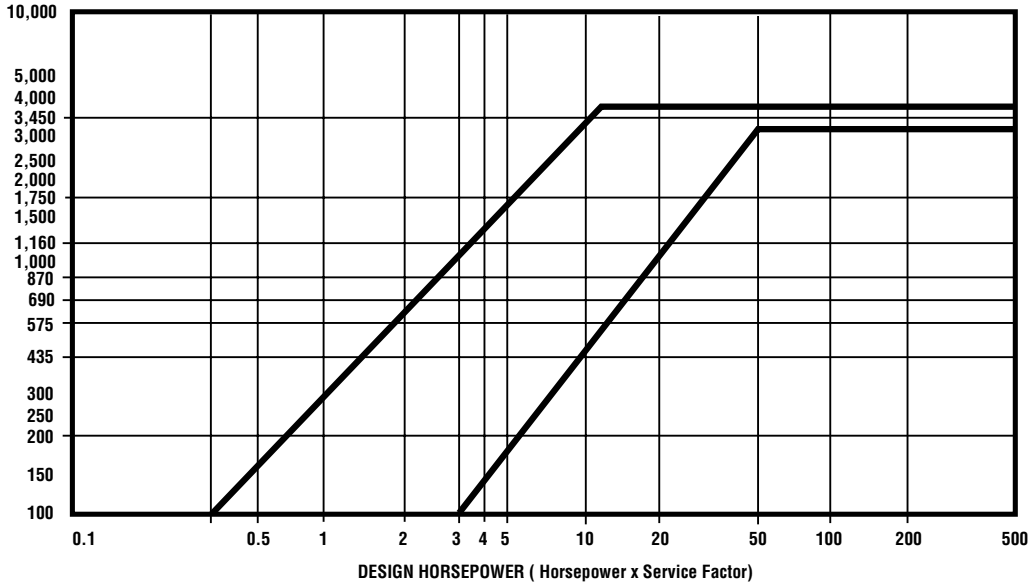

Vee-Rib DRIVE DESIGN DATA

Table 6
Minimum Sheave Pitch Diameters

V-Ribbed Cross-Section	Minimum Recommended Sheave Dia.	Min. Recommended Reverse Bend Idler Dia.
J	.80	2
L	3.0	6
M	7.0	12

Table 6 shows the Carlisle minimum recommended sheave diameters in order not to overload the bearings and shorten the life of the belt. If a drive design results in a drive with the small sheave larger than recommended for a given belt cross-section but smaller than the recommended minimum in Table 7 for a given electric motor, the drive must be re-designed with larger sheaves or oversize or outboard bearings must be used.

Table 7

Minimum Recommended Small Sheave Diameters for Electric Motors						
Motor Nameplate Horsepower	Standard Motor RPM					
	3450	**1750**	**1160**	**870**	**675**	**575**
⅛ or less	1¼	1¼	1½			
¼	1¼	1¼	1½			
⅓	1½	1½	2			
½	2	2	2½			
¾	2¼	2¼	2½	3	3	3
1	2¼	2¼	2½	3	3	3
1½	2¼	2½	2½	3	3	3
2	2½	2½	2½	3	3	3¾
3	2½	2½	3	3	3¾	4½
5	2½	3	3	3¾	4½	4½
7½	3	3	3¾	4½	4½	5¼
10	3	3¾	4½	4½	5¼	6
15	3¾	4½	4½	5¼	6	6¾
20	4½	4½	5¼	6	6¾	8¼
25	4½	4½	6	6¾	8¼	9
30		5¼	6¾	6¾	9	10
40		6	6¾	8¼	10	10
50		7	8⅜	9	10	11
60		7⅝	9	10	11	12
75		9	10	10	13	14
100		10	13	13	15	18
125		11	13	15	18	20
150			13	18	20	22
200				22	22	22
250					22	22
300					27	27

Table 8
Installation and Take-Up Allowances

Recommended Installation Center to Center Take-Up and Slack-Off Allowances							
	Take-Up Allowance Allow the following take-up sheave movement for manufacturer's belt-length tolerance on the long side plus service stretch	**Slack-Off Allowance** Allow the following slack-off sheave movement for manufacturer's belt-length tolerance on the short side and to loosen the belt for mounting or removal			Total Sheave movement on cemters		
Belt Length (Inches)	All Cross-Sections	J	L	M	J	L	M
8-20	0.3	0.4			0.7		
Over 20-40	0.5	0.5			1.0		
Over 40-60	0.7	0.6	0.9		1.3	1.6	
Over 60-80	0.9	0.6	0.9		1.5	1.8	
Over 80-100	1.1	0.7	1.0	1.5	1.8	2.1	2.6
Over 100-120	1.3	0.8	1.1	1.6	2.1	2.4	2.9
Over 120-160	1.7		1.2	1.7		2.9	3.4
Over 160-200	2.2		1.3	1.8		3.5	4.0
Over 200-240	2.6		1.4	1.9		4.0	4.5
Over 240-300	3.3			2.2		5.5	
Over 300-360	3.9			2.3		6.2	
Over 360-420	4.6			2.6		7.2	
Over 420-480	5.2			2.9		8.1	
Over 480-540	5.8			3.2		9.0	
Over 540-600	6.5			3.6		10.1	

J DRIVE SELECTION TABLES

	SHEAVES Outside Diameters		DRIVEN RPM AND HORSEPOWER PER RIB						How to specify SHEAVE PART NUMBER For example: Sheave 6J25 6 (Grooves) J (Section) 2.50 (2.50" O.D.)					How to specify BELT PART NUMBER For example: Belt 550J6 550 (55.0" Nom E.L.) J (Section) 6 (Ribs)			
Speed Ratio	DriveR	DriveN	1160 RPM DriveR		1750 RPM DriveR		3450 RPM DriveR		NOMINAL BELT STANDARD EFF. LENGTHS - INCHES STOCK SIZES - 4, 6, 10 AND 16 RIB WIDTH								
			RPM	HP	RPM	HP	RPM	HP	18.0	19.0	20.0	22.0	24.0	26.0	28.0	30.0	32.0
									NOMINAL CENTER DISTANCE - INCHES								
1.00	1.50	1.50	1160	0.13	1750	0.18	3450	0.31	6.6	7.1	7.6	8.6	9.6	10.6	11.6	12.6	13.6
1.00	1.60	1.60	1160	0.14	1750	0.20	3450	0.35	6.5	7.0	7.5	8.5	9.5	10.5	11.5	12.5	13.5
1.00	1.70	1.70	1160	0.16	1750	0.22	3450	0.38	6.3	6.8	7.3	8.3	9.3	10.3	11.3	12.3	13.3
1.00	1.80	1.80	1160	0.17	1750	0.24	3450	0.42	6.2	6.7	7.2	8.2	9.2	10.2	11.2	12.2	13.2
1.00	1.90	1.90	1160	0.18	1750	0.26	3450	0.46	6.0	6.5	7.0	8.0	9.0	10.0	11.0	12.0	13.0
1.00	2.00	2.00	1160	0.20	1750	0.28	3450	0.49	5.9	6.4	6.9	7.9	8.9	9.9	10.9	11.9	12.9
1.00	2.12	2.12	1160	0.21	1750	0.30	3450	0.54	5.7	6.2	6.7	7.7	8.7	9.7	10.7	11.7	12.7
1.00	2.24	2.24	1160	0.23	1750	0.33	3450	0.58	5.5	6.0	6.5	7.5	8.5	9.5	10.5	11.5	12.5
1.00	2.36	2.36	1160	0.25	1750	0.35	3450	0.62	5.3	5.8	6.3	7.3	8.3	9.3	10.3	11.3	12.3
1.00	2.50	2.50	1160	0.26	1750	0.38	3450	0.67	5.1	5.6	6.1	7.1	8.1	9.1	10.1	11.1	12.1
1.00	2.65	2.65	1160	0.28	1750	0.41	3450	0.72	4.8	5.3	5.8	6.8	7.8	8.8	9.8	10.8	11.8
1.00	2.80	2.80	1160	0.30	1750	0.44	3450	0.77	4.6	5.1	5.6	6.6	7.6	8.6	9.6	10.6	11.6
1.00	3.00	3.00	1160	0.33	1750	0.47	3450	0.84	4.3	4.8	5.3	6.3	7.3	8.3	9.3	10.3	11.3
1.00	3.15	3.15	1160	0.35	1750	0.50	3450	0.89		4.6	5.1	6.1	7.1	8.1	9.1	10.1	11.1
1.00	3.35	3.35	1160	0.38	1750	0.54	3450	0.95			4.7	5.7	6.7	7.7	8.7	9.7	10.7
1.00	4.50	4.50	1160	0.52	1750	0.75	3450	1.30						5.9	6.9	7.9	8.9
1.05	1.90	2.00	1104	0.19	1666	0.26	3285	0.46	5.9	6.4	6.9	7.9	8.9	9.9	10.9	11.9	12.9
1.05	2.24	2.36	1104	0.23	1666	0.33	3285	0.59	5.4	5.9	6.4	7.4	8.4	9.4	10.4	11.4	12.4
1.05	3.00	3.15	1104	0.33	1666	0.48	3285	0.85		4.7	5.2	6.2	7.2	8.2	9.2	10.2	11.2
1.06	1.60	1.70	1094	0.14	1650	0.20	3254	0.36	6.4	6.9	7.4	8.4	9.4	10.4	11.4	12.4	13.4
1.06	1.70	1.80	1094	0.16	1650	0.22	3254	0.39	6.3	6.8	7.3	8.3	9.3	10.3	11.3	12.3	13.3
1.06	1.80	1.90	1094	0.17	1650	0.24	3254	0.43	6.1	6.6	7.1	8.1	9.1	10.1	11.1	12.1	13.1
1.06	2.00	2.12	1094	0.20	1650	0.28	3254	0.50	5.8	6.3	6.8	7.8	8.8	9.8	10.8	11.8	12.8
1.06	2.12	2.24	1094	0.22	1650	0.31	3254	0.54	5.6	6.1	6.6	7.6	8.6	9.6	10.6	11.6	12.6
1.06	2.36	2.50	1094	0.25	1650	0.35	3254	0.63	5.2	5.7	6.2	7.2	8.2	9.2	10.2	11.2	12.2
1.06	2.50	2.65	1094	0.27	1650	0.38	3254	0.68	5.0	5.5	6.0	7.0	8.0	9.0	10.0	11.0	12.0
1.06	2.65	2.80	1094	0.29	1650	0.41	3254	0.73	4.7	5.2	5.7	6.7	7.7	8.7	9.7	10.7	11.7
1.06	3.15	3.35	1094	0.35	1650	0.51	3254	0.90		4.4	4.9	5.9	6.9	7.9	8.9	9.9	10.9
1.07	1.50	1.60	1084	0.13	1635	0.18	3224	0.32	6.6	7.1	7.6	8.6	9.6	10.6	11.6	12.6	13.3
1.07	2.80	3.00	1084	0.31	1635	0.44	3224	0.78	4.4	4.9	5.4	6.4	7.4	8.4	9.4	10.4	11.4
1.11	1.80	2.00	1045	0.17	1576	0.25	3108	0.43	6.0	6.5	7.0	8.0	9.0	10.0	11.0	12.0	13.0
1.11	2.12	2.36	1045	0.22	1576	0.31	3108	0.55	5.5	6.0	6.5	7.5	8.5	9.5	10.5	11.5	12.5
1.12	1.70	1.90	1035	0.16	1562	0.23	3080	0.40	6.2	6.7	7.2	8.2	9.2	10.2	11.2	12.2	13.2
1.12	1.90	2.12	1035	0.19	1562	0.27	3080	0.47	5.8	6.3	6.8	7.8	8.8	9.8	10.8	11.8	12.8
1.12	2.00	2.24	1035	0.20	1562	0.29	3080	0.51	5.7	6.2	6.7	7.7	8.7	9.7	10.7	11.7	12.7
1.12	2.24	2.50	1035	0.23	1562	0.33	3080	0.59	5.3	5.8	6.3	7.3	8.3	9.3	10.3	11.3	12.3
1.12	2.36	2.65	1035	0.25	1562	0.36	3080	0.64	5.1	5.6	6.1	7.1	8.1	9.1	10.1	11.1	12.1
1.12	2.50	2.80	1035	0.27	1562	0.38	3080	0.68	4.8	5.3	5.8	6.8	7.8	8.8	9.8	10.8	11.8
1.12	3.00	3.35	1035	0.34	1562	0.48	3080	0.85		4.5	5.0	6.0	7.0	8.0	9.0	10.0	11.0
1.13	1.50	1.70	1026	0.13	1548	0.19	3053	0.33	6.5	7.0	7.5	8.5	9.5	10.5	11.5	12.5	13.5
1.13	1.60	1.80	1026	0.15	1548	0.21	3053	0.36	6.3	6.8	7.3	8.3	9.3	10.3	11.3	12.3	13.3
1.13	2.65	3.00	1026	0.29	1548	0.41	3053	0.74	4.6	5.1	5.6	6.6	7.6	8.6	9.6	10.6	11.6
1.13	2.80	3.15	1026	0.31	1548	0.44	3053	0.79	4.3	4.8	5.3	6.3	7.3	8.3	9.3	10.3	11.3
1.18	1.70	2.00	983	0.16	1483	0.23	2923	0.40	6.1	6.6	7.1	8.1	9.1	10.1	11.1	12.1	13.1
1.18	1.80	2.12	983	0.18	1483	0.25	2923	0.44	5.9	6.4	6.9	7.9	8.9	9.9	10.9	11.9	12.9
1.18	1.90	2.24	983	0.19	1483	0.27	2923	0.48	5.7	6.2	6.7	7.7	87.	9.7	10.7	11.7	12.7
1.18	2.00	2.36	983	0.20	1483	0.29	2923	0.51	5.6	6.1	6.6	7.6	8.6	9.6	10.6	11.6	12.6
1.18	2.12	2.50	983	0.22	1483	0.31	2923	0.56	5.4	5.9	6.4	7.4	8.4	9.4	10.4	11.4	12.4
1.18	2.24	2.65	983	0.24	1483	0.34	2923	0.60	5.2	5.7	6.2	7.2	8.2	9.2	10.2	11.2	12.2
1.19	1.60	1.90	974	0.15	1470	0.21	2899	0.37	6.3	6.8	7.3	8.3	9.3	10.3	11.3	12.3	13.3
1.19	2.36	2.80	974	0.25	1470	0.36	2899	0.64	4.9	5.4	5.9	6.9	7.9	8.9	9.9	10.9	11.9
1.19	2.65	3.15	974	0.29	1470	0.42	2899	0.74	4.4	4.9	5.4	6.4	7.4	8.4	9.4	10.4	11.4
1.20	1.50	1.80	966	0.13	1458	0.19	2875	0.33	6.4	6.9	7.4	8.4	9.4	10.4	11.4	12.4	13.4
1.20	2.50	3.00	966	0.27	1458	0.39	2875	0.69	4.7	5.2	5.7	6.7	7.7	8.7	9.7	10.7	11.7
1.20	2.80	3.35	966	0.31	1458	0.45	2875	0.79		4.7	5.2	6.2	7.2	8.2	9.2	10.2	11.2
1.24	1.80	2.24	935	0.18	1411	0.25	2782	0.44	5.8	6.3	6.8	7.8	8.8	9.8	10.8	11.8	12.8
1.24	1.90	2.36	935	0.19	1411	0.27	2782	0.48	5.7	6.2	6.7	7.7	8.7	9.7	10.7	11.7	12.7
1.25	1.60	2.00	928	0.15	1400	0.21	2760	0.37	6.2	6.7	7.2	8.2	9.2	10.2	11.2	12.2	13.2
1.25	1.70	2.12	928	0.16	1400	0.23	2760	0.41	6.0	6.5	7.0	8.0	9.0	10.0	11.0	12.0	13.0
1.25	2.00	2.50	928	0.20	1400	0.29	2760	0.52	5.5	6.0	6.5	7.5	8.5	9.5	10.5	11.5	12.5
1.25	2.12	2.65	928	0.22	1400	0.32	2760	0.56	5.2	5.7	6.2	7.3	8.3	9.3	10.3	11.3	12.3
1.25	2.24	2.80	928	0.24	1400	0.34	2760	0.60	5.0	5.5	6.0	7.0	8.0	9.0	10.0	11.0	12.0
1.26	2.50	3.15	920	0.27	1388	0.39	2738	0.69	4.6	5.1	5.6	6.6	7.6	8.6	9.6	10.6	11.6
1.26	2.65	3.35	920	0.29	1388	0.42	2738	0.75	4.3	4.8	5.3	6.3	7.3	8.3	9.3	10.3	11.3
1.27	1.50	1.90	913	0.14	1377	0.19	2716	0.34	6.3	6.8	7.3	8.3	9.3	10.3	11.3	12.3	13.3
1.27	2.36	3.00	913	0.25	1377	0.36	2716	0.65	4.8	5.3	5.8	6.8	7.8	8.8	9.8	10.8	11.8
1.31	1.80	2.36	885	0.18	1335	0.25	2633	0.45	5.7	6.2	6.7	7.7	8.7	9.7	10.7	11.7	12.7
1.32	1.70	2.24	878	0.16	1325	0.23	2613	0.41	5.9	6.4	6.9	7.9	8.9	9.9	10.9	11.9	12.9
1.32	1.90	2.50	878	0.19	1325	0.27	2613	0.48	5.5	6.0	6.5	7.5	8.5	9.5	10.5	11.5	12.5
1.32	2.12	2.80	878	0.22	1325	0.32	2613	0.56	5.1	5.6	6.1	7.1	8.1	9.1	10.1	11.1	12.1
1.33	1.50	2.00	872	0.14	1315	0.19	2594	0.34	6.2	6.7	7.2	8.2	9.2	10.2	11.2	12.2	13.3
1.33	1.60	2.12	872	0.15	1315	0.21	2594	0.37	6.1	6.6	7.1	8.1	9.1	10.1	11.1	12.1	13.1
1.33	2.00	2.65	872	0.21	1315	0.29	2594	0.52	5.3	5.8	6.3	7.3	8.3	9.3	10.3	11.3	12.3
1.33	2.36	3.15	872	0.26	1315	0.36	2594	0.65	4.7	5.2	5.7	6.7	7.7	8.7	9.7	10.7	11.7
1.33	4.50	6.00	872	0.53	1315	0.76	2594	1.33								6.7	7.7
ARC LENGTH FACTOR →									.80			.90					

J SPEED RATIO RANGE 1.00 - 1.33

Drive Grooves. 4 6 10 16
Drive Belt Width. . . . . 0.37" 0.55" 0.92" 1.47"
Drive Diameter. . . . . See page 194 for stock sheaves.

NOMINAL BELT STANDARD EFF. LENGTHS - INCHES

34.0	36.0	38.0	40.0	43.0	46.0	49.0	52.0	55.0	58.0	61.0	65.0	69,0	73.0	77.0	82.0	87.0	92.0	98.0
NOMINAL CENTER DISTANCES - INCHES																		
14.6	15.6	16.6	17.6	19.1	20.5	22.1	23.6	25.1	26.6	28.1	30.1	32.1	34.1	36.1	38.6	41.1	43.6	46.6
14.5	15.5	16.5	17.5	19.0	20.5	22.0	23.5	25.0	26.5	28.0	30.0	32.0	34.0	36.0	38.5	41.0	43.5	46.5
14.3	15.3	16.3	17.3	18.8	20.3	21.8	23.3	24.8	26.3	27.8	29.8	31.8	33.8	35.8	38.3	40.8	43.3	46.3
14.2	15.2	16.2	17.2	18.7	20.2	21.7	23.2	24.7	26.2	27.7	29.7	31.7	33.7	35.7	38.2	40.7	43.2	46.2
14.0	15.0	16.0	17.0	18.5	20.0	21.5	23.0	24.5	26.0	27.5	29.5	31.5	33.5	35.5	38.0	40.5	43.0	46.0
13.9	14.9	15.9	16.9	18.4	19.9	21.4	22.9	24.4	25.9	27.4	29.4	31.4	33.4	35.4	37.9	40.4	42.9	45.9
13.7	14.7	15.7	16.7	18.2	19.7	21.2	22.7	24.2	25.7	27.2	29.2	31.2	33.2	35.2	37.7	40.2	42.7	45.7
13.5	14.5	15.5	16.5	18.0	19.5	21.0	22.5	24.0	25.5	27.0	29.0	31.0	33.0	35.0	37.5	40.0	42.5	45.5
13.3	14.3	15.3	16.3	17.8	19.3	20.8	22.3	23.8	25.3	26.8	28.8	30.8	32.8	34.8	37.3	39.8	42.3	45.3
13.1	14.1	15.1	16.1	17.6	19.1	20.6	22.1	23.6	25.1	26.6	28.6	30.6	32.6	34.6	37.1	39.6	42.1	45.1
12.8	13.8	14.8	15.8	17.3	18.8	20.3	21.8	23.3	24.8	26.3	28.3	30.3	32.3	34.3	36.8	39.3	41.8	44.8
12.6	13.6	14.6	15.6	17.1	18.6	20.1	21.6	23.1	24.6	26.1	28.1	30.1	32.1	34.1	36.6	39.1	41.6	44.6
12.3	13.3	14.3	15.3	16.8	18.3	19.8	21.3	22.8	24.3	25.8	27.8	29.8	31.8	33.8	36.3	38.8	41.3	44.3
12.1	13.1	14.1	15.1	16.6	18.1	19.6	21.1	22.6	24.1	25.6	27.6	29.6	31.6	33.6	36.1	38.6	41.1	44.1
11.7	12.7	13.7	14.7	16.2	17.7	19.2	20.7	22.2	23.7	25.2	27.2	29.2	31.2	33.2	35.7	38.2	40.7	43.7
9.9	10.9	11.9	12.9	14.4	15.9	17.4	18.9	20.4	21.9	23.4	25.4	27.4	29.4	31.4	33.9	36.4	38.9	41.9
13.9	14.9	15.9	16.9	18.4	19.9	21.4	22.9	24.4	25.9	27.4	29.4	31.4	33.4	35.4	37.9	40.4	42.9	45.9
13.4	14.4	15.4	16.4	17.9	19.4	20.9	22.4	23.9	25.4	26.9	28.9	30.9	32.9	34.9	37.4	39.9	42.4	45.4
12.2	13.2	14.2	15.2	16.7	18.2	19.7	21.2	22.7	24.2	25.7	27.7	29.7	31.7	33.7	36.2	38.7	41.2	44.2
14.4	15.4	16.4	17.4	18.9	20.4	21.9	23.4	24.9	26.4	27.9	29.9	31.9	33.9	35.9	38.4	40.9	43.4	46.4
14.3	15.3	16.3	17.3	18.8	20.3	21.8	23.3	24.8	26.3	27.8	29.8	31.8	33.8	35.8	38.3	40.8	43.3	46.3
14.1	15.1	16.1	17.1	18.6	20.1	21.6	23.1	24.6	26.1	27.6	29.6	31.6	33.6	35.6	38.1	40.6	43.1	46.1
13.8	14.8	15.8	16.8	18.3	19.8	21.3	22.8	24.3	25.8	27.3	29.3	31.3	33.3	35.3	37.8	40.3	42.8	45.8
13.6	14.6	15.6	16.6	18.1	19.6	21.1	22.6	24.1	25.6	27.1	29.1	31.1	33.1	35.1	37.6	40.1	42.6	45.6
13.2	14.2	15.2	16.2	17.7	19.2	20.7	22.2	23.7	25.2	26.7	28.7	30.7	32.7	34.7	37.2	39.7	42.2	45.2
13.0	14.0	15.0	16.0	17.5	19.0	20.5	22.0	23.5	25.0	26.5	28.5	30.5	32.5	34.5	37.0	39.5	42.0	45.0
12.7	13.7	14.7	15.7	17.2	18.7	20.2	21.7	23.2	24.7	26.2	28.2	30.2	32.2	34.2	36.7	39.2	41.7	44.7
11.9	12.9	13.9	14.9	16.4	17.9	19.4	20.9	22.4	23.9	25.4	27.4	29.4	31.4	33.4	35.9	38.4	40.9	43.9
14.6	15.6	16.6	17.6	19.1	20.6	22.1	23.6	25.1	26.6	28.1	30.1	32.1	34.1	36.1	38.6	41.1	43.6	46.6
12.4	13.4	14.4	15.4	16.9	18.4	19.9	21.4	22.9	24.4	25.9	27.9	29.9	31.9	33.9	36.4	38.9	41.4	44.4
14.0	15.0	16.0	17.0	18.5	20.0	21.5	23.0	24.5	26.0	27.5	29.5	31.5	33.5	35.5	38.0	40.5	43.0	46.0
13.5	14.5	15.5	16.5	18.0	19.5	21.0	22.5	24.0	25.5	27.0	29.0	31.0	33.0	35.0	37.5	40.0	42.5	45.5
14.2	15.2	16.2	17.2	18.7	20.2	21.7	23.2	24.7	26.2	27.7	29.7	31.7	33.7	35.7	38.2	40.7	43.2	46.2
13.8	14.8	15.8	16.8	18.3	19.8	21.3	22.8	24.3	25.8	27.3	29.3	31.3	33.3	35.3	37.8	40.3	42.8	45.8
13.7	14.7	15.7	16.7	18.2	19.7	21.2	22.7	24.2	25.7	27.2	29.2	31.2	33.2	35.2	37.7	40.2	42.7	45.7
13.3	14.3	15.3	16.3	17.8	19.3	20.8	22.3	23.8	25.3	26.8	28.8	30.8	32.8	34.8	37.3	39.8	42.3	45.3
13.1	14.1	15.1	16.1	17.6	19.1	20.6	22.1	23.6	25.1	26.6	28.6	30.6	32.6	34.6	37.1	39.6	42.1	45.1
12.8	13.8	14.8	15.8	17.3	18.8	20.3	21.8	23.3	24.8	26.3	28.3	30.3	32.3	34.3	36.8	39.3	41.8	44.8
12.6	13.6	14.6	15.6	17.1	18.6	20.1	21.6	23.1	24.6	26.1	28.1	30.1	32.1	34.1	36.6	39.1	41.6	44.6
12.3	13.3	14.3	15.3	16.8	18.3	19.8	21.3	22.8	24.3	25.8	27.8	29.8	31.8	33.8	36.3	38.8	41.3	44.3
12.1	13.1	14.1	15.1	16.6	18.1	19.6	21.1	22.6	24.1	25.6	27.6	29.6	31.6	33.6	36.1	38.6	41.1	44.1
11.7	12.7	13.7	14.7	16.2	17.7	19.2	20.7	22.2	23.7	25.2	27.2	29.2	31.2	33.2	35.7	38.2	40.7	43.7
9.9	10.9	11.9	12.9	14.4	15.9	17.4	18.9	20.4	21.9	23.4	25.4	27.4	29.4	31.4	33.9	36.4	38.9	41.9
13.9	14.9	15.9	16.9	18.4	19.9	21.4	22.9	24.4	25.9	27.4	29.4	31.4	33.4	35.4	37.9	40.4	42.9	45.9
13.4	14.4	15.4	16.4	17.9	19.4	20.9	22.4	23.9	25.4	26.9	28.9	30.9	32.9	34.9	37.4	39.9	42.4	45.4
12.2	13.2	14.2	15.2	16.7	18.2	19.7	21.2	22.7	24.2	25.7	27.7	29.7	31.7	33.7	36.2	38.7	41.2	44.2
14.4	15.4	16.4	17.4	18.9	20.4	21.9	23.4	24.9	26.4	27.9	29.9	31.9	33.9	35.9	38.4	40.9	43.4	46.4
13.7	14.7	15.7	16.7	18.2	19.7	21.2	22.7	24.2	25.7	27.2	29.2	31.2	33.2	35.2	37.7	40.2	42.7	45.7
13.6	14.6	15.6	16.6	18.1	19.6	21.1	22.6	24.1	25.6	27.1	29.1	31.1	33.1	35.1	37.6	40.1	42.6	45.6
13.4	14.4	15.4	16.4	17.9	19.4	20.9	22.4	23.9	25.4	26.9	28.9	30.9	32.9	34.9	37.4	39.9	42.4	45.4
13.2	14.2	15.2	16.2	17.7	19.2	20.7	22.2	23.7	25.2	26.7	28.7	30.7	32.7	34.7	37.2	39.7	42.2	45.2
14.3	15.3	16.3	17.3	18.8	20.3	21.8	23.3	24.8	26.3	27.8	29.8	31.8	33.8	35.8	38.3	40.8	43.3	46.3
12.9	13.9	14.9	15.9	17.4	18.9	20.4	21.9	23.4	24.9	26.4	28.4	30.4	32.4	34.4	36.9	39.4	41.9	44.9
12.4	13.4	14.4	15.4	16.9	18.4	19.9	21.4	22.9	24.4	25.9	27.9	29.9	31.9	33.9	36.4	38.9	41.4	44.4
14.4	15.4	16.4	17.4	18.9	20.4	21.9	23.4	24.9	26.4	27.9	29.9	31.9	33.9	35.9	38.4	40.9	43.4	46.4
12.7	13.7	14.7	15.7	17.2	18.7	20.2	21.7	23.2	24.7	26.2	28.2	30.2	32.2	34.2	36.7	39.2	41.7	44.7
12.2	13.2	14.2	15.2	16.7	18.2	19.7	21.2	22.7	24.2	25.7	27.7	29.7	31.7	33.7	36.2	38.7	41.2	44.2
13.8	14.8	15.8	16.8	18.3	19.8	21.3	22.8	24.3	25.8	27.3	29.3	31.3	33.3	35.3	37.8	40.3	42.8	45.8
13.7	14.7	15.7	16.7	18.2	19.7	21.2	22.7	24.2	25.7	27.2	29.2	31.2	33.2	35.2	37.7	40.2	42.7	45.7
14.2	15.2	16.2	17.2	18.7	20.2	21.7	23.2	24.7	26.2	27.7	29.7	31.7	33.7	35.7	38.2	40.7	43.2	46.2
14.0	15.0	16.0	17.0	18.5	20.0	21.5	23.0	24.5	26.0	27.5	29.5	31.5	33.5	35.5	38.0	40.5	43.0	46.0
13.5	14.5	15.5	16.5	18.0	19.5	21.0	22.5	24.0	25.5	27.0	29.0	31.0	33.0	35.0	37.5	40.0	42.5	45.5
13.3	14.3	15.3	16.3	17.8	19.3	20.8	22.3	23.8	25.3	26.8	28.8	30.8	32.8	34.8	37.3	39.8	42.3	45.3
13.0	14.0	15.0	16.0	17.5	19.0	20.5	22.0	23.5	25.0	26.5	28.5	30.5	32.5	34.5	37.0	39.5	42.0	45.0
12.6	13.6	14.6	15.6	17.1	18.6	20.1	21.6	23.1	24.6	26.1	28.1	30.1	32.1	34.1	36.6	39.1	41.6	44.6
12.3	13.3	14.3	15.3	16.8	18.3	19.8	21.3	22.8	24.3	25.8	27.8	29.8	31.8	33.8	36.3	38.8	41.3	44.3
14.3	15.3	16.3	17.3	18.8	20.3	21.8	23.3	24.8	26.3	27.8	29.8	31.8	33.8	35.8	38.3	40.8	43.3	46.3
12.8	13.8	14.8	15.8	17.3	18.8	20.3	21.8	23.3	24.8	26.3	28.3	30.3	32.3	34.3	36.8	39.3	41.8	44.8
13.7	14.7	15.7	16.7	18.2	19.7	21.2	22.7	24.2	25.7	27.2	29.2	31.2	33.2	35.2	37.7	40.2	42.7	45.7
13.9	14.9	15.9	16.9	18.4	19.9	21.4	22.9	24.4	25.9	27.4	29.4	31.4	33.4	35.4	37.9	40.4	42.9	45.9
13.5	14.5	15.5	16.5	18.0	19.5	21.0	22.5	24.0	25.5	27.0	29.0	31.0	33.0	35.0	37.5	40.0	42.5	45.5
13.1	14.1	15.1	16.1	17.6	19.1	20.6	22.1	23.6	25.1	26.6	28.6	30.6	32.6	34.6	37.1	39.6	42.1	45.1
14.3	15.3	16.3	17.3	18.8	20.3	21.8	23.3	24.8	26.3	27.8	29.8	31.8	33.8	35.8	38.3	40.8	43.3	46.3
14.1	15.1	16.1	17.1	18.6	20.1	21.6	23.1	24.6	26.1	27.6	29.6	31.6	33.6	35.6	38.1	40.6	43.1	46.1
13.3	14.3	15.3	16.3	17.8	19.3	20.8	22.3	23.8	25.3	26.8	28.8	30.8	32.8	34.8	37.3	39.8	42.3	45.3
12.7	13.7	14.7	15.7	17.2	18.7	20.2	21.7	23.2	24.7	26.2	28.2	30.2	32.2	34.2	36.7	39.2	41.7	44.7
8.7	9.7	10.7	11.7	13.2	14.7	16.2	17.7	19.2	20.7	22.2	24.2	26.2	28.2	30.2	32.7	35.2	37.8	40.8
			1.00							1.08						1.15		

J DRIVE SELECTION TABLES

	SHEAVES Outside Diameters		DRIVEN RPM AND HORSEPOWER PER RIB						How to specify SHEAVE PART NUMBER For example: Sheave 6J25 6 (Grooves) J (Section) 2.50 (2.50" O.D.)					How to specify BELT PART NUMBER For example: Belt 550J6 550 (55.0" Nom E.L.) J (Section) 6 (Ribs)			
									NOMINAL BELT STANDARD EFF. LENGTHS - INCHES STOCK SIZES - 4, 6, 10 AND 16 RIB WIDTH								
Speed Ratio	DriveR	DriveN	1160 RPM DriveR		1750 RPM DriveR		3450 RPM DriveR		18.0	19.0	20.0	22.0	24.0	26.0	28.0	30.0	32.0
			RPM	HP	RPM	HP	RPM	HP	NOMINAL CENTER DISTANCE - INCHES								
1.34	2.24	3.00	865	0.24	1305	0.34	2574	0.61	4.9	5.4	5.9	6.9	7.9	8.9	9.9	10.9	11.9
1.34	2.50	3.35	865	0.27	1305	0.39	2574	0.70	4.4	4.9	5.4	6.4	7.4	8.4	9.4	10.4	11.4
1.34	3.35	4.50	865	0.39	1305	0.55	2574	0.98					5.8	6.8	7.8	8.8	9.8
1.39	1.70	2.36	834	0.17	1259	0.23	2482	0.41	5.8	6.3	6.8	7.8	8.8	9.8	10.8	11.8	12.8
1.39	1.80	2.50	834	0.18	1259	0.25	2482	0.45	5.6	6.1	6.6	7.6	8.6	9.6	10.6	11.6	12.6
1.39	1.90	2.65	834	0.19	1259	0.27	2482	0.49	5.4	5.9	6.4	7.4	8.4	9.4	10.4	11.4	12.4
1.40	1.60	2.24	828	0.15	1250	0.21	2464	0.38	6.0	6.5	7.0	8.0	9.0	10.0	11.0	12.0	13.0
1.40	2.00	2.80	828	0.21	1250	0.29	2464	0.52	5.2	5.7	6.2	7.2	8.2	9.2	10.2	11.2	12.2
1.41	1.50	2.12	822	0.14	1241	0.19	2446	0.34	6.2	6.7	7.2	8.2	9.2	10.2	11.2	12.2	13.2
1.41	2.24	3.15	822	0.24	1241	0.34	2446	0.61	4.7	5.2	5.8	6.8	7.8	8.8	9.8	10.8	11.8
1.42	2.12	3.00	816	0.22	1232	0.32	2429	0.57	5.0	5.5	6.0	7.0	8.0	9.0	10.0	11.0	12.0
1.42	2.36	3.35	816	0.26	1232	0.37	2429	0.65	4.5	5.0	5.5	6.5	7.5	8.5	9.5	10.5	11.5
1.43	3.15	4.50	811	0.36	1223	0.52	2412	0.92				4.9	6.0	7.0	8.0	9.0	10.0
1.47	1.70	2.50	789	0.17	1190	0.24	2346	0.42	5.7	6.2	6.7	7.7	8.7	9.7	10.7	11.7	12.7
1.47	1.80	2.65	789	0.18	1190	0.26	2346	0.45	5.5	6.0	6.5	7.5	8.5	9.5	10.5	11.5	12.5
1.47	1.90	2.80	789	0.19	1190	0.28	2346	0.49	5.3	5.8	6.3	7.3	8.3	9.3	10.3	11.3	12.3
1.48	1.60	2.36	783	0.15	1182	0.22	2331	0.38	5.9	6.4	6.9	7.9	8.9	9.9	10.9	11.9	12.9
1.49	1.50	2.24	778	0.14	1174	0.20	2315	0.34	6.1	6.6	7.1	8.1	9.1	10.1	11.1	12.1	13.1
1.49	2.12	3.15	778	0.22	1174	0.32	2315	0.57	4.8	5.3	5.8	6.8	7.8	8.8	9.8	10.9	11.9
1.50	2.00	3.00	773	0.21	1166	0.30	2300	0.53	5.1	5.6	6.1	7.1	8.1	9.1	10.1	11.1	12.1
1.50	2.24	3.35	773	0.24	1166	0.34	2300	0.61	4.6	5.1	5.6	6.6	7.6	8.6	9.6	10.6	11.6
1.50	3.00	4.50	773	0.34	1166	0.49	2300	0.87				5.1	6.1	7.1	8.1	9.1	10.1
1.56	1.60	2.50	743	0.15	1121	0.22	2211	0.38	5.8	6.3	6.8	7.8	8.8	9.8	10.8	11.8	12.8
1.56	1.70	2.65	743	0.17	1121	0.24	2211	0.42	5.6	6.1	6.6	7.6	8.6	9.6	10.6	11.6	12.6
1.56	1.80	2.80	743	0.18	1121	0.26	2211	0.45	5.4	5.9	6.4	7.4	8.4	9.4	10.4	11.4	12.4
1.57	1.50	2.36	738	0.14	1114	0.20	2197	0.34	6.0	6.5	7.0	8.0	9.0	10.0	11.0	12.0	13.0
1.58	1.90	3.00	734	0.19	1107	0.28	2183	0.49	5.1	5.6	6.1	71.1	8.1	9.1	10.1	11.1	12.1
1.58	2.00	3.15	734	0.21	1107	0.30	2183	0.53	4.9	5.4	5.9	6.9	7.9	8.9	9.9	10.9	11.9
1.58	2.12	3.35	734	0.22	1107	0.32	2183	0.57	4.7	5.2	5.7	6.7	7.7	8.7	9.7	10.7	11.7
1.61	2.80	4.50	720	0.32	1086	0.45	2142	0.81				5.2	6.2	7.2	8.2	9.2	10.2
1.65	1.70	2.80	703	0.17	1060	0.24	2090	0.42	5.4	5.9	6.4	7.4	8.4	9.5	10.5	11.5	12.5
1.66	1.60	2.65	698	0.15	1054	0.22	2078	0.38	5.6	6.1	6.6	7.6	8.6	9.6	10.7	11.7	12.7
1.66	1.90	3.15	698	0.19	1054	0.28	2078	0.49	5.0	5.5	6.0	7.0	8.0	9.0	10.0	11.0	12.0
1.67	1.50	2.50	694	0.14	1047	0.20	2065	0.34	5.8	6.3	6.8	7.8	8.8	9.8	10.8	11.8	12.9
1.67	1.80	3.00	694	0.18	1047	0.26	2065	0.46	5.2	5.7	6.2	7.2	8.2	9.2	10.2	11.2	12.2
1.68	2.00	3.35	690	0.21	1041	0.30	2053	0.53	4.8	5.3	5.8	6.8	7.8	8.8	9.8	10.8	11.8
1.70	2.65	4.50	682	0.30	1029	0.42	2029	0.76				5.3	6.3	7.3	8.3	9.3	10.3
1.75	1.60	2.80	662	0.15	1000	0.22	1971	0.38	5.5	6.0	6.5	7.5	8.5	9.5	10.5	11.5	12.5
1.75	1.80	3.15	662	0.18	1000	0.26	1971	0.46	5.1	5.6	6.1	7.1	8.1	9.1	10.1	11.1	12.1
1.76	1.70	3.00	659	0.17	994	0.24	1960	0.42	5.3	5.8	6.3	7.3	8.3	9.3	10.3	11.3	12.3
1.76	1.90	3.35	659	0.20	994	0.28	1960	0.49	4.8	5.3	5.8	6.8	7.8	8.8	9.9	10.9	11.9
1.77	1.50	2.65	655	0.14	988	0.20	1949	0.35	5.7	6.2	6.7	7.7	8.7	9.7	10.7	11.7	12.7
1.78	4.50	8.00	651	0.54	983	0.77	1938	1.34									
1.79	3.35	6.00	648	0.39	977	0.56	1927	0.99							6.5	7.5	8.6
1.80	2.50	4.50	644	0.28	972	0.40	1916	0.70				5.4	6.4	7.4	8.4	9.5	10.5
1.85	1.70	3.15	627	0.17	945	0.24	1864	0.42	5.1	5.6	6.2	7.2	8.2	9.2	10.2	11.2	12.2
1.86	1.80	3.35	623	0.18	940	0.26	1854	0.46	4.9	5.4	5.9	6.9	7.9	8.9	9.9	10.9	11.9
1.87	1.50	2.80	620	0.14	935	0.20	1844	0.35	5.6	6.1	6.6	7.6	8.6	9.6	10.6	11.6	12.6
1.88	1.60	3.00	617	0.15	930	0.22	1835	0.38	5.3	5.8	6.4	7.4	8.4	9.4	10.4	11.4	12.4
1.90	3.15	6.00	610	0.36	920	0.52	1815	0.92							6.7	7.7	8.7
1.91	2.36	4.50	607	0.26	916	0.37	1806	0.66				5.5	6.5	7.5	8.5	9.6	10.6
1.97	1.60	3.15	588	0.15	888	0.22	1751	0.38	5.2	5.7	6.2	7.2	8.2	9.2	10.2	11.2	12.2
1.97	1.70	3.35	588	0.17	888	0.24	1751	0.42	5.0	5.5	6.0	7.0	8.0	9.0	10.0	11.0	12.0
2.00	1.50	3.00	580	0.14	875	0.20	1725	0.35	5.4	5.9	6.4	7.4	8.4	9.4	10.4	11.4	12.4
2.00	3.00	6.00	580	0.34	875	0.49	1725	0.88						5.7	6.8	7.8	8.8
2.01	2.24	4.50	577	0.24	870	0.35	1716	0.62			4.6	5.6	6.6	7.6	8.6	9.6	10.6
2.09	1.60	3.35	555	0.15	837	0.22	1650	0.38	5.0	5.5	6.1	7.1	8.1	9.1	10.1	11.1	12.1
2.10	1.50	3.15	552	0.14	833	0.20	1642	0.35	5.3	5.8	6.3	7.3	8.3	9.3	10.3	11.3	12.3
2.12	2.12	4.50	547	0.23	825	0.32	1627	0.57			4.7	5.7	6.7	7.7	8.7	9.7	10.7
2.14	2.80	6.00	542	0.32	817	0.45	1612	0.81						5.9	6.9	7.9	8.9
2.23	1.50	3.35	520	0.14	784	0.20	1547	0.35	5.1	5.6	6.1	7.1	8.1	9.1	10.2	11.2	12.2
2.25	2.00	4.50	515	0.21	777	0.30	1533	0.53			4.7	5.8	6.8	7.8	8.8	9.8	10.8
2.26	2.65	6.00	513	0.30	774	0.43	1526	0.76						6.0	7.0	8.0	9.1
2.36	4.50	10.60	491	0.54	741	0.77	1461	1.34									
2.37	1.90	4.50	489	0.20	738	0.28	1455	0.49			4.8	5.8	6.9	7.9	8.9	9.9	10.9
2.39	3.35	8.00	485	0.39	732	0.56	1443	0.99									
2.40	2.50	6.00	483	0.28	729	0.40	1437	0.71						6.1	7.1	8.1	9.2
2.50	1.80	4.50	464	0.18	700	0.26	1380	0.46		4.3	4.9	5.9	6.9	7.9	9.0	10.0	11.0
2.54	2.36	6.00	456	0.26	689	0.37	1358	0.66						6.2	7.2	8.2	9.3
2.54	3.15	8.00	456	0.36	689	0.52	1358	0.93									6.8
2.65	1.70	4.50	437	0.17	660	0.24	1301	0.42		4.4	4.9	6.0	7.0	8.0	9.0	10.0	11.0
2.67	3.00	8.00	434	0.34	655	0.49	1292	0.88									6.9
2.68	2.24	6.00	432	0.24	653	0.35	1287	0.62						6.2	7.3	8.3	9.3
2.81	1.60	4.50	412	0.15	622	0.22	1227	0.39		4.5	5.0	6.0	7.1	8.1	9.1	10.1	11.1
2.83	2.12	6.00	409	0.23	618	0.32	1219	0.57					5.3	6.3	7.4	8.4	9.4
ARC LENGTH FACTOR →									.75			.80				.90	

J SPEED RATIO RANGE 1.34 - 2.83

Drive Grooves. 4 6 10 16
Drive Belt Width. . . . . 0.37" 0.55" 0.92" 1.47"
Drive Diameter. . . . . See page 194 for stock sheaves.

NOMINAL BELT STANDARD EFF. LENGTHS - INCHES

34.0	36.0	38.0	40.0	43.0	46.0	49.0	52.0	55.0	58.0	61.0	65.0	69,0	73.0	77.0	82.0	87.0	92.0	98.0
NOMINAL CENTER DISTANCES - INCHES																		
12.9	13.9	14.9	15.9	17.4	18.9	20.4	21.9	23.4	24.9	26.4	28.4	30.4	32.4	34.4	36.9	39.4	41.9	44.9
12.4	13.4	14.4	15.4	16.9	18.4	19.9	21.4	22.9	24.4	25.9	27.9	29.9	31.9	33.9	36.4	38.9	41.4	44.4
10.8	11.8	12.8	13.8	15.3	16.8	18.3	19.8	21.3	22.8	24.3	26.3	28.3	30.3	32.3	34.8	37.3	39.8	42.8
13.8	14.8	15.8	16.8	18.3	19.8	21.3	22.8	24.3	25.8	27.3	29.3	31.3	33.3	35.3	37.8	40.3	42.8	45.8
13.6	14.6	15.6	16.6	18.1	19.6	21.1	22.6	24.1	25.6	27.1	29.1	31.1	33.1	35.1	37.6	40.1	42.6	45.6
13.4	14.4	15.4	16.4	17.9	19.4	20.9	22.4	23.9	25.4	26.9	28.9	30.9	32.9	34.9	37.4	39.9	42.4	45.4
14.0	15.0	16.0	17.0	18.5	20.0	21.5	23.0	24.5	26.0	27.5	29.5	31.5	33.5	35.5	38.0	40.5	43.0	46.0
13.2	14.2	15.2	16.2	17.7	19.2	20.7	22.2	23.7	25.2	26.7	28.7	30.7	32.7	34.7	37.2	39.7	42.2	45.2
14.2	15.2	16.2	17.2	18.7	20.2	21.7	23.2	24.7	26.2	27.7	29.7	31.7	33.7	35.7	38.2	40.7	43.2	46.2
12.8	13.8	14.8	15.8	17.3	18.8	20.3	21.8	23.3	24.8	26.3	28.3	30.3	32.3	34.3	36.8	39.3	41.8	44.8
13.0	14.0	15.0	16.0	17.5	19.0	20.5	22.0	23.5	25.0	26.5	28.5	30.5	32.5	34.5	37.0	39.5	42.0	45.0
12.5	13.5	14.5	15.5	17.0	18.5	20.0	21.5	23.0	24.5	26.0	28.0	30.0	32.0	34.0	36.5	39.0	41.5	44.5
11.0	12.0	13.0	14.0	15.5	17.0	18.5	20.0	21.5	23.0	24.5	26.5	28.5	30.5	32.5	35.0	37.5	40.0	43.0
13.7	14.7	15.7	16.7	18.2	19.7	21.2	22.7	24.2	25.7	27.2	29.2	31.2	33.2	35.2	37.7	40.2	42.7	45.7
13.5	14.5	15.5	16.5	18.0	19.5	21.0	22.5	24.0	25.5	27.0	29.0	31.0	33.0	35.0	37.5	40.0	42.5	45.5
13.3	14.3	15.3	16.3	17.8	19.3	20.8	22.3	23.8	25.3	26.8	28.8	30.8	32.8	34.8	37.3	39.8	42.3	45.3
13.9	14.9	15.9	16.9	18.4	19.9	21.4	22.9	24.4	25.9	27.4	29.4	31.4	33.4	35.4	37.9	40.4	42.9	45.9
14.1	15.1	16.1	17.1	18.6	20.1	21.6	23.1	24.6	26.1	27.6	29.6	31.6	33.6	35.6	38.1	40.6	43.1	46.1
12.9	13.9	14.9	15.9	17.4	18.9	20.4	21.9	23.4	24.9	26.4	28.4	30.4	32.4	34.4	36.9	39.4	41.9	44.9
13.1	14.1	15.1	16.1	17.6	19.1	20.6	22.1	23.6	25.1	26.6	28.6	30.6	32.6	34.6	37.1	39.6	42.1	45.1
12.6	13.6	14.6	15.6	17.1	18.6	20.1	21.6	23.1	24.6	26.1	28.1	30.1	32.1	34.1	36.6	39.1	41.6	44.6
11.1	12.1	13.1	14.1	15.6	17.1	18.6	20.1	21.6	23.1	24.6	26.6	28.6	30.6	32.6	35.1	37.6	40.1	43.1
13.8	14.8	15.8	16.8	18.3	19.8	21.3	22.8	24.3	25.8	27.3	29.3	31.3	33.3	35.3	37.8	40.3	42.8	45.8
13.6	14.6	15.6	16.6	18.1	19.6	21.1	22.6	24.1	25.6	27.1	29.1	31.1	33.1	35.1	37.6	40.1	42.6	45.6
13.4	14.4	15.4	16.4	17.9	19.4	20.9	22.4	23.9	25.4	26.9	28.9	30.9	32.9	34.9	37.4	39.9	42.4	45.4
14.0	15.0	16.0	17.0	18.5	20.0	21.5	23.0	24.5	26.0	27.5	29.5	31.5	33.5	35.5	38.0	40.5	43.0	46.0
13.1	14.1	15.1	16.1	17.6	19.1	20.6	22.1	23.6	25.1	26.6	28.6	30.6	32.6	34.6	37.1	39.6	42.1	45.2
12.9	13.9	14.9	15.9	17.4	18.9	20.4	21.9	23.5	25.0	26.5	28.5	30.5	32.5	34.5	37.0	39.5	42.0	45.0
12.7	13.7	14.7	15.7	17.2	18.7	20.2	21.7	23.2	24.7	26.2	28.2	30.2	32.2	34.2	36.7	39.2	41.7	44.7
11.2	12.2	13.2	14.2	15.7	17.2	18.8	20.3	21.8	23.3	24.8	26.8	28.8	30.8	32.8	35.3	37.8	40.3	43.3
13.5	14.5	15.5	16.5	18.0	19.5	21.0	22.5	24.0	25.5	27.0	29.0	31.0	33.0	35.0	37.5	40.0	42.5	45.5
13.7	14.7	15.7	16.7	18.2	19.7	21.2	22.7	24.2	25.7	27.2	29.2	31.2	33.2	35.2	37.7	40.2	42.7	45.7
13.0	14.0	15.0	16.0	17.5	19.0	20.5	22.0	23.5	25.0	26.5	28.5	30.5	32.5	34.5	37.0	39.5	42.0	45.0
13.9	14.9	15.9	16.9	18.4	19.9	21.4	22.9	24.4	25.9	27.4	29.4	31.4	33.4	35.4	37.9	40.4	42.9	45.9
13.2	14.2	15.2	16.2	17.7	19.2	20.7	22.2	23.7	25.2	26.7	28.7	30.7	32.7	34.7	37.2	39.7	42.2	45.2
12.8	13.8	14.8	15.8	17.3	18.8	20.3	21.8	23.3	24.8	26.3	28.3	30.3	32.3	34.3	36.8	39.3	41.8	44.8
11.3	12.4	13.4	14.4	15.9	17.4	18.9	20.4	21.9	23.4	24.9	26.9	28.9	30.9	32.9	35.4	37.9	40.4	43.4
13.5	14.5	15.5	16.5	18.0	19.5	21.0	22.5	24.0	25.5	27.0	29.0	31.0	33.0	35.0	37.85	40.0	42.5	45.5
13.1	14.1	15.1	16.1	17.6	19.1	20.6	22.1	23.6	25.1	26.6	28.6	30.6	32.6	34.6	37.1	39.6	42.1	45.1
13.3	14.3	15.3	16.3	17.8	19.3	20.8	22.3	23.8	25.3	26.8	28.8	30.8	32.8	34.8	37.3	39.8	42.3	45.3
12.9	13.9	14.9	15.9	17.4	18.9	20.4	21.9	23.4	24.9	26.4	28.4	30.4	32.4	34.4	36.9	39.4	41.9	44.9
13.7	14.7	15.7	16.7	18.2	19.7	21.2	22.7	24.2	25.7	27.2	29.2	31.2	33.2	35.2	37.7	40.2	42.7	45.7
	8.0	9.0	10.0	11.6	13.1	14.6	16.1	17.6	19.1	20.6	22.6	24.6	26.6	28.6	31.1	33.6	36.1	39.1
9.6	10.6	11.6	12.6	14.1	15.6	17.1	18.0	20.1	21.6	23.1	25.1	27.1	29.1	31.1	33.6	36.1	38.6	41.6
11.5	12.5	13.5	14.5	16.0	17.5	19.0	20.5	22.0	23.5	25.0	27.0	29.0	31.0	33.0	35.5	38.0	40.5	43.5
13.2	14.2	15.2	16.2	17.7	19.2	20.7	22.2	23.7	25.2	26.7	28.7	30.7	32.7	34.7	37.2	39.7	42.2	45.2
12.9	13.9	14.9	15.9	17.4	18.9	20.4	21.9	23.4	24.9	26.4	28.4	30.4	32.4	34.4	36.9	39.4	42.0	45.0
13.6	14.6	15.6	16.6	18.1	19.6	21.1	22.6	24.1	25.6	27.1	29.1	31.1	33.1	35.1	37.6	40.1	42.6	45.6
13.4	14.4	15.4	16.4	17.9	19.4	20.9	22.4	23.9	25.4	26.9	28.9	30.9	32.9	34.9	37.4	39.9	42.4	45.4
9.7	10.7	11.7	12.7	14.2	15.8	17.3	18.8	20.3	21.8	23.3	25.3	27.3	29.3	31.3	33.8	36.3	38.8	41.8
11.6	12.6	13.6	14.6	16.1	17.6	19.1	20.6	22.1	23.6	25.1	27.1	29.1	31.1	33.1	35.6	38.1	40.6	43.6
13.2	14.3	15.3	16.3	17.8	19.3	20.8	22.3	23.8	25.3	26.8	28.8	30.8	32.8	34.8	37.3	39.8	42.3	45.3
13.0	14.0	15.0	16.0	17.5	19.0	20.5	22.0	23.5	25.0	26.5	28.5	30.5	32.5	34.5	37.0	39.5	42.0	45.0
13.4	14.4	15.4	16.5	18.0	19.5	21.0	22.5	24.0	25.5	27.0	29.0	31.0	33.0	35.0	37.5	40.0	42.5	45.5
9.8	10.8	11.8	12.8	14.4	15.9	17.4	18.9	20.4	21.9	23.4	25.4	27.4	29.4	31.4	33.9	36.4	38.9	41.9
11.7	12.7	13.7	14.7	16.2	17.7	19.2	20.7	22.2	23.7	25.2	27.2	29.2	31.2	33.2	35.7	38.2	40.7	43.7
13.1	14.1	15.1	16.1	17.6	19.1	20.6	22.1	23.6	25.1	26.6	28.6	30.6	32.6	34.6	37.1	39.6	42.1	45.1
13.3	14.3	15.3	16.3	17.8	19.3	20.8	22.3	23.8	25.3	26.8	28.8	30.8	32.8	34.8	37.3	39.8	42.3	45.3
11.7	12.7	13.8	14.8	16.3	17.8	19.3	20.8	22.3	23.8	25.3	27.3	29.3	31.3	33.3	35.8	38.3	40.8	43.8
10.0	11.0	12.0	13.0	14.5	16.0	17.5	19.0	20.5	22.0	23.5	25.5	27.5	29.5	31.6	34.1	36.6	39.1	42.1
13.2	14.2	15.2	16.2	17.7	19.2	20.7	22.2	23.7	25.2	26.7	28.7	30.7	32.7	34.7	37.2	39.7	42.2	45.2
11.8	12.8	13.8	14.8	16.3	17.9	19.4	20.9	22.4	23.9	25.4	27.4	29.4	31.4	33.4	35.9	38.4	40.9	43.9
10.1	11.1	12.1	13.1	14.6	16.1	17.6	19.1	20.6	22.1	23.7	25.7	27.7	29.7	31.7	34.2	36.7	39.2	42.2
				9.1	10.7	12.3	13.8	15.3	16.9	18.4	20.4	22.4	24.5	26.5	29.0	31.5	34.0	37.0
11.9	12.9	13.9	14.9	16.4	17.9	19.4	20.9	22.4	23.9	25.4	27.4	29.4	31.4	33.5	36.0	38.5	41.0	44.0
7.7	8.8	9.8	10.8	12.4	13.9	15.4	16.9	18.4	20.0	21.5	23.5	25.5	27.5	29.5	32.0	34.5	37.0	40.0
10.2	11.2	12.2	13.2	14.7	16.2	17.7	19.2	20.8	22.3	23.8	25.8	27.8	29.8	31.8	34.3	36.8	39.3	42.3
12.0	13.0	14.0	15.0	16.5	18.0	19.5	21.0	22.5	24.0	25.5	27.5	29.5	31.5	33.5	36.0	38.5	41.0	44.0
10.3	11.3	12.3	13.3	14.8	16.3	17.8	19.4	20.9	22.4	23.9	25.9	27.9	29.9	31.9	34.4	36.9	39.4	42.4
7.9	8.9	10.0	11.0	12.5	14.0	15.6	17.1	18.6	20.1	21.6	23.6	25.6	27.6	29.6	32.2	34.7	37.2	40.2
12.1	13.1	14.1	15.1	16.6	18.1	19.6	21.1	22.6	24.1	25.6	27.6	29.6	31.6	33.6	36.1	38.6	41.1	44.1
8.0	9.0	10.1	11.1	12.6	14.1	15.7	17.2	18.7	20.2	21.7	23.7	25.7	27.8	29.8	32.3	34.8	37.3	40.3
10.4	11.4	12.4	13.4	14.9	16.4	17.9	19.4	20.9	22.5	24.0	26.0	28.0	30.0	32.0	34.5	37.0	39.5	42.5
12.1	13.1	14.1	15.1	16.6	18.2	19.7	21.2	22.7	24.2	25.7	27.7	29.7	31.7	33.7	36.2	38.7	41.2	44.2
10.4	11.5	12.5	13.5	15.0	16.5	18.0	19.5	21.0	22.5	24.0	26.1	28.1	30.1	32.1	34.6	37.1	39.6	42.6
.90			1.00							1.08				1.15				

J DRIVE SELECTION TABLES

	SHEAVES Outside Diameters		DRIVEN RPM AND HORSEPOWER PER RIB						How to specify SHEAVE PART NUMBER For example: Sheave 6J25 6 (Grooves) J (Section) 2.50 (2.50" O.D.)	How to specify BELT PART NUMBER For example: Belt 550J6 550 (55.0" Nom E.L.) J (Section) 6 (Ribs)							
Speed Ratio	DriveR	DriveN	1160 RPM DriveR		1750 RPM DriveR		3450 RPM DriveR		NOMINAL BELT STANDARD EFF. LENGTHS - INCHES STOCK SIZES - 4, 6, 10 AND 16 RIB WIDTH								
			RPM	HP	RPM	HP	RPM	HP	18.0	19.0	20.0	22.0	24.0	26.0	28.0	30.0	32.0
									NOMINAL CENTER DISTANCE - INCHES								
2.86	2.80	8.00	405	0.32	611	0.45	1206	0.81									7.0
3.00	1.50	4.50	386	0.14	583	0.20	1150	0.35		4.5	5.1	6.1	7.1	8.2	9.2	10.2	11.2
3.00	2.00	6.00	386	0.21	583	0.30	1150	0.53					5.3	6.4	7.5	8.5	9.5
3.02	2.65	8.00	384	0.30	579	0.43	1142	0.76									7.1
3.16	1.90	6.00	367	0.20	553	0.28	1091	0.50					5.4	6.5	7.5	8.6	9.6
3.16	3.35	10.60	367	0.39	553	0.56	1091	0.99									
3.20	2.50	8.00	362	0.28	546	0.40	1078	0.71									7.2
3.33	1.80	6.00	348	0.18	525	0.26	1036	0.46					5.5	6.5	7.6	8.6	9.6
3.37	3.15	10.60	344	0.36	519	0.52	1023	0.93									
3.39	2.36	8.00	342	0.26	516	0.37	1017	0.66									7.3
3.53	1.70	6.00	328	0.17	495	0.24	977	0.42					5.5	6.6	7.7	8.7	9.7
3.53	3.00	10.60	328	0.34	495	0.49	977	0.88									
3.57	2.24	8.00	324	0.24	490	0.35	966	0.62								6.3	7.4
3.75	1.60	6.00	309	0.15	466	0.22	920	0.39					5.6	6.7	7.7	8.8	9.8
3.77	2.12	8.00	307	0.23	464	0.32	915	0.57								6.4	7.5
3.79	2.80	10.60	306	0.32	461	0.45	910	0.81									
4.00	1.50	6.00	190	0.14	437	0.20	862	0.35					5.7	6.7	7.8	8.8	9.9
4.00	2.00	8.00	290	0.21	437	0.30	862	0.53								6.5	7.6
4.00	2.65	10.60	290	0.30	437	0.43	862	0.76									
4.21	1.90	8.00	175	0.20	415	0.28	819	0.50								6.5	7.6
4.24	2.50	10.60	273	0.28	412	0.40	813	0.71									
4.44	1.80	8.00	261	0.18	394	0.26	777	0.46								6.6	7.7
4.49	2.36	10.60	258	0.26	389	0.37	768	0.66									
4.71	1.70	8.00	246	0.17	371	0.24	732	0.42								6.6	7.7
4.73	2.24	10.60	245	0.24	370	0.35	729	0.62									
5.00	1.60	8.00	232	0.15	350	0.22	690	0.39								6.7	7.8
5.00	2.12	10.60	232	0.23	350	0.32	690	0.57									
5.30	2.00	10.60	218	0.21	330	0.30	650	0.53									
5.33	1.50	8.00	217	0.14	328	0.20	647	0.35								6.8	7.9
5.58	1.90	10.60	207	0.20	313	0.28	618	0.50									
5.89	1.80	10.60	196	0.18	297	0.26	585	0.46									
6.24	1.70	10.60	185	0.17	280	0.24	552	0.42									
6.63	1.60	10.60	174	0.15	263	0.22	520	0.39									
7.07	1.50	10.60	164	0.14	247	0.20	488	0.35									
ARC LENGTH FACTOR →																	

QUARTER-TURN Vee-Rib DRIVES (without Idler)

Open Quarter Turn Vee-Rib drives or Quarter-Turn Vee-Rib drives without reverse bend idler are NOT reversible. Open Quarter-Turn drives require considerably longer centers than those which use a reverse bend idler.

The Minimum Center Distance for these drives is equal to 13 x d (where d is the small sheave diameter) OR 5.5 (D - 1.5W) (where D is the large sheave diameter and W is the belt width). Select the center distance from these two that is the larger.

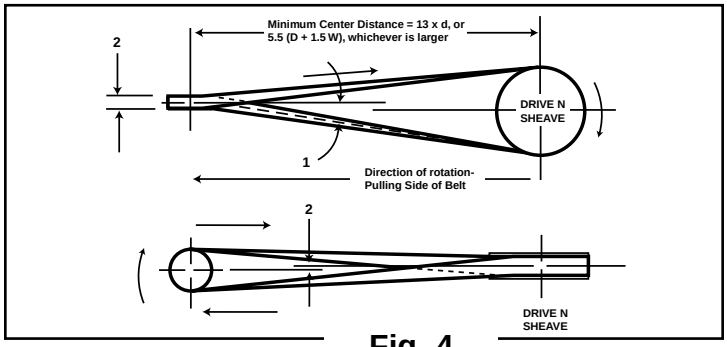

Fig. 4

It is important that the sheaves be aligned so that the belt always enters any sheave at right angle to the sheave face (within 2˚).

1. Belt center line to enter driveR sheave at 2˚ or less away from 90˚ or 7⁄16" per foot away from being square (90˚) with driveR.

2. Face center of driveN sheave in same plane or slightly higher than center of driveR sheave. Adjust belt tension running full load to remove slack side excess sag.

QUARTER-TURN Vee-Rib DRIVES (with Idler)

Large speed ratios with relatively short center distances can be obtained by using a flat outside guide idler. The advantage of using an idler is that it removes the limitations of the speed ratio. For all Vee-Rib Angle drives the belt width must be determined in the manner as shown on page 166 for calculating Vee-Rib drives. This includes using the Service Factor (page 168) and the standard belt pitch lengths (page 219). The minimum overall center to center distance for Quarter-Turn drives with idlers is equal to 22⁄2 x W (where W is the belt width).

Care must be taken so that this idler is placed on the slack side of the belt near to where the belt leaves the driveR sheave. Be an additional provision of adjusting the angular position of this idler the drive can also be made reversible.

J SPEED RATIO RANGE 2.86 - 7.07

Drive Grooves. 4 6 10 16
Drive Belt Width. . . . . 0.37" 0.55" 0.92" 1.47"
Drive Diameter. . . . . See page 194 for stock sheaves.

NOMINAL BELT STANDARD EFF. LENGTHS - INCHES																		
34.0	36.0	38.0	40.0	43.0	46.0	49.0	52.0	55.0	58.0	61.0	65.0	69.0	73.0	77.0	82.0	87.0	92.0	98.0
NOMINAL CENTER DISTANCES - INCHES																		
8.1	9.2	10.2	11.2	12.8	14.3	15.8	17.3	18.8	20.4	21.9	23.9	25.9	27.9	29.9	32.4	34.9	37.4	40.4
12.2	13.2	14.2	15.2	16.7	18.2	19.7	21.2	22.7	24.2	25.7	27.7	29.8	31.8	33.8	36.3	38.8	41.3	44.3
10.5	11.5	12.6	13.6	15.1	16.6	18.1	19.6	21.1	22.6	24.1	26.1	28.1	30.2	32.2	34.7	37.2	39.7	42.7
8.2	9.3	10.3	11.3	12.9	14.4	15.9	17.4	19.0	20.5	22.0	24.0	26.0	28.0	30.0	32.5	35.0	37.5	40.6
10.6	11.6	12.6	13.6	15.2	16.7	18.2	19.7	21.2	22.7	24.2	26.2	28.2	30.2	32.2	34.7	37.2	39.7	42.7
			8.3	9.9	11.5	13.0	14.6	16.1	17.7	19.2	21.2	23.3	25.3	27.3	29.8	32.3	34.9	37.9
8.3	9.4	10.4	11.4	13.0	14.5	16.0	17.5	19.1	20.6	22.1	24.1	26.1	28.1	30.1	32.6	35.1	37.7	40.7
10.7	11.7	12.7	13.7	15.2	16.7	18.3	19.8	21.3	22.8	24.3	26.3	28.3	30.3	32.3	34.8	37.3	39.8	42.8
			8.4	10.0	11.6	13.2	14.7	16.3	17.8	19.3	21.4	23.4	25.4	27.5	30.0	32.5	35.0	38.0
8.4	9.4	10.5	11.5	13.1	14.6	16.1	17.6	19.2	20.7	22.2	24.2	26.2	28.2	30.2	32.7	35.3	37.8	40.8
10.7	11.8	12.8	13.8	15.3	16.8	18.3	19.8	21.3	22.9	24.4	26.4	28.4	30.4	32.4	34.9	37.4	39.9	42.9
			8.5	10.1	11.7	13.3	14.8	16.4	17.9	19.5	21.5	23.5	25.5	27.6	30.1	32.6	35.1	38.1
8.5	9.5	10.6	11.6	13.1	14.7	16.2	17.7	19.2	20.8	22.3	24.3	26.3	28.3	30.3	32.8	35.3	37.9	40.9
10.8	11.8	12.8	13.9	15.4	16.9	18.4	19.9	21.4	22.9	24.4	26.4	28.4	30.5	32.5	35.0	37.5	40.0	43.0
8.6	9.6	10.6	11.7	13.2	14.8	16.3	17.8	19.3	20.8	22.4	24.4	26.4	28.4	30.4	32.9	35.4	37.9	41.0
			8.6	10.2	11.8	13.4	15.0	16.5	18.1	19.6	21.6	23.7	25.7	27.7	30.2	32.7	35.3	38.3
10.9	11.9	12.9	13.9	15.4	17.0	18.5	20.0	21.5	23.0	24.5	26.5	28.5	30.5	32.5	35.0	37.5	40.0	43.1
8.6	9.7	10.7	11.8	13.3	14.8	16.4	17.9	19.4	20.9	22.4	24.5	26.5	28.5	30.5	33.0	35.5	38.0	41.0
			8.7	10.3	11.9	13.5	15.1	16.6	18.2	19.7	21.7	23.8	25.8	27.8	30.3	32.9	35.4	38.4
8.7	9.8	10.8	11.8	13.4	14.9	16.4	18.0	19.5	21.0	22.5	24.5	26.6	28.6	30.6	33.1	35.6	38.1	41.1
			8.8	10.4	12.0	13.6	15.2	16.7	18.3	19.8	21.8	23.9	25.9	27.9	30.4	33.0	35.5	38.5
8.8	9.8	10.9	11.9	13.4	15.0	16.5	18.0	19.6	21.1	22.6	24.6	26.6	28.6	30.7	33.2	35.7	38.2	41.2
		7.7	8.9	10.5	12.1	13.7	15.3	16.8	18.4	19.9	21.9	24.0	26.0	28.0	30.5	33.1	35.6	38.6
8.8	9.9	10.9	12.0	13.5	15.1	16.6	18.1	19.6	21.2	22.7	24.7	26.7	28.7	30.7	33.2	35.7	38.3	41.3
		7.8	8.9	10.6	12.2	13.8	15.4	16.9	18.4	20.0	22.0	24.1	26.1	28.1	30.6	33.2	35.7	38.7
8.9	9.9	11.0	12.0	13.6	15.1	16.7	18.2	19.	721.2	22.7	24.8	26.8	28.8	30.8	33.3	35.8	38.3	41.3
		7.9	9.0	10.7	12.3	13.9	15.4	17.0	18.5	20.1	22.1	24.1	26.2	28.2	30.7	33.2	35.8	38.8
		7.9	9.1	10.7	12.4	13.9	15.5	17.1	18.6	20.2	22.2	24.2	26.3	28.3	30.8	33.3	35.9	38.9
9.0	10.0	11.1	12.1	13.7	15.2	16.7	18.3	19.8	21.3	22.8	24.8	26.8	28.9	30.9	33.4	35.9	38.4	41.4
		8.0	9.2	10.8	12.4	14.0	15.6	17.1	18.7	20.2	22.3	24.3	26.3	28.4	30.9	33.4	35.9	38.9
		8.1	9.2	10.9	12.5	14.1	15.6	17.2	18.7	20.3	22.3	24.4	26.4	28.4	31.0	33.5	36.0	39.0
		8.1	9.3	10.9	12.6	14.1	15.7	17.3	18.8	20.4	22.4	24.4	26.5	28.5	31.0	33.5	36.1	39.1
		8.2	9.3	11.0	12.6	14.2	15.8	17.3	18.9	20.4	22.5	24.5	26.5	28.6	31.1	33.6	36.1	39.2
		8.2	9.4	11.1	12.7	14.3	15.8	17.4	19.0	20.5	22.5	24.6	26.6	28.6	31.2	33.7	36.2	39.2
	.80				.90					1.00						1.08		1.15

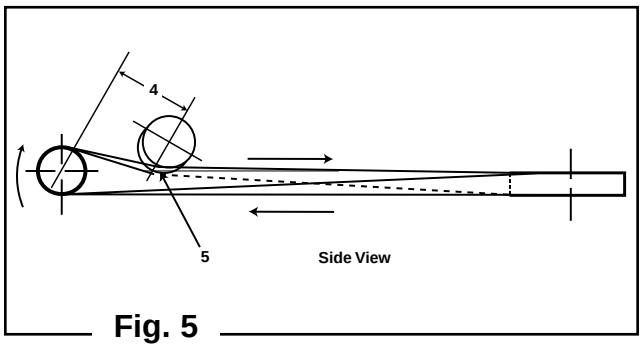

Fig. 5

NOTE: *The most critical item in any angle drive is to be sure that the belt always enters at right angles to any sheave face (within 2˚).*

2. Center line of belt entering idler.
3. Center line of pulled side of belt to make 90˚ with driveR shaft.
4. Length of belt between driveR and idler.

for Vee-Rib "J" = 4W + 1″
"L" = 4W + 2″
"M" = 4W + 3″

where W = belt width in inches

5. Point at which center line of belt enters face center of idler to be level with or slightly higher than the top side of driveN sheave.

1. Idler-inclined $\left(112 \times \frac{\text{Horizontal Sheave Dia.}}{\text{Overall Center Distance}}\right)$ degrees to floor level. For non-reversible operation rotate and set idler base so entering belt center line is square with and centered with the idler face. Where drive may reverse on stopping, an anti-rotation device may be used to prevent the belt from jumping off the sheave in reverse direction of travel. To make the drive reversible, an idler adjustable in height and angle must be provided and located by trial of height and angle so that the center line of the belt both enters and leaves the idler square with the idler face.

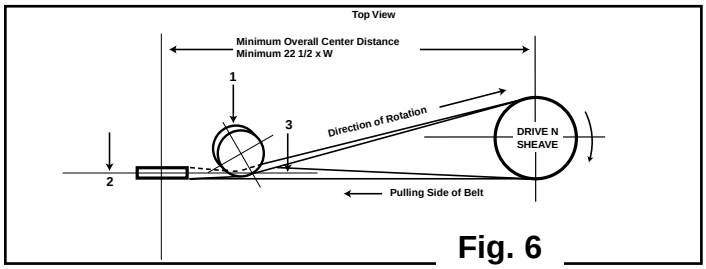

Fig. 6

Use flat faced idler 50% wider than the belt.
Minimum OD = 1½″ for Vee-Rib "J"
Minimum OD = 8″ for Vee-Rib "L"
Minimum OD = 15″ for Vee-Rib "M"

L DRIVE SELECTION TABLES

	SHEAVES Outside Diameters		DRIVEN RPM AND HORSEPOWER PER RIB						How to specify SHEAVE PART NUMBER For Example: Sheave 16L46 16 (Grooves) L (Section) 46 (4.6" O.D.)							How to specify BELT PART NUMBER For example: Belt 1120L16 1120 (112.0" Nom. E.L.) L (Section) 16 (Ribs)					
Speed Ratio			1160 RPM DriveR		1750 RPM DriveR		3450 RPM DriveR		NOMINAL (STOCK & NON-STOCK) BELT EFF. LENGTHS - INCHES													
									50.0	54.0	56.0	61.5	63.5	65.5	67.5	69.5	72.5	76.5	78.0	79.5	81.5
									NOMINAL CENTER DISTANCE - INCHES												
1.00	3.00	3.00	1160	0.83	1750	1.12	3450	1.75	20.3	22.3	23.3	26.0	27.0	28.0	29.0	30.0	31.5	33.5	34.2	35.0	36.0
1.00	3.20	3.20	1160	0.95	1750	1.30	3450	2.07	20.0	22.0	23.0	25.7	26.7	27.7	28.7	29.7	31.2	33.2	34.0	34.7	35.7
1.00	3.40	3.40	1160	1.08	1750	1.48	3450	2.38	19.7	21.7	22.7	25.4	26.4	27.4	28.4	29.4	30.9	32.9	33.7	34.4	35.4
1.00	3.60	3.60	1160	12.20	1750	1.66	3450	2.69	19.3	21.3	22.3	25.1	26.1	27.1	28.1	29.1	30.6	32.6	33.3	34.1	35.1
1.00	3.80	3.80	1160	1.33	1750	1.84	3450	3.00	19.0	21.0	22.0	24.8	25.8	26.8	27.8	28.8	30.3	32.3	33.0	33.8	34.8
1.00	4.00	4.00	1160	1.45	1750	2.02	3450	3.29	18.7	20.7	21.7	24.5	25.5	26.5	27.5	28.5	30.0	32.0	32.7	33.5	34.5
1.00	4.20	4.20	1160	1.57	1750	2.19	3450	3.59	18.4	20.4	21.4	24.2	25.2	26.2	27.2	28.2	29.7	31.7	32.4	33.2	34.2
1.00	4.40	4.40	1160	1.70	1750	2.36	3450	3.87	18.1	20.1	21.1	23.8	24.8	25.8	26.8	27.8	29.3	31.3	32.1	32.8	33.8
1.00	4.60	4.60	1160	1.82	1750	2.54	3450	4.15	17.8	19.8	20.8	23.5	24.5	25.5	26.5	27.5	29.0	31.0	31.8	32.5	33.5
1.00	4.80	4.80	1160	1.94	1750	2.71	3450	4.43	17.5	19.5	20.5	23.2	24.2	25.2	26.2	27.2	28.7	30.7	31.5	32.2	33.2
1.00	5.00	5.00	1160	2.06	1750	2.88	3450	4.70	17.1	19.1	20.1	22.9	23.9	24.9	25.9	26.9	28.4	30.4	31.1	31.9	32.9
1.00	5.20	5.20	1160	2.18	1750	3.05	3450	4.96	16.8	18.8	19.8	22.6	23.6	24.6	25.6	26.6	28.1	30.1	30.8	31.6	32.6
1.00	5.40	5.40	1160	2.30	1750	3.21	3450	5.21	16.5	18.5	19.5	22.3	23.3	24.3	25.3	26.3	27.8	29.8	30.5	31.3	32.3
1.00	5.60	5.60	1160	2.41	1750	3.38	3450	5.46	16.2	18.2	19.2	22.0	23.0	24.0	25.0	26.0	27.5	29.5	30.2	31.0	32.0
1.00	5.80	5.80	1160	2.53	1750	3.54	3450	5.70	15.9	17.9	18.9	21.6	22.6	23.6	24.6	25.6	27.1	29.1	29.9	30.6	31.6
1.00	6.00	6.00	1160	2.65	1750	3.71	3450	5.94	15.6	17.6	18.6	21.3	22.3	23.3	24.3	25.3	26.8	28.8	29.6	30.3	31.3
1.00	6.20	6.20	1160	2.76	1750	3.87	3450	6.17	15.3	17.3	18.3	21.0	22.0	23.0	24.0	25.0	26.5	28.5	29.3	30.0	31.0
1.00	6.40	6.40	1160	2.88	1750	4.03	3450	6.39	15.0	17.0	18.0	20.7	21.7	22.7	23.7	24.7	26.2	28.2	29.0	29.7	30.7
1.00	7.00	7.00	1160	3.22	1750	4.51	3450	7.01	14.0	16.0	17.0	19.8	20.8	21.8	22.8	23.8	25.3	27.3	28.0	28.8	29.8
1.00	7.40	7.40	1160	3.45	1750	4.80			13.4	15.4	16.4	19.1	20.1	21.1	22.1	23.1	24.6	26.6	27.4	28.1	29.1
1.00	8.00	8.00	1160	3.79	1750	5.27			12.4	14.4	15.4	18.2	19.2	20.2	21.2	22.2	23.7	25.7	26.4	27.2	28.2
1.00	9.00	9.00	1160	4.33	1750	6.00			10.9	12.9	13.9	16.6	17.6	18.6	19.6	20.6	22.1	24.1	24.9	25.6	26.6
1.00	10.00	10.00	1160	4.87	1750	6.68				11.3	12.3	15.1	16.0	17.0	18.0	19.0	20.5	22.5	23.3	24.0	25.0
1.03	5.80	6.00	1126	2.55	1699	3.57	3349	5.76	15.7	17.7	18.7	21.5	22.5	23.5	24.5	25.5	27.0	29.0	29.7	30.5	31.5
1.03	6.00	6.20	1126	2.67	1699	3.74	3349	6.00	15.4	17.4	18.4	21.2	22.2	23.2	24.2	25.2	26.7	28.7	29.4	30.2	31.2
1.03	6.20	6.40	1126	2.78	1699	3.90	3349	6.22	15.1	17.1	18.1	20.9	21.9	22.9	23.9	24.9	26.4	28.4	29.1	29.9	30.9
1.04	4.60	4.80	1115	1.84	1682	2.57	3317	4.22	17.6	19.6	20.6	23.4	24.4	25.4	26.4	27.4	28.9	30.9	31.6	32.4	33.4
1.04	4.80	5.00	1115	1.96	1682	2.74	3317	4.50	17.3	19.3	20.3	23.1	24.1	25.1	26.1	27.1	28.6	30.6	31.3	32.1	33.1
1.04	5.00	5.20	1115	2.08	1682	2.91	3317	4.77	17.0	19.0	20.0	22.7	23.7	24.7	25.7	26.7	28.2	30.2	31.0	31.7	32.7
1.04	5.20	5.40	1115	2.20	1682	3.08	3317	5.03	16.7	18.7	19.7	22.4	23.4	24.4	25.4	26.4	27.9	29.9	30.7	31.4	32.4
1.04	5.40	5.60	1115	2.32	1682	3.25	3317	5.28	16.4	18.4	19.4	22.1	23.1	24.1	25.1	26.1	27.6	29.6	30.4	31.1	32.1
1.04	5.80	5.80	1115	2.44	1682	3.42	3317	5.53	16.1	18.1	19.1	21.8	22.8	23.8	24.8	25.8	27.3	29.3	30.1	30.8	31.8
1.05	3.80	4.00	1104	1.36	1666	1.88	3285	3.08	18.9	20.9	21.9	24.6	25.6	26.6	27.6	28.6	30.1	32.1	32.9	33.6	34.6
1.05	4.00	4.20	1104	1.48	1666	2.06	3285	3.38	18.6	20.6	21.6	24.3	25.3	26.3	27.3	28.3	29.8	31.8	32.6	33.3	34.3
1.05	4.20	4.40	1104	1.60	1666	2.23	3285	3.67	18.2	20.2	21.2	24.0	25.0	26.0	27.0	28.0	29.5	31.5	32.2	33.0	34.0
1.05	4.40	4.60	1104	1.72	1666	2.41	3285	3.96	17.9	19.9	20.9	23.7	24.7	25.7	26.7	27.7	29.2	31.2	31.9	32.7	33.7
1.06	3.20	3.40	1094	0.99	1650	1.35	3254	2.17	19.8	21.8	22.8	25.6	26.6	27.6	28.6	29.6	31.1	33.1	33.8	34.6	35.6
1.06	3.40	3.60	1094	1.11	1650	1.53	3254	2.49	19.5	21.5	22.5	25.3	26.3	27.3	28.3	29.3	30.8	32.8	33.5	34.3	35.3
1.06	3.60	3.80	1094	1.24	1650	1.71	3254	2.80	19.2	21.2	22.2	24.9	25.9	26.9	27.9	28.9	30.4	32.4	33.2	33.9	34.9
1.06	7.00	7.40	1094	3.26	1650	4.56	3254	7.11	13.7	15.7	16.7	19.4	20.4	21.4	22.4	23.4	24.9	26.9	27.7	28.4	29.4
1.07	3.00	3.20	1084	0.87	1635	1.18	3224	1.87	20.1	22.1	23.1	25.9	26.9	27.9	28.9	29.9	31.4	33.4	34.1	34.9	35.9
1.07	5.40	5.80	1.084	2.34	1635	3.27	3224	5.33	16.2	18.2	19.2	22.0	23.0	24.0	25.0	26.0	27.5	29.5	30.2	31.0	32.0
1.07	5.60	6.00	1084	2.45	1635	3.44	3224	5.58	15.9	17.9	18.9	21.6	22.6	23.6	24.6	25.6	27.1	29.1	29.9	30.6	31.6
1.07	5.80	6.20	1084	2.57	1635	3.60	3224	5.82	15.6	17.6	18.6	21.3	22.3	23.3	24.3	25.3	26.8	28.8	29.6	30.3	31.3
1.07	6.00	6.40	1084	2.69	1635	3.77	3224	6.06	15.3	17.3	18.3	21.0	22.0	23.0	24.0	25.0	26.5	28.5	29.3	30.0	31.0
1.08	4.80	5.20	1074	1.98	1620	2.77	3194	4.56	17.1	19.1	20.1	22.9	23.9	24.9	25.9	26.9	28.4	30.4	31.1	31.9	32.9
1.08	5.00	5.40	1074	2.10	1620	2.94	3194	4.83	16.8	18.8	19.8	22.6	23.6	24.6	25.6	26.6	28.1	30.1	30.8	31.6	32.6
1.08	5.20	5.60	1074	2.22	1020	3.11	3194	5.09	16.5	18.5	19.5	22.3	23.3	24.3	25.3	26.3	27.8	29.8	30.5	31.3	32.3
1.08	7.40	8.00	1074	3.50	1620	4.88			12.9	14.9	15.9	18.7	19.7	20.7	21.7	22.7	24.2	26.2	26.9	27.7	28.7
1.09	4.40	4.80	1064	1.74	1605	2.44	3165	4.02	17.8	19.8	20.8	23.5	24.5	25.5	26.5	27.5	29.0	31.0	31.8	32.5	33.5
1.09	4.60	5.00	1064	1.87	1605	2.61	3165	4.30	17.5	19.5	20.5	23.2	24.2	25.2	26.2	27.2	28.7	30.7	31.5	32.2	33.2
1.09	6.40	7.00	1064	2.93	1605	4.10	3165	6.53	14.5	16.5	17.5	20.2	21.2	22.2	23.2	24.2	25.7	27.7	28.5	29.2	30.2
1.10	4.00	4.40	1054	1.50	1590	2.10	3136	3.45	18.4	20.4	21.4	24.2	25.2	26.2	27.2	28.2	29.7	31.7	32.4	33.2	34.2
1.10	4.20	4.60	1054	1.63	1590	2.27	3136	3.74	18.1	20.1	21.1	23.8	24.8	25.8	26.8	27.8	29.3	31.3	32.1	32.8	33.8
1.10	5.80	6.40	1054	2.58	1590	3.62	3136	5.86	15.4	17.4	18.4	21.2	22.2	23.2	24.2	25.2	26.7	28.7	29.4	30.2	31.2
1.11	3.60	4.00	1045	1.26	1576	1.75	3108	2.86	19.0	21.0	22.0	24.8	25.8	26.8	27.8	28.8	30.3	32.3	33.0	33.8	34.8
1.11	3.80	4.20	1045	1.38	1576	1.92	3108	3.17	18.7	20.7	21.7	24.5	25.5	26.5	27.5	28.5	30.0	32.0	32.7	33.5	34.5
1.11	5.40	6.00	1045	2.35	1576	3.30	3108	5.38	16.0	18.0	19.0	21.8	22.8	23.8	24.8	25.8	27.3	29.3	30.0	30.8	31.8
1.11	5.60	6.20	1045	2.47	1576	3.47	3108	5.63	15.7	17.7	18.7	21.5	22.5	23.5	24.5	25.5	27.0	29.0	29.7	30.5	31.5
1.11	9.00	10.00	1045	4.39	1576	6.08				12.1	13.1	15.8	16.8	17.8	18.8	19.8	21.3	23.3	24.1	24.8	25.8
1.12	3.40	3.80	1035	1.14	1562	1.57	3080	2.57	19.3	21.3	22.3	25.1	26.1	27.1	28.1	29.1	30.6	32.6	33.3	34.1	35.1
1.12	5.00	5.60	1035	2.12	1562	2.97	3080	4.88	16.7	18.7	19.7	22.4	23.4	24.4	25.4	26.4	27.9	29.9	30.7	31.4	32.4
1.12	5.20	5.80	1035	2.24	1562	3.14	3080	5.14	16.4	18.4	19.4	22.1	23.1	24.1	25.1	26.1	27.6	29.6	30.4	31.1	32.1
1.13	3.00	3.40	1026	0.89	1548	1.22	3053	1.94	20.0	22.0	23.0	25.7	26.7	27.7	28.7	29.7	31.2	33.2	34.0	34.7	35.7
1.13	3.20	3.60	1026	1.02	1548	1.40	3053	2.26	19.7	21.7	22.7	25.4	26.4	27.4	28.4	29.4	30.9	32.9	33.7	34.4	35.4
1.13	4.60	5.20	1026	1.88	1548	2.63	3053	4.34	17.3	19.3	20.3	23.1	24.1	25.1	26.1	27.1	28.6	30.6	31.3	32.1	33.1
1.13	4.80	5.40	1026	2.00	1548	2.81	3053	4.62	17.0	19.0	20.0	22.7	23.7	24.7	25.7	26.7	28.2	30.2	31.0	31.7	32.7
1.13	6.20	7.00	1026	2.83	1548	3.97	3053	6.36	14.6	16.6	17.6	20.4	21.4	22.4	23.4	24.4	25.9	27.9	28.6	29.4	30.4
1.13	8.00	9.00	1026	3.85	1548	5.37			11.6	13.6	14.6	17.4	18.4	19.4	20.4	21.4	22.9	24.9	25.7	26.4	27.4
1.14	4.20	4.80	1017	1.64	1535	2.29	3026	3.79	17.9	19.9	20.9	23.7	24.7	25.7	26.7	27.7	29.2	31.2	31.9	32.7	33.7
1.14	4.40	5.00	1017	1.76	1535	2.47	3026	4.07	17.6	19.6	20.6	23.4	24.4	25.4	26.4	27.4	28.9	30.9	31.6	32.4	33.4
1.14	5.60	6.40	1017	2.48	1535	3.48	3026	5.66	15.6	17.6	18.6	21.3	22.3	23.3	24.3	25.3	26.8	28.8	29.6	30.3	31.3
1.14	7.00	8.00	1017	3.29	1535	4.61	3026	7.21	13.2	15.2	16.2	19.0	20.0	21.0	22.0	23.0	24.5	26.5	27.2	28.0	29.0
1.15	4.00	4.60	1008	1.52	1521	2.12	3000	3.51	18.2	20.2	21.2	24.0	25.0	26.0	27.0	28.0	29.5	31.5	32.2	33.0	34.0
1.15	5.20	6.00	1008	2.25	1521	3.15	3000	5.17	16.2	18.2	19.2	22.0	23.0	24.0	25.0	26.0	27.5	29.5	30.2	31.0	32.0
1.15	5.40	6.20	1008	2.37	1521	3.32	3000	5.43	15.9	17.9	18.9	21.6	22.6	23.6	24.6	25.6	27.1	29.1	29.9	30.6	31.6
1.16	3.80	4.40	1000	1.40	1508	1.95	2974	3.22	18.6	20.6	21.6	24.3	25.3	26.3	27.3	28.3	29.8	31.8	32.6	33.3	34.3
1.16	5.00	5.80	1000	2.13	1508	2.99	2974	4.92	16.5	18.5	19.5	22.3	23.3	24.3	25.3	26.3	27.8	29.8	30.5	31.3	32.3
1.16	6.40	7.40	1000	2.96	1508	4.14	2974	6.61	14.2	16.2	17.2	19.9	20.9	21.9	22.9	23.9	25.4	27.4	28.2	28.9	29.9
1.17	3.60	4.20	991	1.28	1495	1.78	2948	2.92	18.9	20.9	21.9	24.6	25.6	26.6	27.6	28.6	30.1	32.1	32.9	33.6	34.6
ARC LENGTH FACTOR →									.90							1.00					

L SPEED RATIO RANGE 1.00 - 1.17

Drive Grooves	6	8	10	12	14	16	20
Drive Belt Width	1.11"	1.48"	1.85"	2.22"	2.59"	2.96"	3.70"
Drive Diameter	←	3.0" to 30.0"	→	←	5.4" to 30.0"	→	

NOMINAL (STOCK & NON-STOCK) BELT EFF. LENGTHS - INCHES																			
84.0	86.5	91.5	97.5	99.0	106.5	112.0	115.0	121.5	123.0	129.5	131.0	145.5	159.5 *	165.0 *	176.0 *	182.0 *	198.0 *	212.0 *	240.0 *
NOMINAL CENTER DISTANCES - INCHES																			
37.3	38.5	41.0	44.0	44.8	48.5	51.3	52.8	56.0	56.8	60.0	60.8	68.0	75.0	77.8	83.3	86.3	94.3	101.3	115.3
37.0	38.2	40.7	43.7	44.5	48.2	51.0	52.5	55.7	56.5	59.7	60.5	67.7	74.7	77.5	83.0	86.0	94.0	101.0	115.0
36.7	37.9	40.4	43.4	44.2	47.9	50.7	52.2	55.4	56.2	59.4	60.2	67.4	74.4	77.2	82.7	85.7	93.7	100.7	114.7
36.3	37.6	40.1	43.1	43.8	47.6	50.3	51.8	55.1	55.8	59.1	59.8	67.1	74.1	76.8	82.3	85.3	93.3	100.3	114.3
36.0	37.3	39.8	42.8	43.5	47.3	50.0	51.5	54.8	55.5	58.8	59.5	66.8	73.8	76.5	82.0	85.0	93.0	100.0	114.0
35.7	37.0	39.5	42.5	43.2	47.0	49.7	51.2	54.5	55.2	58.5	59.2	66.5	73.5	76.2	81.7	84.7	92.7	99.7	113.7
35.4	36.7	39.2	42.2	42.9	46.7	49.4	50.9	54.2	54.9	58.2	58.9	66.2	73.2	75.9	81.4	84.4	92.4	99.4	113.4
35.1	36.3	38.8	41.8	42.6	46.3	49.1	50.6	53.8	54.6	57.8	58.6	65.8	72.8	75.6	81.1	84.1	92.1	99.1	113.1
34.8	36.0	38.5	41.5	42.3	46.0	48.8	50.3	53.5	54.3	57.5	58.3	65.5	72.5	75.3	80.8	83.8	91.8	98.8	112.8
34.5	35.7	38.2	41.2	42.0	45.7	48.5	50.0	53.2	54.0	57.2	58.0	65.2	72.2	75.0	80.5	83.5	91.5	98.5	112.5
34.1	35.4	37.9	40.9	41.6	45.4	48.1	49.6	52.9	53.6	56.9	57.6	64.9	71.9	74.6	80.1	83.1	91.1	98.1	112.1
33.8	35.1	37.6	40.6	41.3	45.1	47.8	49.3	52.6	53.3	56.6	57.3	64.6	71.6	74.3	79.8	82.8	90.8	97.8	111.8
33.5	34.8	37.3	40.3	41.0	44.8	47.5	49.0	52.3	53.0	56.3	57.0	64.3	71.3	74.0	79.5	82.5	90.5	97.5	111.5
33.2	34.5	37.0	40.0	40.7	44.5	47.2	48.7	52.0	52.7	52.7	56.0	64.0	71.0	73.7	79.2	82.2	90.2	97.2	111.2
32.9	34.1	36.6	39.6	40.4	44.1	46.9	48.4	51.6	52.4	55.6	56.4	63.6	70.6	73.4	78.9	81.9	89.9	96.9	100.9
32.6	33.8	36.3	39.3	40.1	43.8	46.6	48.1	51.3	52.1	55.3	56.1	63.3	70.3	73.1	78.6	81.6	89.6	96.6	110.6
32.3	33.5	36.0	39.0	39.8	43.5	46.3	47.8	51.0	51.8	55.0	55.8	63.0	70.0	72.8	78.3	81.3	89.3	96.3	110.3
32.0	33.2	35.7	38.7	39.5	43.2	46.0	47.5	50.7	51.5	54.7	55.5	62.7	69.7	72.5	78.0	81.0	89.0	96.0	110.0
31.0	32.3	34.8	37.8	38.5	42.3	45.0	46.5	49.8	50.5	53.8	54.5	61.8	68.8	71.5	77.0	80.0	88.0	95.0	109.0
30.4	31.6	34.1	37.1	37.9	41.6	44.4	45.9	49.1	49.9	53.1	53.9	61.1	68.1	70.9	76.4	79.4	87.4	94.4	108.4
29.4	30.7	33.2	36.2	36.9	40.7	43.4	44.9	48.2	48.9	52.2	52.9	60.2	67.2	69.9	75.4	78.4	86.4	93.4	107.4
27.9	29.1	31.6	34.6	35.4	39.1	41.9	43.4	46.6	47.4	50.6	51.4	58.6	65.6	68.4	73.9	76.9	84.9	91.9	105.9
26.3	27.5	30.0	33.0	33.8	37.5	40.3	41.8	45.0	45.8	49.0	49.8	57.0	64.0	66.8	72.3	75.3	83.3	90.3	104.3
32.7	34.0	36.5	39.5	40.2	44.0	46.7	48.2	51.5	52.2	55.5	56.2	63.5	70.5	73.2	78.7	81.7	89.7	96.7	100.7
32.4	33.7	36.2	39.2	39.9	43.7	46.4	47.9	51.2	51.9	55.2	55.9	63.2	70.2	72.9	78.4	81.4	89.4	96.4	110.4
32.1	33.4	35.9	38.9	39.6	43.4	46.1	47.6	50.9	51.6	54.9	55.6	62.9	69.9	72.6	78.1	81.1	89.1	96.1	110.1
34.6	35.9	38.4	41.4	42.1	45.9	48.6	50.1	53.4	54.1	57.4	58.1	65.4	72.4	75.1	80.6	83.6	91.6	98.6	112.6
34.3	35.6	38.1	41.1	41.8	45.6	48.3	49.8	53.1	53.8	57.1	57.8	65.1	72.1	74.8	80.3	83.3	91.3	98.3	112.3
34.0	35.2	37.7	40.7	41.5	45.2	48.0	49.5	52.7	53.5	56.7	57.5	64.7	71.7	74.5	80.0	83.0	91.0	98.0	112.0
33.7	34.9	37.4	40.4	41.2	44.9	47.7	49.2	52.4	53.2	56.4	57.2	64.4	71.4	74.2	79.7	82.7	90.7	97.7	111.7
33.4	34.6	37.1	40.1	40.9	44.6	47.4	48.9	52.1	52.9	56.1	56.9	64.1	71.1	73.9	79.4	82.4	90.4	97.4	111.4
33.1	34.3	36.8	39.8	40.6	44.3	47.1	48.6	51.8	52.6	55.8	56.6	63.8	70.8	73.6	79.1	82.1	90.1	97.1	111.1
35.9	37.1	39.6	42.6	43.4	47.1	49.9	51.4	54.6	55.1	58.6	59.4	66.6	73.6	76.4	81.9	84.9	92.9	99.9	113.9
35.6	36.8	39.3	42.3	43.1	46.8	49.6	51.1	54.3	55.1	58.3	59.1	66.3	73.3	76.1	81.6	84.6	92.6	99.6	113.6
35.2	36.5	39.0	42.0	42.7	46.5	49.2	50.7	54.0	54.7	58.0	58.7	66.0	73.0	75.7	81.2	84.2	92.2	99.2	113.2
34.9	36.2	38.7	41.7	42.4	46.2	48.9	50.4	53.7	54.4	57.7	58.4	65.7	72.7	75.4	80.9	83.9	91.9	98.9	112.9
36.8	38.1	40.6	43.6	44.3	48.1	50.8	52.3	55.6	56.3	59.6	60.3	67.6	74.6	77.3	82.8	85.8	93.8	100.8	114.8
36.5	37.8	40.3	43.3	44.0	47.8	50.5	52.0	55.3	56.0	59.3	60.0	67.3	74.3	77.0	82.2	85.5	93.5	100.5	114.5
36.2	37.4	39.9	42.9	43.7	47.4	50.2	51.7	54.9	55.7	58.9	59.7	66.9	73.9	76.7	82.2	85.2	93.2	100.2	114.2
30.7	31.9	34.4	37.4	38.2	41.9	44.7	46.2	49.4	50.2	53.4	54.2	61.4	68.4	71.2	76.7	79.7	87.7	94.7	108.7
37.1	38.4	40.9	43.9	44.6	48.4	51.1	52.6	55.9	56.6	59.9	60.6	67.9	74.9	77.6	83.1	86.1	94.1	101.1	115.1
33.2	34.5	37.0	40.0	40.7	44.5	47.2	48.7	52.0	52.7	56.0	56.7	64.0	71.0	73.7	79.2	82.2	90.2	97.2	111.2
32.9	34.1	36.6	39.6	40.4	44.1	46.9	48.4	51.6	52.4	55.6	56.4	63.6	70.6	73.4	78.9	81.9	89.9	96.9	110.9
32.6	33.8	36.3	39.3	40.1	43.8	46.6	48.1	51.3	52.1	55.3	56.1	63.3	70.3	73.1	78.6	81.6	89.6	96.6	110.6
32.3	33.5	36.0	39.0	39.8	43.5	46.3	47.8	51.0	51.8	55.0	55.8	63.0	70.0	72.8	78.3	81.3	89.3	96.3	110.3
34.1	35.4	37.9	40.9	41.6	45.4	48.1	49.6	52.9	53.6	56.9	57.6	64.9	71.9	74.6	80.1	83.1	91.1	98.1	112.1
33.8	35.1	37.6	40.6	41.3	45.1	47.8	49.3	52.6	53.3	56.6	57.3	64.6	71.6	74.3	79.8	82.8	90.8	97.8	111.8
33.5	34.8	37.3	40.3	41.0	44.8	47.5	49.0	52.3	53.0	56.3	57.0	64.3	71.3	74.0	79.5	82.5	90.5	97.5	111.5
29.9	31.2	33.7	36.7	37.4	41.2	43.9	45.4	48.7	49.4	52.7	53.4	60.7	67.7	70.4	75.9	78.9	86.9	93.9	107.9
34.8	36.0	38.5	41.5	42.3	46.0	48.8	50.3	53.5	54.3	57.5	58.3	65.5	72.5	75.3	80.8	83.8	91.8	98.8	112.8
34.5	35.7	38.2	41.2	42.0	45.7	48.5	50.0	53.2	54.0	67.2	58.0	65.2	72.2	75.0	80.5	83.5	91.5	98.5	112.5
31.5	32.7	35.2	38.2	38.2	42.7	45.5	47.0	50.2	51.0	54.2	55.0	62.2	69.2	72.0	77.5	80.5	88.5	95.5	109.5
35.4	36.7	39.2	42.2	42.9	46.7	49.4	50.9	54.2	54.9	58.2	58.9	66.2	73.2	75.9	81.4	84.4	92.4	99.4	113.4
35.1	36.3	38.8	41.8	42.6	46.3	49.1	50.6	53.8	54.6	57.8	58.6	65.8	72.8	75.6	81.1	84.1	92.1	99.1	113.1
32.4	33.7	36.2	39.2	39.9	43.7	46.4	47.9	51.2	51.9	55.2	55.9	63.2	70.2	72.9	78.4	81.4	89.4	96.4	110.4
36.0	37.3	39.8	42.8	43.5	47.3	50.0	51.5	54.8	55.5	58.8	59.5	66.8	73.8	76.5	82.0	83.0	93.0	100.0	114.0
35.7	37.0	39.5	42.5	43.2	47.0	49.7	51.2	54.5	55.2	58.5	59.2	66.5	73.5	76.2	81.7	84.7	92.7	99.7	113.7
33.0	34.3	36.8	39.8	40.5	44.3	47.1	48.6	51.8	52.6	55.8	56.6	63.8	70.8	73.6	79.1	82.1	90.1	97.1	111.1
32.7	34.0	36.5	39.5	40.2	44.0	46.7	48.2	51.5	52.2	55.5	56.2	63.5	70.5	73.2	78.7	81.7	89.7	96.7	110.7
27.1	28.3	30.8	33.8	34.6	38.3	41.1	42.6	45.8	46.6	49.8	50.6	57.8	64.8	67.6	73.1	76.1	84.1	91.1	105.1
36.3	37.6	40.1	43.1	43.8	47.6	50.3	51.8	55.1	55.8	59.1	59.8	67.1	74.1	76.8	82.3	85.3	93.3	100.3	114.3
33.7	34.9	37.4	40.4	41.2	44.9	47.7	49.2	52.4	53.2	56.4	57.2	64.4	71.4	74.2	79.7	82.7	90.7	97.7	111.7
33.4	34.6	37.1	40.1	40.9	44.6	47.4	48.9	52.1	52.9	56.1	56.9	64.1	71.1	73.9	79.4	82.4	90.4	97.4	111.4
37.0	38.2	40.7	43.7	44.5	48.2	51.0	52.5	55.7	56.5	59.7	60.5	67.7	74.7	77.5	83.0	86.0	94.0	101.0	115.0
36.7	37.9	40.4	43.4	44.2	47.9	50.7	52.2	55.4	56.2	59.4	60.2	67.4	74.4	77.2	82.7	85.7	93.7	100.7	114.7
34.3	35.6	38.1	41.1	41.8	45.6	48.3	49.8	53.1	53.8	57.1	57.8	65.1	72.1	74.8	80.3	83.3	91.3	98.3	112.3
34.0	35.2	37.7	40.7	41.5	45.2	48.0	49.5	52.7	53.5	56.7	57.5	64.7	71.7	74.5	80.0	83.0	91.0	98.0	112.0
31.6	32.9	35.4	38.4	39.1	42.9	45.6	47.1	50.4	51.1	54.4	55.1	62.4	69.4	72.1	77.6	80.6	88.6	95.6	109.6
28.7	29.9	32.4	35.4	36.2	39.9	42.7	44.2	47.4	48.2	51.4	52.2	59.4	66.4	69.2	74.7	77.7	85.7	92.7	106.7
34.9	36.2	38.7	41.7	42.4	46.2	48.9	50.4	53.7	54.4	57.7	58.4	65.7	72.7	75.4	80.9	83.9	91.0	98.9	112.9
34.6	35.9	38.4	41.4	42.1	45.9	48.6	50.1	53.4	54.1	57.4	58.1	65.4	72.4	75.1	80.6	83.6	91.6	98.6	112.6
32.6	33.8	36.3	39.3	40.1	43.8	46.6	48.1	51.3	52.1	55.3	56.1	63.3	70.3	73.1	78.6	81.6	89.6	96.6	110.6
30.2	31.5	34.0	37.0	37.7	41.5	44.2	45.7	49.0	49.7	53.0	53.7	61.0	68.0	70.7	76.2	79.2	87.2	94.2	108.2
35.2	36.5	39.0	42.0	42.7	46.5	49.2	50.7	54.0	54.7	58.0	58.7	66.0	73.0	75.7	81.2	84.2	92.2	99.2	113.2
33.2	34.5	37.0	40.0	40.7	44.5	47.2	48.7	52.0	52.7	56.0	56.7	64.0	71.0	73.7	79.2	82.2	90.2	97.2	111.2
32.9	34.1	36.6	39.6	40.4	44.1	46.9	48.4	51.6	52.4	55.6	56.4	63.6	70.6	73.4	78.9	81.9	89.9	96.9	110.9
35.6	36.8	39.3	42.3	43.1	46.8	49.6	51.1	54.3	55.1	58.3	59.1	66.3	73.3	76.1	81.6	84.6	92.6	99.6	113.6
33.5	34.8	37.3	40.3	41.0	44.8	47.5	49.0	52.3	53.0	56.3	57.0	64.3	71.3	74.0	79.5	82.5	90.5	97.5	111.5
31.2	32.4	34.9	37.9	38.7	42.4	45.2	46.7	49.9	50.7	53.9	54.7	61.9	68.9	71.7	77.2	80.2	88.2	95.2	109.2
35.9	37.1	39.6	42.6	43.4	47.1	49.9	51.4	54.6	55.4	58.6	59.4	66.6	73.6	76.4	81.9	84.9	92.9	99.9	113.9
			1.00							1.08								1.15	

L DRIVE SELECTION TABLES

	SHEAVES Outside Diameters		DRIVEN RPM AND HORSEPOWER PER RIB						How to specify SHEAVE PART NUMBER For Example: Sheave 16L46 16 (Grooves) L (Section) 46 (4.6" O.D.)							How to specify BELT PART NUMBER For example: Belt 1120L16 1120 (112.0" Nom. E.L.) L (Section) 16 (Ribs)					
Speed Ratio			1160 RPM DriveR		1750 RPM DriveR		3450 RPM DriveR		NOMINAL (STOCK & NON-STOCK) BELT EFF. LENGTHS - INCHES											
									50.0	54.0	56.0	61.5	63.5	65.5	67.5	69.5	72.5	76.5	78.0	79.5	81.5
									NOMINAL CENTER DISTANCE - INCHES											
1.17	4.60	5.40	991	1.89	1495	2.65	2948	4.38	17.1	19.1	20.1	22.9	23.9	24.9	25.9	26.9	28.4	30.4	31.1	31.9	32.9
1.17	4.80	5.60	991	2.02	1495	2.83	2948	4.66	16.8	18.8	19.8	22.6	23.6	24.6	25.6	26.6	28.1	30.1	30.8	31.6	32.6
1.17	6.00	7.00	991	2.73	1495	3.83	2948	6.17	14.8	16.8	17.8	20.5	21.5	22.5	23.5	24.5	26.0	28.0	28.8	29.5	30.5
1.18	3.40	4.00	983	1.16	1483	1.60	2923	2.63	19.2	21.2	22.2	24.9	25.9	26.9	27.9	28.9	30.4	32.4	33.2	33.9	34.9
1.18	4.40	5.20	983	1.78	1483	2.49	29.23	4.11	17.5	19.5	20.5	23.2	24.2	25.2	26.2	27.2	28.7	30.7	31.5	32.2	33.2
1.19	3.20	3.80	974	1.04	1470	1.43	2899	2.32	19.5	21.5	22.5	25.3	26.3	27.3	28.3	29.3	30.8	32.8	33.5	34.3	35.3
1.19	4.20	5.00	974	1.66	1470	2.32	2899	3.83	17.8	19.8	20.8	23.5	24.5	25.5	26.5	27.5	29.0	31.0	31.8	32.5	33.5
1.19	5.20	6.20	974	2.26	1470	3.17	2899	5.21	16.0	18.0	19.0	21.8	22.3	23.8	24.8	25.8	27.3	29.3	30.0	30.8	31.8
1.19	5.40	6.40	974	2.38	1470	3.34	2899	5.46	15.7	17.7	18.7	21.5	22.5	23.5	24.5	25.5	27.0	29.0	29.7	30.5	31.5
1.19	6.20	7.40	974	2.85	1470	4.00	2899	6.42	14.3	16.3	17.3	20.1	21.1	22.1	23.1	24.1	25.6	27.6	28.3	29.1	30.1
1.20	3.00	3.60	966	0.91	1458	1.25	2875	2.01	19.8	21.8	22.8	25.6	26.6	27.6	28.6	29.6	31.1	33.1	33.8	34.6	35.6
1.20	4.00	4.80	966	1.54	1458	2.15	2875	3.55	18.1	20.1	21.1	23.8	24.8	25.8	26.8	27.8	29.3	31.3	32.1	32.8	33.8
1.20	5.00	6.00	966	2.14	1458	3.01	2875	4.95	16.4	18.4	19.4	22.1	23.1	24.1	25.1	26.1	27.6	29.6	30.4	31.1	32.1
1.20	10.00	12.00	966	4.95	1458	6.82						13.4	14.4	15.4	16.4	17.5	19.0	21.0	21.7	22.5	23.5
1.21	3.80	4.60	958	1.42	1446	1.97	2851	3.26	18.4	20.4	21.4	24.4	25.2	26.2	27.2	28.2	29.7	31.7	32.4	33.2	34.2
1.21	4.80	5.80	958	2.03	1446	2.84	2851	4.69	16.7	18.7	19.7	22.4	23.4	24.4	25.4	26.4	27.9	29.9	30.7	31.4	32.4
1.21	5.80	7.00	958	2.62	1446	3.68	2851	5.97	14.9	16.9	17.9	20.7	21.7	22.7	23.7	24.7	26.2	28.2	28.9	29.7	30.7
1.22	3.60	4.40	950	1.29	1434	1.80	2827	2.97	18.7	20.7	21.7	24.5	25.5	26.5	27.5	28.5	30.0	32.0	32.7	33.5	34.5
1.22	4.60	5.60	950	1.91	1434	2.67	2827	4.42	17.0	19.0	20.0	22.7	23.7	24.7	25.7	26.7	28.2	30.2	31.0	31.7	32.7
1.22	7.40	9.00	950	3.54	1434	4.95			12.1	14.1	15.1	17.9	18.9	19.9	20.9	21.9	23.4	25.4	26.1	26.9	27.9
1.23	4.40	5.40	943	1.79	1422	2.51	2804	4.15	17.3	19.3	20.3	23.1	24.1	25.1	26.1	27.1	28.6	30.6	31.3	32.1	33.1
1.23	5.20	6.40	943	2.27	1422	3.19	2804	5.24	15.9	17.9	18.9	21.6	22.6	23.6	24.6	25.6	27.1	29.1	29.9	30.6	31.6
1.23	6.00	7.40	943	2.74	1422	3.85	2804	6.22	14.5	16.5	17.5	20.2	21.2	22.2	23.2	24.2	25.7	27.7	28.5	29.2	30.2
1.24	3.40	4.20	935	1.17	1411	1.63	2782	2.67	19.0	21.0	22.0	24.8	25.8	26.8	27.8	28.8	30.3	32.3	33.0	33.8	34.8
1.24	4.20	5.20	935	1.67	1411	2.34	2782	3.87	17.6	19.6	20.6	23.4	24.4	25.4	26.4	27.4	28.9	30.9	31.6	32.4	33.4
1.24	5.00	6.20	935	2.15	1411	3.02	2782	4.98	16.2	18.2	19.2	21.9	23.0	24.0	25.0	26.0	27.5	29.5	30.2	31.0	32.0
1.25	3.20	4.00	928	1.05	1400	1.45	2760	2.36	19.3	21.3	22.3	25.1	26.1	27.1	28.1	29.1	30.6	32.6	33.3	34.1	35.1
1.25	4.00	5.00	928	1.55	1400	2.16	2760	3.59	17.9	19.9	20.9	23.7	24.7	25.7	26.7	27.7	29.2	31.2	31.9	32.7	33.7
1.25	4.80	6.00	928	2.04	1400	2.86	2760	4.72	16.5	18.5	19.5	22.3	23.3	24.3	25.3	26.3	27.8	29.8	30.5	31.3	32.3
1.25	5.60	7.00	928	2.51	1400	3.53	2760	5.75	15.1	17.1	18.1	20.8	21.8	22.8	23.8	24.8	26.3	28.4	29.1	29.9	30.9
1.25	6.40	8.00	928	2.98	1400	4.18	2760	6.68	13.7	15.7	16.7	19.4	20.4	21.4	22.4	23.4	24.9	26.9	27.7	28.4	29.4
1.25	8.00	10.00	928	3.89	1400	5.42			10.8	12.8	13.8	16.6	17.6	18.6	19.6	20.6	22.1	24.1	24.8	25.6	26.6
1.26	3.80	4.80	920	1.43	1388	1.99	2738	3.29	18.2	20.2	21.2	24.0	25.0	26.0	27.0	28.0	29.5	31.5	32.2	33.0	34.0
1.26	4.60	5.80	920	1.92	1388	2.69	2738	4.45	16.8	18.8	19.8	22.6	23.6	24.6	25.6	26.6	28.1	30.1	30.8	31.6	32.6
1.27	3.00	3.80	913	0.93	1377	1.27	2716	2.06	19.7	21.7	22.7	25.4	26.4	27.4	28.4	29.4	30.9	32.9	33.7	34.4	35.4
1.27	4.40	5.60	913	1.80	1377	2.52	2716	4.18	17.1	19.1	20.1	22.9	23.9	24.9	25.9	26.9	28.4	30.4	31.1	31.9	32.9
1.28	3.60	4.60	906	1.31	1367	1.82	2695	3.00	18.6	20.6	21.6	24.3	25.3	26.3	27.3	28.3	29.8	31.8	32.6	33.3	34.3
1.28	5.00	6.40	906	2.16	1367	3.04	2695	5.01	16.0	18.0	19.0	21.8	22.8	23.8	24.8	25.8	27.3	29.3	30.0	30.8	31.8
1.28	5.80	7.40	906	2.64	1367	3.70	2695	6.02	14.6	16.6	17.6	20.4	21.4	22.4	23.4	24.4	25.9	27.9	28.6	29.4	30.4
1.29	3.40	4.40	899	1.18	1356	1.64	2674	2.70	18.9	20.9	21.9	24.6	25.6	26.6	27.6	28.6	30.1	32.1	32.9	33.6	34.6
1.29	4.20	5.40	899	1.68	1356	2.35	2674	3.90	17.5	19.5	20.5	23.2	24.2	25.2	26.2	27.2	28.7	30.7	31.5	32.2	33.2
1.29	4.80	6.20	899	2.04	1356	2.87	2674	4.74	16.4	18.4	19.4	22.1	23.1	24.1	25.1	26.1	27.6	29.6	30.4	31.1	32.1
1.29	6.20	8.00	899	2.87	1356	4.03	2674	6.48	13.8	15.8	16.8	19.6	20.6	21.6	22.6	23.6	25.1	27.1	27.8	28.6	29.6
1.29	7.00	9.00	899	3.33	1356	4.67	2674	7.33	12.4	14.4	15.4	18.2	19.2	20.2	21.2	22.2	23.7	25.7	26.4	27.2	28.2
1.30	4.00	5.20	892	1.56	1346	2.18	2653	3.61	17.8	19.8	20.8	23.5	24.5	25.5	26.5	27.5	29.0	31.0	31.8	32.5	33.5
1.30	4.60	6.00	892	1.92	1346	2.70	2653	4.47	16.7	18.7	19.7	22.4	23.4	24.4	25.4	26.4	27.9	29.9	30.7	31.4	32.4
1.30	5.40	7.00	892	2.40	1346	3.38	2653	5.53	15.2	17.2	18.2	21.0	22.0	23.0	24.0	25.0	26.5	28.5	29.3	30.0	31.0
1.31	3.20	4.20	885	1.06	1335	1.47	2633	2.40	19.2	21.2	22.2	24.9	25.9	26.9	27.9	28.9	30.4	32.4	33.2	33.9	34.9
1.32	3.80	5.00	878	1.44	1325	2.01	2613	3.33	18.1	20.1	21.1	23.8	24.8	25.8	26.8	27.8	29.3	31.3	32.1	32.8	33.8
1.32	4.40	5.80	878	1.81	1325	2.53	2613	4.20	17.0	19.0	20.0	22.7	23.7	24.7	25.7	26.7	28.2	30.2	31.0	31.7	32.7
1.32	5.60	7.40	878	2.53	1325	3.55	2613	5.79	14.8	16.8	17.5	20.5	21.5	22.5	23.5	24.5	26.0	28.0	28.8	29.5	30.5
1.33	3.00	4.00	872	0.94	1315	1.29	2594	2.09	19.5	21.5	22.5	25.3	26.3	27.3	28.3	29.3	30.8	32.8	33.5	34.3	35.3
1.33	3.60	4.80	872	1.32	1315	1.83	2594	3.03	18.4	20.4	21.4	24.1	25.1	26.1	27.1	28.1	29.6	31.7	32.4	33.2	34.2
1.33	4.20	5.60	872	1.69	1315	2.36	2594	3.92	17.3	19.3	20.3	23.0	24.0	25.0	26.0	27.0	28.5	30.5	31.3	32.0	33.0
1.33	4.80	6.40	872	2.05	1315	2.88	2594	4.76	16.2	18.2	19.2	21.9	22.9	23.9	24.9	25.9	27.4	29.4	30.2	30.9	31.9
1.33	6.00	8.00	872	2.76	1315	3.88	2594	6.28	14.0	16.0	17.0	19.7	20.7	21.7	22.7	23.7	25.2	27.2	28.0	28.7	29.7
1.33	9.00	12.00	872	4.45	1315	6.17						14.2	15.2	16.2	17.2	18.2	19.7	21.7	22.5	23.2	24.2
1.35	3.40	4.60	859	1.19	1296	1.66	2555	2.73	18.7	20.7	21.7	24.5	25.5	26.5	27.5	28.5	30.0	32.0	32.7	33.5	34.5
1.35	4.00	5.40	859	1.57	1296	2.19	2555	3.64	17.6	19.6	20.6	23.4	24.4	25.4	26.4	27.4	28.9	30.9	31.6	32.4	33.4
1.35	4.60	6.20	859	1.93	1296	2.71	2555	4.50	16.5	18.5	19.5	22.3	23.3	24.3	25.3	26.3	27.8	29.8	30.5	31.3	32.3
1.35	5.20	7.00	859	2.29	1296	3.22	2555	5.30	15.4	17.4	18.4	21.2	22.2	23.2	24.2	25.2	26.7	28.7	29.4	30.2	31.2
1.35	7.40	10.00	859	3.57	1296	4.99			11.3	13.3	14.3	17.0	18.0	19.0	20.0	21.1	22.6	24.6	25.3	26.1	27.1
1.36	4.40	6.00	852	1.81	1286	2.54	2536	4.22	16.8	18.8	19.8	22.6	23.6	24.6	25.6	26.6	28.1	30.1	30.8	31.6	32.6
1.37	3.80	5.20	846	1.45	1277	2.02	2518	3.35	17.9	19.9	20.9	23.7	24.7	25.7	26.7	27.7	29.2	31.2	31.9	32.7	33.7
1.37	5.40	7.40	846	2.41	1277	3.39	2518	5.57	14.9	16.9	17.9	20.7	21.7	22.7	23.7	24.7	26.2	28.2	28.9	29.7	30.7
1.38	3.20	4.40	840	1.07	1268	1.48	2500	2.43	19.0	21.0	22.0	24.8	25.8	26.8	27.8	28.8	30.3	32.3	33.0	33.8	34.8
1.38	4.20	5.80	840	1.69	1268	2.37	2500	3.94	17.1	19.1	20.1	22.9	23.9	24.9	25.9	26.9	28.4	30.4	31.1	31.9	32.9
1.38	5.80	8.00	840	2.65	1268	3.73	2500	6.06	14.1	16.1	17.1	19.9	20.9	21.9	22.9	23.9	25.4	27.4	28.1	28.9	29.9
1.39	3.60	5.00	834	1.32	1259	1.84	2482	3.05	18.2	20.2	21.2	24.0	25.0	26.0	27.0	28.0	29.5	31.5	32.2	33.0	34.0
1.39	4.60	6.40	834	1.94	1259	2.72	2482	4.51	16.3	18.3	19.3	22.1	23.1	24.1	25.1	26.1	27.6	29.6	30.4	31.1	32.1
1.40	3.00	4.20	828	0.95	1250	1.30	2464	2.12	19.3	21.3	22.3	25.1	26.1	27.1	28.1	29.1	30.6	32.6	33.3	34.1	35.1
1.40	4.00	5.60	828	1.57	1250	2.20	2464	3.66	17.4	19.4	20.4	23.2	24.2	25.2	26.2	27.2	28.7	30.7	31.5	32.2	33.2
1.40	5.00	7.00	828	2.18	1250	3.06	2464	5.06	15.5	17.6	18.6	21.3	22.3	23.3	24.3	25.3	26.8	28.8	29.6	30.3	31.3
1.40	10.00	14.00	828	4.99	1250	6.87								13.8	14.8	15.8	17.3	19.3	20.1	20.8	21.8
1.41	3.40	4.80	822	1.20	1241	1.67	2446	2.75	18.5	20.6	21.6	24.3	25.3	26.3	27.3	28.3	29.8	31.8	32.6	33.3	34.3
1.41	4.40	6.20	822	1.82	1241	2.55	2446	4.24	16.7	18.7	19.7	22.4	23.4	24.4	25.4	26.4	27.9	29.9	30.7	31.4	32.4
1.41	6.40	9.00	822	3.00	1241	4.22	2446	6.76	12.8	14.9	15.9	18.6	19.6	20.6	21.6	22.6	24.1	26.1	26.9	27.6	28.6
1.42	3.80	5.40	816	1.45	1232	2.03	2429	3.37	17.8	19.8	20.8	23.5	24.5	25.5	26.5	27.5	29.0	31.0	31.8	32.5	33.5
1.42	5.20	7.40	816	2.30	1232	3.23	2429	5.33	15.1	17.1	18.1	20.8	21.8	22.8	23.8	24.8	26.3	28.3	29.1	29.8	30.8
1.43	4.20	6.00	811	1.70	1223	2.38	2412	3.96	17.0	19.0	20.0	22.7	23.7	24.7	25.7	26.7	28.2	30.2	31.0	31.7	32.7
	ARC LENGTH FACTOR →								.90							1.00					

L SPEED RATIO RANGE 1.17 - 1.43

Drive Grooves	6	8	10	12	14	16	20
Drive Belt Width	1.11"	1.48"	1.85"	2.22"	2.59"	2.96"	3.70"
Drive Diameter	←	3.0" to 30.0"	→	←	5.4" to 30.0"	→	

NOMINAL (STOCK & NON-STOCK) BELT EFF. LENGTHS - INCHES

84.0	86.5	91.5	97.5	99.0	106.5	112.0	115.0	121.5	123.0	129.5	131.0	145.5	159.5 *	165.0 *	176.0 *	182.0 *	198.0 *	212.0 *	240.0 *
NOMINAL CENTER DISTANCES - INCHES																			
34.1	35.4	37.9	40.9	41.6	45.4	48.1	49.6	52.9	53.6	56.9	57.6	64.9	71.9	74.6	80.1	83.1	91.1	98.1	112.1
33.8	35.1	37.6	40.6	41.3	45.1	47.8	49.3	52.6	53.3	56.6	57.3	64.6	71.6	74.3	79.8	82.8	90.8	97.8	111.8
31.8	33.0	35.5	38.5	39.3	43.0	45.8	47.3	50.5	51.3	54.5	55.3	62.5	69.5	72.3	77.8	80.8	88.8	95.8	109.8
36.2	37.4	39.9	42.9	43.7	47.4	50.2	51.7	54.9	55.7	58.9	59.7	66.9	73.9	76.7	82.2	85.2	93.2	100.2	114.2
34.5	35.7	38.2	41.2	42.0	45.7	48.5	50.0	53.2	54.0	57.2	58.0	65.2	72.2	75.0	80.5	83.5	91.5	98.5	112.5
36.5	37.8	40.3	43.3	44.0	47.8	50.5	52.0	55.3	56.0	59.3	60.0	67.3	74.3	77.0	82.5	85.5	93.5	100.5	114.5
34.8	36.0	38.5	41.5	42.3	46.0	48.8	50.3	53.5	54.3	57.5	58.3	65.5	72.5	75.3	80.8	83.8	91.8	98.8	112.8
33.0	34.3	36.8	39.8	40.5	44.3	47.0	48.5	51.8	52.5	55.8	56.5	63.8	70.8	73.5	79.0	82.0	90.0	97.0	111.0
32.7	34.0	36.5	39.5	40.2	44.0	46.7	48.2	51.5	52.2	55.5	56.2	63.5	70.5	73.2	78.7	81.7	89.7	96.7	110.7
31.3	32.6	35.1	38.1	38.8	42.6	45.3	46.8	50.1	50.8	54.1	54.8	62.1	69.1	71.8	77.3	80.3	88.3	95.3	109.3
36.8	38.1	40.6	43.6	44.3	48.1	50.8	52.3	55.6	56.3	59.6	60.3	67.6	74.6	77.3	82.8	85.8	93.8	100.8	114.8
35.1	36.3	38.8	41.8	42.6	46.3	49.1	50.6	53.8	54.6	57.8	58.6	65.8	72.8	75.6	81.1	84.1	92.1	99.1	113.1
33.4	34.6	37.1	40.1	40.9	44.6	47.4	48.9	52.1	52.9	56.1	56.9	64.1	71.1	73.9	79.4	82.4	90.4	97.4	111.4
24.7	26.0	28.5	31.5	32.2	36.0	38.7	40.2	43.5	44.2	47.5	48.2	55.5	62.5	65.2	70.7	73.7	81.7	88.7	102.7
35.4	36.7	39.2	42.2	42.9	46.7	49.4	50.9	54.2	54.9	58.2	58.9	66.2	73.2	75.9	81.4	84.4	92.4	99.4	113.4
33.7	34.9	37.4	40.4	41.2	44.9	47.7	49.2	52.4	53.2	56.4	57.2	64.4	71.4	74.2	79.7	82.7	90.7	97.7	111.7
31.9	33.2	35.7	38.7	39.4	43.2	45.9	47.4	50.7	51.4	54.7	55.4	62.7	69.7	72.4	77.9	80.9	88.9	96.0	110.0
35.7	37.0	39.5	42.5	43.2	47.0	49.7	51.2	54.5	55.2	58.5	59.2	66.5	73.5	76.2	81.7	84.7	92.7	99.7	113.7
34.0	35.2	37.7	40.7	41.5	45.2	48.0	49.5	52.7	53.5	56.7	57.5	64.7	71.7	74.5	80.0	83.0	91.0	98.0	112.0
29.1	30.4	32.9	35.9	36.6	40.4	43.1	44.6	47.9	48.6	51.9	52.6	59.9	66.9	69.6	75.1	78.1	86.1	93.1	107.1
34.3	35.6	38.1	41.1	41.8	45.6	48.3	49.8	53.1	53.8	57.1	57.8	65.1	72.1	74.8	80.3	83.3	91.3	98.3	112.3
32.9	34.1	36.6	39.6	40.4	44.1	46.9	48.4	51.6	52.4	55.6	56.4	63.6	70.6	73.4	78.9	81.9	89.9	96.9	110.9
31.5	32.7	35.2	38.2	39.0	42.7	45.5	47.0	50.2	51.0	54.2	55.0	62.2	69.2	72.0	77.5	80.5	88.5	95.5	109.5
36.0	37.3	39.8	42.8	43.5	47.3	50.0	51.5	54.8	55.5	58.8	59.5	66.8	73.8	76.5	82.0	85.0	93.0	100.0	114.0
34.6	35.9	38.4	41.4	42.1	45.9	48.6	50.1	53.4	54.1	57.4	58.1	65.4	72.4	75.1	80.6	83.6	91.6	98.6	112.6
33.2	34.5	37.0	40.0	40.7	44.5	47.2	48.7	52.0	52.7	56.0	56.7	64.0	71.0	73.7	79.2	82.2	90.2	97.2	111.2
36.3	37.6	40.1	43.1	43.8	47.6	50.3	51.8	55.1	55.8	59.1	59.8	67.1	74.1	76.8	82.3	85.3	93.3	100.3	114.3
34.9	36.2	38.7	41.7	42.4	46.2	48.9	50.4	53.7	54.4	57.7	58.4	65.7	72.7	75.4	80.9	83.9	91.9	98.9	112.9
33.5	34.8	37.3	40.3	41.0	44.8	47.5	49.0	52.3	53.0	56.3	57.0	64.3	71.3	74.0	79.5	82.5	90.5	97.5	111.5
32.1	33.4	35.9	38.9	39.6	43.4	46.1	47.6	50.9	51.6	54.9	55.6	62.9	69.9	72.6	78.1	81.1	89.1	96.1	110.1
30.7	31.9	34.4	37.4	38.2	41.9	44.7	46.2	49.4	50.2	53.4	54.2	61.4	68.4	71.2	76.7	79.7	87.7	94.7	108.7
27.9	29.1	31.6	34.6	35.4	39.1	41.9	43.4	46.6	47.4	50.6	51.4	58.6	65.6	68.4	73.9	76.9	84.9	91.9	105.9
35.2	36.5	39.0	42.0	42.7	46.5	49.2	50.7	54.0	54.7	58.0	58.7	66.0	73.0	75.7	81.2	84.2	92.2	99.2	113.2
33.8	35.1	37.6	40.6	41.3	45.1	47.8	49.3	52.6	53.3	56.6	57.3	64.6	71.6	74.3	79.8	82.8	90.8	97.8	111.8
36.7	37.9	40.4	43.4	44.2	47.9	50.7	52.2	55.4	56.2	59.4	60.2	67.4	74.4	77.2	82.7	85.7	93.7	100.7	114.7
34.1	35.4	37.9	40.9	41.6	45.4	48.1	49.6	52.9	53.6	56.9	57.6	64.9	71.9	74.6	80.1	83.1	91.1	98.1	112.1
35.6	36.8	39.3	42.3	43.1	46.8	49.6	51.1	54.3	55.1	58.3	59.1	66.3	73.3	76.1	81.6	84.6	92.6	99.6	113.6
33.0	34.3	36.8	39.8	40.5	44.3	47.0	48.5	51.8	52.5	55.8	56.5	63.8	70.8	73.5	79.0	82.0	90.0	97.0	111.0
31.6	32.9	35.4	38.4	39.1	42.9	45.6	47.1	50.4	51.1	54.4	55.1	62.4	69.4	72.1	77.6	80.6	88.6	95.6	109.6
35.9	37.1	39.6	42.6	43.4	47.1	49.9	51.4	54.6	55.4	58.6	59.4	66.6	73.6	76.4	81.9	84.9	92.9	99.9	113.9
34.5	35.7	38.2	41.2	42.0	45.7	48.5	50.0	53.2	54.0	57.2	58.0	65.2	72.2	75.0	80.5	83.5	91.5	98.5	112.5
33.4	34.6	37.1	40.1	40.9	44.6	47.4	48.9	52.1	52.9	56.1	56.9	64.1	71.1	73.9	79.4	82.4	90.4	97.4	111.4
30.8	32.1	34.6	37.6	38.3	42.1	44.8	46.3	49.6	50.3	53.6	54.3	61.6	68.6	71.3	76.8	79.8	87.8	94.8	108.8
29.4	30.7	33.2	36.2	36.9	40.7	43.4	44.9	48.2	48.9	52.2	52.9	60.2	67.2	69.9	75.4	78.4	86.4	93.4	107.4
34.8	36.0	38.5	41.5	42.3	46.0	48.8	50.3	53.5	54.3	57.5	58.3	65.5	72.5	75.3	80.8	83.8	91.8	98.8	112.8
33.7	34.9	37.4	40.4	41.2	44.9	47.7	49.2	52.4	53.2	56.4	57.2	64.4	71.4	74.2	79.7	82.7	90.7	97.7	111.7
32.3	33.5	36.0	39.0	39.8	43.5	46.3	47.8	51.0	51.8	55.0	55.8	63.0	70.0	72.8	78.3	81.3	89.3	96.3	110.3
36.2	37.4	39.9	42.9	43.7	47.4	50.2	51.7	54.9	55.7	58.9	59.7	66.9	73.9	76.7	82.2	85.2	93.2	100.2	114.2
35.1	36.3	38.8	41.8	42.6	46.3	49.1	50.6	53.8	54.6	57.8	58.6	65.8	72.8	75.6	81.1	84.1	92.1	99.1	113.1
34.0	35.2	37.7	40.7	41.5	45.2	48.0	49.5	52.7	53.5	56.7	57.5	64.7	71.7	74.5	80.0	83.0	91.0	98.0	112.0
31.8	33.0	35.5	38.5	39.3	43.0	45.8	47.3	50.5	51.3	54.5	55.3	62.5	69.5	72.3	77.8	80.8	88.8	95.8	109.8
36.5	37.8	40.3	43.3	44.0	47.8	50.5	52.0	55.3	56.0	59.3	60.0	67.3	74.3	77.0	82.5	85.5	93.5	100.5	114.5
35.4	36.7	39.2	42.2	42.9	46.7	49.4	50.9	54.2	54.9	58.2	58.9	66.2	73.2	75.9	81.4	84.4	92.4	99.4	113.4
34.3	35.6	38.1	41.1	41.8	45.6	48.3	49.8	53.1	53.8	57.1	57.8	65.1	72.1	74.8	80.3	83.3	91.3	98.3	112.3
33.2	34.4	36.9	39.9	40.7	44.5	47.2	48.7	52.0	52.7	56.0	56.7	64.0	71.0	73.7	79.2	82.2	90.2	97.2	111.2
31.0	32.2	34.7	37.7	38.5	42.2	45.0	46.5	49.7	50.5	53.8	54.5	61.8	68.8	71.5	77.0	80.0	88.0	85.0	109.0
25.5	26.7	29.2	32.2	33.0	36.7	39.5	41.0	44.2	45.0	48.2	49.0	56.2	63.2	66.0	71.5	74.5	82.5	89.5	103.5
35.7	37.0	39.5	42.5	43.2	47.0	49.7	51.2	54.5	55.2	58.5	59.2	66.5	73.5	76.2	81.7	84.7	92.7	99.7	113.7
34.6	35.9	38.4	41.4	42.1	45.9	48.6	50.1	53.4	54.1	57.4	58.1	65.4	72.4	75.1	80.6	83.6	91.6	98.6	112.6
33.5	34.8	37.3	40.3	41.0	44.8	47.5	49.0	52.3	53.0	56.3	57.0	64.3	71.3	74.0	79.5	82.5	90.5	97.5	111.5
32.4	33.7	36.2	39.2	39.9	43.7	46.4	47.9	51.2	51.9	55.2	55.9	63.2	70.2	72.9	78.4	81.4	89.4	96.4	110.4
28.3	29.6	32.1	35.1	35.8	39.6	42.3	43.8	47.1	47.8	51.1	51.8	59.1	66.1	68.8	74.3	77.3	85.3	92.3	106.3
33.8	35.1	37.6	40.6	41.3	45.1	47.8	49.3	52.6	53.3	56.6	57.3	64.6	71.6	74.3	79.8	82.8	90.8	97.8	111.8
34.9	36.2	38.7	41.7	42.4	46.2	48.9	50.4	53.7	54.4	57.7	58.4	65.7	72.7	75.4	80.9	83.9	91.9	98.9	112.9
31.9	33.2	35.7	38.7	39.4	43.2	45.9	47.4	50.7	51.4	54.7	55.4	62.7	69.7	72.4	77.9	80.9	88.9	95.9	109.9
36.0	37.3	39.8	42.8	43.5	47.3	50.0	51.5	54.8	55.5	58.8	59.5	66.8	73.8	76.5	82.0	85.0	93.0	100.0	114.0
34.1	35.4	37.9	40.9	41.6	45.4	48.1	49.6	52.9	53.6	56.9	57.6	64.9	71.9	74.6	80.1	83.1	91.1	98.1	112.1
31.1	32.4	34.9	37.9	38.7	42.4	45.2	46.7	49.9	50.7	53.9	54.7	61.9	68.9	71.7	77.2	80.2	88.2	95.2	109.2
35.2	36.5	39.0	42.0	42.7	46.5	49.2	50.7	54.0	54.7	58.0	58.7	66.0	73.0	75.7	81.2	84.	292.2	99.2	113.2
33.4	34.6	37.1	40.1	40.9	44.6	47.4	48.9	52.1	52.9	56.1	56.9	64.1	71.1	73.9	79.4	82.4	90.4	97.4	111.4
36.3	37.6	40.1	43.1	43.8	47.6	50.3	51.8	55.1	55.8	59.1	59.8	67.1	74.1	76.8	82.3	85.3	93.3	100.3	114.3
34.5	35.7	38.2	41.2	42.0	45.7	48.5	50.0	53.2	54.0	57.2	58.0	65.2	72.2	75.0	80.5	83.5	91.5	98.5	112.5
32.6	33.8	36.3	39.3	40.1	43.8	46.6	48.1	51.3	52.1	55.3	56.1	63.3	70.3	73.1	78.6	81.6	89.6	96.6	110.6
23.1	24.3	26.8	29.8	30.6	34.4	37.1	38.6	41.9	42.6	45.9	46.6	53.9	60.9	63.6	69.1	72.1	80.1	87.1	101.1
35.6	36.8	39.3	42.3	43.1	46.8	49.6	51.1	54.3	55.1	58.3	59.1	66.3	73.3	76.1	81.6	84.6	92.6	99.6	113.6
33.7	34.9	37.4	40.4	41.2	44.9	47.7	49.2	52.4	53.2	56.4	57.2	64.4	71.4	74.2	79.7	82.7	90.7	97.7	111.7
29.9	31.1	33.6	36.6	37.4	41.1	43.9	45.4	48.6	49.4	52.6	53.4	60.6	67.6	70.4	75.9	78.9	86.9	93.9	107.9
34.8	36.0	38.5	41.5	42.3	46.0	48.8	50.3	53.5	54.3	57.5	58.3	65.5	72.5	75.3	80.8	83.8	91.8	98.8	112.8
32.1	33.3	35.8	38.8	39.6	43.3	46.1	47.6	50.8	51.6	54.8	55.6	62.8	69.9	72.6	78.1	81.1	89.1	96.1	110.1
34.0	35.2	37.7	40.7	41.5	45.2	48.0	49.5	52.7	53.5	56.7	57.5	64.7	71.7	74.3	80.0	83.0	91.0	98.0	112.0
			1.00								1.08							1.15	

* = Non-Standard Lengths

L DRIVE SELECTION TABLES

	SHEAVES Outside Diameters		DRIVEN RPM AND HORSEPOWER PER RIB						How to specify SHEAVE PART NUMBER For Example: Sheave 16L46 16 (Grooves) L (Section) 46 (4.6" O.D.)							How to specify BELT PART NUMBER For example: Belt 1120L16 1120 (112.0" Nom. E.L.) L (Section) 16 (Ribs)					
Speed Ratio			1160 RPM DriveR		1750 RPM DriveR		3450 RPM DriveR		NOMINAL (STOCK & NON-STOCK) BELT EFF. LENGTHS - INCHES												
									50.0	54.0	56.0	61.5	63.5	65.5	67.5	69.5	72.5	76.5	78.0	79.5	81.5
									NOMINAL CENTER DISTANCE - INCHES												
1.43	5.60	8.00	811	2.54	1223	3.57	2412	5.84	14.3	16.3	17.3	20.0	21.0	22.0	23.0	24.0	25.5	27.5	28.3	29.0	30.1
1.43	7.00	10.00	811	3.35	1223	4.69	2412	7.38	11.6	13.6	14.6	17.3	18.3	19.3	20.3	21.4	22.9	24.9	25.6	26.4	27.4
1.44	3.20	4.60	805	1.08	1215	1.49	2395	2.45	18.9	19.9	21.9	24.6	25.6	26.6	27.6	28.6	30.1	32.1	32.9	33.6	34.6
1.44	3.60	5.20	805	1.33	1215	1.85	2395	3.07	18.1	20.1	21.1	23.8	24.8	25.8	26.8	27.8	29.3	31.3	32.1	32.8	33.8
1.45	4.00	5.80	800	1.58	1206	2.21	2379	3.67	17.3	19.3	20.3	23.0	24.0	25.0	26.0	27.0	28.5	30.5	31.3	32.0	33.0
1.45	4.40	6.40	800	1.82	1206	2.56	2379	4.25	16.5	18.5	19.5	22.2	23.3	24.3	25.3	26.3	27.8	29.8	30.5	31.3	32.3
1.45	6.20	9.00	800	2.89	1206	4.06	2379	6.55	13.0	15.0	16.0	18.8	19.8	20.	821.8	22.8	24.3	26.3	27.0	27.8	28.8
1.46	4.80	7.00	794	2.07	1198	2.90	2363	4.81	15.7	17.7	18.7	21.5	22.5	23.5	24.5	25.5	27.0	29.0	29.7	30.5	31.5
1.47	3.00	4.40	789	0.95	1190	1.31	2346	2.14	19.2	21.2	22.2	24.9	25.9	26.9	27.9	28.9	30.4	32.4	33.2	33.9	34.9
1.47	3.40	5.00	789	1.21	1190	1.68	2346	2.77	18.4	20.4	21.4	24.1	25.1	26.1	27.1	28.1	29.6	31.6	32.4	33.1	34.1
1.47	3.80	5.60	789	1.46	1190	2.03	2346	3.38	17.6	19.6	20.6	23.4	24.4	25.4	26.4	27.4	28.9	30.9	31.6	32.4	33.4
1.48	4.20	6.20	783	1.70	1182	2.39	2331	3.97	16.8	18.8	19.8	22.6	23.6	24.6	25.6	26.6	28.1	30.1	30.8	31.6	32.6
1.48	5.00	7.40	783	2.19	1182	3.07	2331	5.08	15.2	17.2	18.2	21.0	22.0	23.0	24.0	25.0	26.5	28.5	29.2	30.0	31.0
1.48	5.40	8.00	783	2.43	1182	3.41	2331	5.60	14.4	16.4	17.4	20.2	21.2	22.2	23.2	24.2	25.7	27.7	28.5	29.2	30.2
1.50	3.20	4.80	773	1.08	1166	1.50	2300	2.46	18.7	20.7	21.7	24.5	25.5	26.5	27.5	28.5	30.0	32.0	32.7	33.5	34.5
1.50	3.60	5.40	773	1.33	1166	1.86	2300	3.08	17.9	19.9	20.9	23.7	24.7	25.7	26.7	27.7	29.2	31.2	31.9	32.7	33.7
1.50	4.00	6.00	773	1.58	1166	2.21	2300	3.68	17.1	19.1	20.1	22.9	23.9	24.9	25.9	26.9	28.4	30.4	31.1	31.9	32.9
1.50	6.00	9.00	773	2.78	1166	3.91	2300	6.33	13.1	15.2	16.2	18.9	19.9	20.9	21.9	22.9	24.4	26.4	27.2	27.9	28.9
1.50	8.00	12.00	773	3.92	1166	5.47				11.1	12.1	14.9	15.9	16.9	17.9	18.9	20.5	22.5	23.2	24.0	25.0
1.52	4.20	6.40	763	1.71	1151	2.39	2269	3.98	16.6	18.6	19.6	22.4	23.4	24.4	25.4	26.4	27.9	29.9	30.7	31.4	32.4
1.52	4.60	7.00	763	1.95	1151	2.74	2269	4.55	15.8	17.9	18.9	21.6	22.6	23.6	24.6	25.6	27.1	29.1	29.9	30.6	31.6
1.53	3.00	4.60	758	0.96	1143	1.32	2254	2.15	19.0	21.0	22.0	24.8	25.8	26.8	27.8	28.8	30.3	32.3	33.0	33.8	34.8
1.53	3.40	5.20	758	1.21	1143	1.68	2254	2.78	18.2	20.2	21.2	24.0	25.0	26.0	27.0	28.0	29.5	31.5	32.2	33.0	34.0
1.53	3.80	5.80	758	1.46	1143	2.04	2254	3.39	17.4	18.4	20.4	23.2	24.2	25.2	26.2	27.2	28.7	30.7	31.4	32.2	33.2
1.54	4.80	7.40	753	2.07	1136	2.91	2240	4.83	15.4	17.4	18.4	21.1	22.1	23.1	24.1	25.1	26.6	28.6	29.4	30.1	31.1
1.54	5.20	8.00	753	2.31	1136	3.25	2240	5.36	14.6	16.6	17.6	20.3	21.3	22.3	23.3	24.3	25.9	27.9	28.6	29.4	30.4
1.55	4.00	6.20	748	1.59	1129	2.22	2225	3.70	17.0	19.0	20.0	22.7	23.7	24.7	25.7	26.7	28.2	30.2	31.0	31.7	32.7
1.55	5.80	9.00	748	2.67	1129	3.75	2225	6.11	13.3	15.3	16.3	19.1	20.1	21.1	22.1	23.1	24.6	26.6	27.3	28.1	29.1
1.56	3.20	5.00	743	1.09	1121	1.51	2211	2.48	18.5	20.5	21.5	24.3	25.3	26.3	27.3	28.3	29.8	31.8	32.6	33.3	34.3
1.56	3.60	5.60	743	1.34	1121	1.87	2211	3.10	17.7	19.8	20.8	23.5	24.5	25.5	26.5	27.5	29.0	31.0	31.8	32.5	33.5
1.56	6.40	10.00	743	3.02	1121	4.24	2211	6.79	12.0	14.0	15.0	17.8	18.8	19.8	20.8	21.8	23.3	25.3	26.1	26.8	27.8
1.56	9.00	14.00	743	4.47	1121	6.20							13.5	14.5	15.5	16.5	18.0	20.0	20.8	21.5	22.6
1.58	3.80	6.00	734	1.46	1107	2.05	2183	3.40	17.3	19.3	20.3	23.0	24.0	25.0	26.0	27.0	28.5	30.5	31.3	32.0	33.0
1.59	3.40	5.40	729	1.22	1100	1.69	2169	2.79	18.1	20.1	21.1	23.8	24.8	25.8	26.8	27.8	29.3	31.3	32.1	32.8	33.8
1.59	4.40	7.00	729	1.83	1100	2.57	2169	4.28	16.0	18.0	19.0	21.8	22.8	23.8	24.8	25.8	27.3	29.3	30.0	30.8	31.8
1.60	3.00	4.80	725	0.96	1093	1.33	2156	2.16	18.9	20.9	21.9	24.6	25.6	26.6	27.6	28.6	30.1	32.1	32.9	33.6	34.6
1.60	4.00	6.40	725	1.59	1093	2.22	2156	3.70	16.8	18.8	19.8	22.6	23.6	24.6	25.6	26.6	28.1	30.1	30.8	31.6	32.6
1.60	5.00	8.00	725	2.20	1093	3.09	2156	5.11	14.7	16.7	17.7	20.5	21.5	22.5	23.5	24.5	26.0	28.0	28.8	29.5	30.5
1.60	10.00	16.00	725	5.01	1093	6.89											15.6	17.6	18.3	19.1	20.1
1.61	3.60	5.80	720	1.34	1086	1.87	2142	3.11	17.6	19.6	20.6	23.3	24.3	25.3	26.3	27.3	28.9	30.9	31.6	32.4	33.4
1.61	4.60	7.40	720	1.96	1086	2.75	2142	4.56	15.5	17.5	18.5	21.3	22.3	23.3	24.3	25.3	26.8	28.8	29.5	30.3	31.3
1.61	5.60	9.00	720	2.55	1086	3.59	2142	5.87	13.4	15.4	16.5	19.2	20.2	21.2	22.2	23.2	24.7	26.7	27.5	28.2	29.2
1.61	6.20	10..	720	2.90	1086	4.08	2142	6.58	12.1	14.2	15.2	17.9	18.9	19.9	20.9	22.0	23.5	25.2	26.2	27.0	28.0
1.62	7.40	12.00	716	3.59	1080	5.02				11.5	12.6	115.3	16.4	17.4	18.4	19.4	20.9	22.9	23.7	24.4	25.4
1.63	3.20	5.20	711	1.09	1073	1.51	2116	2.49	18.4	20.4	21.4	24.1	25.1	26.1	27.1	28.1	29.6	31.6	32.4	33.1	34.1
1.63	3.80	6.20	711	1.47	1073	2.05	2116	3.41	17.1	19.1	20.1	22.9	23.9	24.9	25.9	26.9	28.4	30.4	31.1	31.9	32.9
1.65	3.40	5.60	703	1.22	1060	1.69	2090	2.80	17.9	19.9	20.9	23.7	24.7	25.7	26.7	27.7	29.2	31.2	31.9	32.7	33.7
1.67	3.00	5.00	694	0.97	1047	1.33	2065	2.17	18.7	20.7	21.7	24.4	25.5	26.5	27.5	28.5	30.0	32.0	32.7	33.5	34.5
1.67	3.60	6.00	694	1.34	1047	1.87	2065	3.11	17.4	19.4	20.4	23.2	24.2	25.2	26.2	27.2	28.7	30.7	31.4	32.2	33.2
1.67	4.20	7.00	694	1.71	1047	2.40	2065	4.01	16.1	18.2	19.2	21.9	22.9	23.9	24.9	25.9	27.4	29.4	30.2	30.9	31.9
1.67	4.80	8.00	694	2.08	1047	2.92	2065	4.85	14.9	16.9	17.9	20.6	21.6	22.6	23.6	24.7	26.2	28.2	28.9	29.7	30.7
1.67	5.40	9.00	694	2.44	1047	3.43	2065	5.63	13.6	15.6	16.6	19.4	20.4	21.4	22.4	23.4	24.9	26.9	27.6	28.4	29.4
1.67	6.00	10.00	694	2.79	1047	3.92	2065	6.36	12.3	14.3	15.3	18.1	19.1	20.1	21.1	22.1	23.6	25.6	26.4	27.1	28.1
1.68	3.80	6.40	690	1.47	1041	2.05	2053	3.42	16.9	18.9	20.0	22.7	23.7	24.7	25.7	26.7	28.2	30.2	31.0	31.7	32.7
1.68	4.40	7.40	690	1.84	1041	2.58	2053	4.29	15.7	17.7	18.7	21.4	22.4	23.4	24.4	25.4	26.9	28.9	29.7	30.5	31.5
1.69	3.20	5.40	686	1.09	1035	1.52	2041	2.49	18.2	20.2	21.2	24.0	25.0	26.0	27.0	28.0	29.5	31.5	32.2	33.0	34.0
1.71	3.40	5.80	678	1.22	1023	1.70	2017	2.81	17.7	19.7	20.7	23.5	24.5	25.5	26.5	27.5	29.0	31.0	31.8	32.5	33.5
1.71	7.00	12.00	678	3.37	1023	4.72	2017	7.44		11.8	12.8	15.6	16.6	17.7	18.7	19.7	21.2	23.2	24.0	24.7	25.7
1.72	3.60	6.20	674	1.35	1017	1.88	2005	3.12	17.3	19.3	20.3	23.0	24.0	25.0	26.0	27.0	28.5	30.5	31.3	32.0	33.0
1.72	5.80	10.00	674	2.67	1017	3.76	2005	6.13	12.4	14.4	15.4	18.2	19.2	20.2	21.2	22.2	23.8	25.8	26.5	27.3	28.3
1.73	3.00	5.20	670	0.97	1011	1.34	1994	2.18	18.5	20.5	21.5	24.3	25.3	26.3	27.3	28.3	29.8	31.8	32.5	33.3	34.3
1.73	5.20	9.00	670	2.32	1011	3.26	1994	5.39	13.7	15.7	16.7	19.5	20.5	21.5	22.5	23.5	25.0	27.0	27.8	28.5	29.5
1.74	4.60	8.00	666	1.96	1005	2.75	1982	4.58	15.0	17.0	18.0	20.8	21.8	22.8	23.8	24.8	26.3	28.3	29.1	29.8	30.8
1.75	3.20	5.60	662	1.10	1000	1.52	1971	2.50	18.1	20.1	21.1	23.8	24.8	25.8	26.8	27.8	29.3	31.3	32.1	32.8	33.8
1.75	4.00	7.00	662	1.59	1000	2.23	1971	3.72	16.3	18.3	19.3	22.1	23.1	24.1	25.1	26.1	27.6	29.6	30.3	31.1	32.1
1.75	8.00	14.00	662	3.93	1000	5.49						13.1	14.2	15.2	16.2	17.2	18.7	20.8	21.5	22.3	23.3
1.76	3.40	6.00	659	1.22	994	1.70	1960	2.82	17.6	19.6	20.6	23.3	24.3	25.3	26.3	27.3	28.8	30.8	31.6	32.3	33.3
1.76	4.20	7.40	659	1.72	994	2.41	1960	4.02	15.8	17.8	18.8	21.6	22.6	23.6	24.6	25.6	27.1	29.1	29.9	30.6	31.6
1.78	3.60	6.40	651	1.35	983	1.88	1938	3.13	17.1	19.1	20.1	22.9	23.9	24.9	25.9	26.9	28.4	30.4	31.1	31.9	32.9
1.78	9.00	16.00	651	4.48	983	6.22									13.7	14.7	16.2	18.3	19.1	19.8	20.8
1.79	5.60	10.00	648	2.56	977	3.60	1927	5.90	12.6	14.6	15.6	18.4	19.4	20.4	21.4	22.4	23.9	25.9	26.7	27.4	28.4
1.80	3.00	5.40	644	0.97	972	1.34	1916	2.19	18.4	20.4	21.4	24.1	25.1	26.1	27.1	28.1	29.6	31.6	32.4	33.1	34.1
1.80	5.00	9.00	644	2.20	972	3.10	1916	5.13	13.9	15.9	16.9	19.7	20.7	21.7	22.7	23.7	25.2	27.2	27.9	28.7	29.7
1.80	10.00	18.00	644	5.01	972	6.91												15.8	16.5	17.3	18.3
1.81	3.20	5.80	640	1.10	966	1.52	1906	2.51	17.9	19.9	20.9	23.6	24.7	25.7	26.7	27.7	29.2	31.2	31.9	32.7	33.7
1.82	3.40	6.20	637	1.22	961	1.70	1895	2.82	17.4	19.4	20.4	23.2	24.2	25.2	26.2	27.2	28.7	30.7	31.4	32.2	33.2
1.82	4.40	8.00	637	1.84	961	2.59	1895	4.31	15.2	17.2	18.2	20.9	21.9	22.9	23.9	25.0	26.5	28.5	29.2	30.0	31.0
1.84	3.80	7.00	630	1.47	951	2.06	1875	3.43	16.4	18.5	19.5	22.2	23.2	24.2	25.2	26.2	27.7	29.7	30.5	31.2	32.2
1.85	4.00	7.40	627	1.60	945	2.24	1864	3.73	16.0	18.0	19.0	21.7	22.7	23.7	24.7	25.7	27.2	29.3	30.0	30.8	31.8
1.85	5.40	10.00	627	2.44	945	3.44	1864	5.65	12.7	14.7	15.7	18.5	19.5	20.5	21.5	22.5	24.1	26.1	26.8	27.6	28.6
ARC LENGTH FACTOR →									.90							1.00					

L SPEED RATIO RANGE 1.43 - 1.85

Drive Grooves	6	8	10	12	14	16	20
Drive Belt Width	1.11"	1.48"	1.85"	2.22"	2.59"	2.96"	3.70"
Drive Diameter	←	3.0" to 30.0"	→	←	5.4" to 30.0"	→	

NOMINAL (STOCK & NON-STOCK) BELT EFF. LENGTHS - INCHES

84.0	86.5	91.5	97.5	99.0	106.5	112.0	115.0	121.5	123.0	129.5	131.0	145.5	159.5 *	165.0 *	176.0 *	182.0 *	198.0 *	212.0 *	240.0 *
NOMINAL CENTER DISTANCES - INCHES																			
31.3	32.6	35.1	38.1	38.8	42.6	45.3	46.8	50.1	50.8	54.1	54.8	52.1	69.1	71.8	77.3	80.3	88.3	95.3	109.3
28.6	29.9	32.4	335.4	36.1	39.9	42.6	44.1	47.4	48.1	51.4	52.1	59.4	66.4	69.1	74.6	77.6	85.6	92.6	106.6
35.9	37.1	39.6	42.6	43.4	47.1	49.9	51.4	54.6	55.4	58.6	59.4	66.6	73.6	76.4	81.9	84.9	92.9	99.9	113.9
35.1	36.3	38.8	41.8	42.6	46.3	49.1	50.6	53.8	54.6	57.8	58.6	65.8	72.8	75.6	81.1	86.1	92.1	99.1	113.1
34.3	35.5	38.0	41.0	41.8	45.5	48.3	49.8	53.0	53.8	57.0	57.8	65.1	72.1	74.8	80.3	83.3	91.3	98.3	112.3
33.5	34.8	37.3	40.3	41.0	44.8	47.5	49.0	52.3	53.0	56.3	57.0	64.3	71.3	74.0	79.5	82.5	90.5	97.5	111.5
30.0	31.3	33.8	36.8	37.5	41.3	44.0	45.5	48.8	49.5	52.8	53.5	60.8	67.8	70.6	76.1	79.1	87.1	94.1	108.1
32.7	34.0	36.5	39.5	40.2	44.0	46.7	48.2	51.5	52.2	55.5	56.2	63.5	70.5	73.2	78.7	81.7	89.7	96.7	110.7
36.2	37.4	39.9	42.9	43.7	47.4	50.2	51.7	54.9	55.7	58.9	59.7	66.9	73.9	76.7	82.2	85.2	93.2	100.2	114.2
35.4	36.6	39.1	42.1	42.9	46.6	49.4	50.9	54.2	54.9	58.2	58.9	66.2	73.2	75.9	81.4	84.4	92.4	99.4	113.4
34.6	35.9	38.4	41.4	42.1	45.9	48.6	50.1	53.4	54.1	57.4	58.1	65.4	72.4	75.1	80.6	83.6	91.6	98.6	112.6
33.8	35.1	37.6	40.6	41.3	45.1	47.8	49.3	52.6	53.3	56.6	57.3	64.6	71.6	74.3	79.8	82.8	90.8	97.8	111.8
32.2	33.5	36.0	39.0	39.7	43.5	46.3	47.8	51.0	51.8	55.0	55.8	63.0	70.0	72.8	78.3	81.3	89.3	96.3	110.3
31.5	32.7	35.2	38.2	39.0	42.7	45.5	47.0	50.2	51.0	54.2	55.0	62.2	69.2	72.0	77.5	80.5	88.5	95.5	109.5
35.7	37.0	39.5	42.5	43.2	47.0	49.7	51.2	54.5	55.2	58.5	59.2	66.5	73.5	76.2	81.7	84.7	92.7	99.7	113.7
34.9	36.2	38.7	41.7	42.4	46.2	48.9	50.4	53.7	54.4	57.7	58.4	65.7	72.7	75.4	80.9	83.9	91.9	98.9	112.9
34.1	35.4	37.9	40.9	41.6	45.4	48.1	49.6	52.9	53.6	56.9	57.6	64.9	71.9	74.6	80.1	83.1	91.1	98.1	112.1
30.2	31.4	33.9	36.9	37.7	41.4	44.2	45.7	49.0	49.7	53.0	53.7	61.0	68.0	70.7	76.2	79.2	87.2	94.2	108.2
26.2	27.5	30.0	33.0	33.7	37.5	40.3	41.8	45.0	45.8	49.0	49.8	57.0	64.0	66.8	72.3	75.3	83.3	90.3	104.3
33.7	34.9	37.4	40.4	41.2	44.9	47.7	49.2	52.4	53.2	56.4	57.2	64.4	71.4	74.2	79.7	82.7	90.7	97.7	111.7
32.9	34.1	36.6	39.6	40.4	44.1	46.9	48.4	51.6	52.4	55.6	56.4	63.6	70.6	73.4	78.9	81.9	89.9	96.9	110.9
36.0	37.3	39.8	42.8	43.5	47.3	50.0	51.5	54.8	55.5	58.8	59.5	66.8	73.8	76.5	82.0	85.0	93.0	100.0	114.0
35.2	36.5	39.0	42.0	42.7	46.5	49.2	50.7	54.0	54.7	58.0	58.7	66.0	73.0	75.7	81.2	84.2	92.2	99.2	113.2
34.4	35.7	38.2	41.2	42.0	45.7	48.5	50.0	53.2	54.0	57.2	58.0	65.2	72.2	75.0	80.5	83.5	91.5	98.5	112.5
32.4	33.6	36.1	39.2	39.9	43.7	46.4	47.9	51.2	51.9	55.2	55.9	63.2	70.2	72.9	78.4	81.4	89.4	96.4	110.4
31.6	32.9	35.4	38.4	39.1	42.9	45.6	47.1	50.4	51.1	54.4	55.1	62.4	69.4	72.1	77.6	80.6	88.6	95.6	109.6
34.0	35.2	37.7	40.7	41.5	45.2	48.0	49.5	52.7	53.5	56.7	57.5	64.7	71.7	74.5	80.0	83.0	91.0	98.0	112.0
30.3	31.6	34.1	37.1	37.8	41.6	44.4	45.9	49.1	49.9	53.1	53.9	61.1	68.1	70.9	76.4	79.4	87.4	94.4	108.4
35.6	36.8	39.3	42.3	43.1	46.8	49.6	51.1	54.3	55.1	58.3	59.1	66.3	73.3	76.1	81.6	84.6	92.6	99.6	113.6
34.8	36.0	38.5	41.5	42.3	46.0	48.8	50.3	53.5	54.3	57.5	58.3	65.5	72.5	75.3	80.8	83.8	91.8	98.8	112.8
29.1	30.3	32.8	35.8	36.6	40.3	43.1	44.6	47.8	48.6	51.8	52.6	59.8	66.9	69.6	75.1	78.1	96.1	93.1	107.1
23.8	25.1	27.6	30.6	31.3	35.1	37.9	39.4	42.6	43.4	46.6	47.4	54.6	61.6	64.4	69.9	72.9	80.9	87.9	101.9
34.3	35.5	38.0	41.0	41.8	45.5	48.3	49.8	53.0	53.8	57.0	57.8	65.0	72.0	74.8	80.3	83.3	91.3	98.3	112.3
35.1	36.3	38.8	41.8	42.6	46.3	49.1	50.6	53.8	54.6	57.8	58.6	65.8	72.8	75.6	81.1	84.1	92.1	99.1	113.1
33.0	34.3	36.8	39.8	40.5	44.3	47.0	48.5	51.8	52.5	55.8	56.5	63.8	70.8	73.5	79.0	82.0	90.0	97.0	111.0
35.9	37.1	39.6	42.6	43.4	47.1	49.9	51.4	54.6	55.4	58.6	59.4	66.6	73.6	76.4	81.9	84.9	92.9	99.9	113.9
33.8	35.1	37.6	40.6	41.3	45.1	47.8	49.3	52.6	53.3	56.6	57.3	64.6	71.6	74.3	79.8	82.8	90.8	97.8	111.8
31.8	33.0	35.5	38.5	39.3	43.0	45.8	47.3	50.5	51.3	54.5	55.3	62.5	69.5	72.3	77.8	80.8	88.8	95.8	109.8
21.4	22.6	25.2	28.2	28.9	32.7	35.5	37.0	40.2	41.0	44.2	45.0	52.3	59.3	62.0	67.5	70.5	78.5	85.5	99.5
34.6	35.9	38.4	41.4	42.1	45.9	48.6	50.1	53.4	54.1	57.4	58.1	65.4	72.4	75.1	80.6	83.6	91.6	98.6	112.6
32.5	33.8	36.3	39.3	40.1	43.8	46.6	48.1	51.3	52.1	55.3	56.1	63.3	70.3	73.1	78.6	81.6	89.6	96.6	110.6
30.5	31.7	34.2	37.3	38.0	41.8	44.5	46.0	49.3	50.0	53.3	54.0	61.3	68.3	71.0	76.5	79.5	87.5	94.5	108.5
29.2	30.5	33.0	36.0	36.7	40.5	43.2	44.7	48.0	48.7	52.0	52.7	60.0	67.0	69.8	75.3	78.3	86.3	93.3	107.3
26.7	27.9	30.4	33.4	34.2	38.0	40.7	42.2	45.5	46.2	49.5	50.2	57.5	64.5	67.2	72.7	75.7	83.7	90.7	104.7
35.4	36.6	39.1	42.1	42.9	46.6	49.4	50.9	54.9	54.1	58.1	58.9	66.1	73.1	75.9	81.4	84.4	92.4	99.4	113.4
34.1	35.4	37.9	40.9	41.6	45.4	48.1	49.6	52.9	53.6	56.9	57.6	64.9	71.9	74.6	80.1	93.1	91.1	98.1	112.1
34.9	36.2	38.7	41.7	42.4	46.2	48.9	50.4	53.7	54.4	57.7	58.4	65.7	72.7	75.4	80.9	83.9	91.9	98.9	112.9
35.7	37.0	39.5	42.5	43.2	47.0	49.7	51.2	54.5	55.2	58.5	59.2	66.5	73.5	76.2	81.7	84.7	92.7	99.7	113.7
34.4	35.7	38.2	41.2	41.9	45.7	48.4	49.9	53.2	54.0	57.2	58.0	65.2	72.2	75.0	80.5	83.5	91.5	98.5	112.5
33.2	34.4	36.9	39.9	40.7	44.4	47.2	48.7	51.9	52.7	55.9	56.7	63.9	70.9	73.7	79.2	82.2	90.2	97.2	111.2
31.9	33.2	35.7	38.7	39.4	43.2	45.9	47.4	50.7	51.4	54.7	55.4	62.7	69.7	72.4	77.9	80.9	88.9	85.9	109.9
30.6	31.9	34.4	37.4	38.2	41.9	44.7	46.2	49.4	50.2	53.4	54.2	61.4	68.4	71.2	76.7	79.7	87.7	94.7	108.7
29.4	30.6	33.1	36.1	36.9	40.6	43.4	44.9	48.1	48.9	52.2	52.9	60.2	67.2	69.9	75.4	78.4	86.4	93.4	107.4
34.0	35.2	37.7	40.7	41.5	45.2	48.0	49.5	52.7	53.5	56.7	57.5	64.7	71.7	74.5	80.0	83.0	91.0	98.0	112.0
32.7	34.0	36.5	39.5	40.2	44.0	46.7	48.2	51.5	52.2	55.5	56.2	63.5	70.5	73.2	78.7	81.7	89.7	96.7	110.7
35.2	36.5	39.0	42.0	42.7	46.5	49.2	50.7	54.0	54.7	58.0	58.7	66.0	73.0	75.7	81.2	84.2	92.2	99.2	113.2
34.8	36.0	38.5	41.5	42.3	46.0	48.8	50.3	53.5	54.3	57.5	58.3	65.5	72.5	75.3	80.8	83.8	91.8	98.8	112.8
27.0	28.2	30.7	33.7	34.5	38.3	41.0	42.5	45.8	46.5	49.8	50.5	57.8	64.8	67.5	73.0	76.0	84.0	91.1	105.1
34.3	35.5	38.0	41.0	41.8	45.5	48.3	49.8	53.0	53.8	57.0	57.8	65.0	72.0	74.8	80.3	83.3	91.3	98.3	112.3
29.5	30.8	33.3	36.3	37.0	40.8	43.5	45.0	48.3	49.1	52.3	53.1	60.3	67.3	70.1	75.6	78.6	86.6	93.6	107.6
35.5	36.8	39.3	42.3	43.0	46.8	49.6	51.1	54.3	55.1	58.3	59.1	66.3	73.3	76.1	81.6	84.6	92.6	99.6	113.6
30.8	32.0	34.6	37.6	38.3	42.1	44.8	46.3	49.3	50.3	53.6	54.3	61.6	68.6	71.3	76.8	79.8	87.8	94.8	104.8
32.1	33.3	35.8	38.8	39.6	43.3	46.1	47.6	50.8	51.6	54.8	55.6	62.8	69.8	72.6	78.1	81.1	89.1	96.1	110.1
35.1	36.3	38.8	41.8	42.6	46.3	49.1	50.6	53.8	54.6	57.8	58.6	65.8	72.8	75.6	81.1	84.1	92.1	99.1	113.1
33.3	34.6	37.1	40.1	40.8	44.6	47.3	48.8	52.1	52.8	56.1	56.8	64.1	71.1	73.8	79.4	82.4	90.4	97.4	111.4
24.5	25.8	28.3	31.3	32.1	35.9	38.6	40.1	43.4	44.1	47.4	48.1	55.4	62.4	65.2	70.7	73.7	81.7	88.7	102.7
34.6	35.8	38.3	41.4	42.1	45.9	48.6	50.1	53.4	54.1	57.4	58.1	65.4	72.4	75.1	80.6	83.6	91.6	98.6	112.6
32.9	34.1	36.6	39.6	40.4	44.1	46.9	48.4	51.6	52.4	55.6	56.4	63.6	70.6	73.4	78.9	81.9	89.9	96.9	110.9
34.1	35.4	37.9	40.9	41.6	45.4	48.1	49.6	52.9	53.6	56.9	57.6	64.9	71.9	74.6	80.1	83.1	91.1	98.1	112.1
22.1	23.4	25.9	28.9	29.7	33.4	36.2	37.7	41.0	41.7	45.0	45.7	53.0	60.0	62.8	68.3	71.3	79.3	86.3	100.3
29.7	30.9	33.4	36.4	37.2	40.9	43.7	45.2	48.5	49.2	52.5	53.2	60.5	67.5	70.2	75.7	78.7	86.7	93.7	107.7
35.4	36.6	39.1	42.1	42.9	46.6	49.4	50.9	54.1	54.9	58.1	58.9	66.1	73.1	75.9	81.4	84.4	92.4	99.4	113.4
30.9	32.2	34.7	37.7	38.5	42.2	45.0	46.5	49.7	50.5	53.7	54.5	61.7	68.7	71.5	77.0	80.0	88.0	95.0	109.0
19.6	20.9	23.4	26.5	27.2	31.0	33.8	35.3	38.6	39.3	42.6	43.3	50.6	57.6	60.4	65.9	68.9	76.9	83.9	97.9
34.9	36.2	38.7	41.7	42.4	46.2	48.9	50.4	53.7	54.4	57.7	58.4	65.7	72.7	75.4	80.9	83.9	91.9	98.9	112.9
34.4	35.7	38.2	41.2	41.9	45.7	48.4	49.9	53.2	53.9	57.2	57.9	65.2	72.2	75.0	80.5	83.5	91.5	98.5	112.5
32.3	33.5	36.0	39.0	39.7	43.5	46.2	47.7	51.0	51.7	55.0	55.7	63.0	70.0	72.7	78.2	81.2	89.2	96.2	110.3
33.5	34.7	37.2	40.2	41.0	44.7	47.5	49.0	52.2	53.0	56.2	57.0	64.3	71.3	74.0	79.5	82.5	90.5	97.5	111.5
33.0	34.3	36.8	39.8	40.5	44.3	47.0	48.5	51.8	52.5	55.8	56.5	63.8	70.8	73.5	79.0	82.0	90.0	97.0	111.0
29.8	31.1	33.6	36.6	37.3	41.1	43.9	45.4	48.6	49.4	52.6	53.4	60.6	67.6	70.4	75.9	78.9	86.9	93.9	107.9
			1.00							1.08							1.15		

* = Non-Standard Lengths

L DRIVE SELECTION TABLES

	SHEAVES Outside Diameters		DRIVEN RPM AND HORSEPOWER PER RIB						How to specify SHEAVE PART NUMBER For Example: Sheave 16L46 16 (Grooves) L (Section) 46 (4.6" O.D.)							How to specify BELT PART NUMBER For example: Belt 1120L16 1120 (112.0" Nom. E.L.) L (Section) 16 (Ribs)					
Speed Ratio			1160 RPM DriveR		1750 RPM DriveR		3450 RPM DriveR		NOMINAL (STOCK & NON-STOCK) BELT EFF. LENGTHS - INCHES													
									50.0	54.0	56.0	61.5	63.5	65.5	67.5	69.5	72.5	76.5	78.0	79.5	81.5
									NOMINAL CENTER DISTANCE - INCHES													
1.87	3.00	5.60	620	0.97	935	1.34	1844	2.19	18.2	20.2	21.2	24.0	25.0	26.0	27.0	28.0	29.5	31.5	32.2	33.0	34.0
1.88	3.20	6.00	617	1.10	930	1.52	1835	2.51	17.7	19.7	20.7	23.5	24.5	25.5	26.5	27.5	29.0	31.0	31.7	32.5	33.5
1.88	3.40	6.40	617	1.23	930	1.71	1835	2.83	17.2	19.2	20.3	23.0	24.0	25.0	26.0	27.0	28.5	30.5	31.3	32.0	33.0
1.88	4.80	9.00	617	2.09	930	2.93	1835	4.87	14.0	16.0	17.0	19.8	20.8	21.8	22.8	23.8	25.3	27.3	28.1	28.8	29.8
1.88	6.40	12.00	617	3.03	930	4.25	1835	6.83		12.2	13.3	16.1	17.1	18.1	19.1	20.1	21.6	23.6	24.4	25.2	26.2
1.89	7.40	14.00	613	3.60	925	5.04						13.5	14.6	15.6	16.6	17.6	19.2	21.2	22.0	22.7	23.7
1.90	4.20	8.00	610	1.72	921	2.41	1815	4.03	15.3	17.3	18.3	21.1	22.1	23.1	24.1	25.1	26.6	28.6	29.4	30.1	31.1
1.92	5.20	10.00	604	2.33	911	3.27	1796	5.40	12.8	14.9	15.9	18.7	19.7	20.7	21.7	22.7	24.2	26.2	27.0	27.7	28.7
1.93	3.00	5.80	601	0.97	906	1.34	1787	2.20	18.0	20.0	21.0	23.8	24.8	25.8	26.8	27.8	29.3	31.3	32.1	32.8	33.8
1.94	3.20	6.20	597	1.10	902	1.53	1778	2.52	17.6	19.6	20.6	23.3	24.3	25.3	26.3	27.3	28.8	30.8	31.6	32.3	33.3
1.94	3.60	7.00	597	1.35	902	1.89	1778	3.14	16.6	18.6	19.6	22.4	23.4	24.4	25.4	26.4	27.9	29.9	30.6	31.4	32.4
1.94	6.20	12.00	597	2.91	902	4.10	1778	6.61	10.3	12.4	13.4	16.2	17.2	18.2	19.2	20.3	21.8	23.8	24.5	25.3	26.3
1.95	3.80	7.40	594	1.48	897	2.06	1769	3.44	16.1	18.1	19.1	21.9	22.9	23.9	24.9	25.9	27.4	29.4	30.2	30.9	31.9
1.96	4.60	9.00	591	1.97	892	2.76	1760	4.60	14.2	16.2	17.2	20.0	21.0	22.0	23.0	24.0	25.5	27.5	28.2	29.0	30.0
2.00	3.00	6.00	580	0.98	875	1.35	1725	2.20	17.9	19.9	20.9	23.6	24.6	25.6	26.6	27.6	29.1	31.1	31.9	32.7	33.7
2.00	3.20	6.40	580	1.10	875	1.53	1725	2.52	17.4	19.4	20.4	23.2	24.2	25.2	26.2	27.2	28.7	30.7	31.4	32.2	33.2
2.00	4.00	8.00	580	1.60	875	2.24	1725	3.74	15.5	17.5	18.5	21.2	22.2	23.2	24.2	25.2	26.8	28.8	29.5	30.3	31.3
2.00	5.00	10.00	580	2.21	875	3.10	1725	5.14	13.0	15.0	16.0	18.8	19.8	20.8	21.8	22.8	24.3	26.4	27.1	27.9	28.9
2.00	6.00	12.00	580	2.80	875	3.94	1725	6.39	10.4	12.5	13.5	16.3	17.4	18.4	19.4	20.4	21.9	23.9	24.7	25.4	26.4
2.00	7.00	14.00	580	3.38	875	4.73	1725	7.46				13.8	14.9	15.9	16.9	17.9	19.5	21.5	22.2	23.0	24.0
2.00	8.00	16.00	580	3.94	875	5.50								13.3	14.4	15.4	16.9	19.0	19.8	20.5	21.5
2.00	9.00	18.00	580	4.49	875	6.22												16.4	17.2	18.0	19.0
2.00	10.00	20.00	580	5.02	875	6.91															16.4
2.05	4.40	9.00	565	1.85	853	2.59	1682	4.32	14.3	16.3	17.3	20.1	21.1	22.1	23.1	24.1	25.6	27.6	28.4	29.1	30.1
2.06	3.40	7.00	563	1.23	849	1.71	1674	2.83	16.7	18.7	19.8	22.5	23.5	24.5	25.5	26.5	28.0	30.0	30.8	31.5	32.5
2.06	3.60	7.40	563	1.35	849	1.89	1674	3.14	16.3	18.3	19.3	22.0	23.0	24.0	25.0	26.0	27.5	29.6	30.3	31.1	32.1
2.07	3.00	6.20	560	0.98	845	1.35	1666	2.20	17.7	19.7	20.7	23.5	24.5	25.5	26.5	27.5	29.0	31.0	31.7	32.5	33.5
2.07	5.80	12.00	560	2.68	845	3.77	1666	6.16	10.6	12.6	13.7	16.5	17.5	18.5	19.5	20.5	22.1	24.1	24.8	25.6	26.6
2.08	4.80	10.00	557	2.09	841	2.94	1658	4.88	13.1	15.2	16.2	19.0	20.0	21.0	22.0	23.0	24.5	26.5	27.3	28.0	29.0
2.11	3.80	8.00	549	1.48	829	2.07	1635	3.45	15.6	17.6	18.6	21.4	22.4	23.4	24.4	25.4	26.9	28.9	29.7	30.4	31.4
2.13	3.00	6.40	544	0.98	821	1.35	1619	2.21	17.5	19.5	20.6	23.3	24.3	25.3	26.3	27.3	28.8	30.8	31.6	32.3	33.3
2.14	4.20	9.00	542	1.73	817	2.42	1612	4.04	14.4	16.5	17.5	20.2	21.3	22.3	23.3	24.3	25.8	27.8	28.5	29.3	30.3
2.14	8.60	12.00	542	2.57	817	3.61	1612	5.92	10.7	12.8	13.8	16.6	17.6	18.7	19.7	20.7	22.2	24.2	25.0	25.7	26.7
2.16	7.40	16.00	537	3.60	810	5.04								13.7	14.8	15.8	17.3	19.4	20.2	20.9	22.0
2.17	4.60	10.00	534	1.97	806	2.77	1589	4.61	13.3	15.3	16.3	19.1	20.1	21.1	22.1	23.1	24.6	26.7	27.4	28.2	29.2
2.18	3.40	7.40	532	1.23	802	1.71	1582	2.84	16.4	18.4	19.4	22.2	23.2	24.2	25.2	26.2	27.7	29.7	30.5	31.2	32.2
2.19	3.20	7.00	529	1.11	799	1.53	1575	2.53	16.9	18.9	19.9	22.7	23.7	24.7	25.7	26.7	28.2	30.2	30.9	31.7	32.7
2.19	6.40	14.00	529	3.03	799	4.26	1575	6.84			11.3	14.2	15.3	16.3	17.3	18.3	18.9	21.9	22.7	23.4	24.4
2.22	3.60	8.00	522	1.36	788	1.89	1554	3.15	15.7	17.8	18.8	21.5	22.5	23.5	24.5	25.5	27.1	29.1	29.8	30.6	31.6
2.22	5.40	12.00	522	2.45	788	3.44	1554	5.67	10.8	12.9	14.0	16.8	17.8	18.8	19.8	20.8	22.3	24.4	25.1	25.9	26.9
2.22	9.00	20.00	522	4.49	788	6.23														16.0	17.1
2.25	4.00	9.00	515	1.60	777	2.25	1533	3.75	14.6	16.6	17.6	20.4	21.4	22.4	23.4	24.4	25.9	27.9	28.7	29.4	30.4
2.25	8.00	18.00	515	3.94	777	5.50											15.0	17.1	17.9	18.7	19.7
2.26	6.20	14.00	513	2.92	774	4.10	1526	6.63			11.5	14.4	15.4	16.4	17.5	18.5	20.0	22.0	22.8	23.6	24.6
2.27	10.00	511	1.85	770	2.60	1519	4.33		13.4	15.4	16.5	19.2	20.3	21.3	22.3	23.3	24.8	26.8	27.6	28.3	29.3
2.29	7.00	16.00	506	3.38	764	4.74	1506	7.47					12.9	14.0	15.0	16.1	17.6	19.7	20.4	21.2	22.2
2.31	3.20	7.40	502	1.11	757	1.53	1493	2.53	16.5	18.6	19.6	22.3	23.3	24.3	25.3	26.3	27.8	29.9	30.6	31.4	32.4
2.31	5.20	12.00	502	2.33	757	3.28	1493	5.42	11.0	13.1	14.1	16.9	17.9	18.9	20.0	21.0	22.5	24.5	25.3	26.0	27.0
2.33	3.00	7.00	497	0.98	751	1.35	1480	2.21	17.0	19.0	20.1	22.8	23.8	24.8	25.8	26.8	28.3	30.3	31.1	31.8	32.8
2.33	6.00	14.00	497	2.80	751	3.94	1480	6.40			11.6	14.5	15.5	16.6	17.6	18.6	20.2	22.2	23.0	23.7	24.7
2.35	3.40	8.00	493	1.23	744	1.71	1468	2.84	15.9	17.9	18.9	21.7	22.7	23.7	24.7	25.7	27.2	29.2	30.0	30.7	31.7
2.37	3.80	9.00	489	1.48	738	2.07	1455	3.46	14.7	16.8	17.8	20.5	21.5	22.6	23.6	24.6	26.1	28.1	28.8	29.6	30.6
2.38	4.20	10.00	487	1.73	735	2.42	1449	4.04	13.5	15.6	16.6	19.4	20.4	21.4	22.4	23.4	24.9	26.9	27.7	28.5	29.5
2.40	5.00	12.00	483	2.21	729	3.11	1437	5.15	11.1	13.2	14.2	17.0	18.1	19.1	20.1	21.1	22.6	24.7	25.4	26.2	27.2
2.40	10.00	24.00	483	5.025	729	6.92															
2.41	5.80	14.00	481	2.69	726	3.78	1431	6.16			11.7	14.6	15.7	16.7	17.7	18.8	20.3	22.3	23.1	23.9	24.9
2.43	7.40	18.00	477	3.61	720	5.05											15.4	17.5	18.3	19.1	20.1
2.47	3.00	7.40	469	0.98	708	1.35	1396	2.21	16.7	18.7	19.7	22.5	23.5	24.5	25.5	26.5	28.0	30.0	30.8	31.5	32.5
2.50	3.20	8.00	464	1.11	700	1.54	1380	2.53	16.0	18.0	19.1	21.8	22.8	23.8	24.8	25.8	27.4	29.4	30.1	30.9	31.9
2.50	3.60	9.00	464	1.36	700	1.90	1380	3.15	14.9	16.9	17.9	20.7	21.7	22.7	23.7	24.7	26.2	28.2	29.0	29.7	30.7
2.50	4.00	10.00	464	1.61	700	2.25	1380	3.76	13.7	15.7	16.7	19.5	20.5	21.6	22.6	23.6	25.1	27.1	27.8	28.6	29.6
2.50	4.80	12.00	464	2.09	700	2.94	1380	4.89	11.2	13.3	14.4	17.2	18.2	19.2	20.2	21.3	22.8	24.8	25.6	26.3	27.3
2.50	5.60	14.00	464	2.57	700	3.61	1380	5.92			11.9	14.8	15.8	16.8	17.9	18.9	20.4	22.5	23.2	24.0	25.0
2.50	6.40	16.00	464	3.04	700	4.27	1380	6.85					13.3	14.4	15.4	16.5	18.0	20.1	20.9	21.6	22.7
2.50	8.00	20.00	464	3.94	700	5.50													15.9	16.7	17.8
2.57	7.00	18.00	451	3.38	680	4.74	1342	7.47								14.0	15.7	17.8	18.6	19.3	20.4
2.58	6.20	16.00	449	2.92	678	4.10	1337	6.63				12.4	13.4	14.5	15.6	16.6	18.2	20.2	21.0	21.8	22.8
2.59	5.40	14.00	447	2.45	675	3.45	1332	5.68		10.9	12.0	14.9	15.9	17.0	18.0	19.0	20.6	22.6	23.4	24.1	25.2
2.61	4.60	12.00	444	1.97	670	2.77	1321	4.62	11.4	13.5	14.5	17.3	18.3	19.4	20.4	21.4	22.9	24.9	25.7	26.5	27.5
2.63	3.80	10.00	441	1.48	665	2.07	1311	3.46	13.8	15.9	16.9	19.7	20.7	21.7	22.7	23.7	25.2	27.2	28.0	28.7	29.8
2.65	3.40	9.00	437	1.23	660	1.72	1301	2.85	15.0	17.0	18.0	20.8	21.8	22.8	23.9	24.9	26.4	28.4	29.1	29.9	30.9
2.67	3.00	8.00	434	0.98	655	1.35	1292	2.22	16.2	18.2	19.2	22.0	23.0	24.0	25.0	26.0	27.5	29.5	30.3	31.0	32.0
2.67	6.00	16.00	434	2.80	655	3.94	1292	6.40				12.5	13.6	14.6	15.7	16.7	18.3	20.4	21.1	21.9	22.9
2.67	9.00	24.00	434	4.49	655	6.23															
2.69	5.20	14.00	431	2.33	650	3.28	1282	5.42		11.1	12.1	15.0	16.1	17.1	18.1	19.2	20.7	22.8	23.5	24.3	25.3
2.70	7.40	20.00	429	3.61	648	5.05												15.5	16.3	17.1	18.1
2.73	7.40	12.00	424	1.85	641	2.60	1263	4.34	11.5	13.6	14.6	17.5	18.5	19.5	20.5	21.5	23.1	25.1	25.8	26.6	27.6
2.76	5.80	16.00	420	2.69	634	3.78	1250	6.17				12.6	13.7	14.8	15.8	16.9	18.4	20.5	21.3	22.0	23.1
2.78	3.60	10.00	417	1.36	329	1.90	1241	3.16	14.0	16.0	17.0	19.8	20.8	21.8	22.8	23.9	25.4	27.4	28.1	28.9	29.9
2.80	5.00	14.00	414	2.21	625	3.11	1232	5.16		11.2	12.3	15.2	16.2	17.2	18.3	19.3	20.8	22.9	23.7	24.4	25.4
	ARC LENGTH FACTOR →								.90							1.00					

L SPEED RATIO RANGE 1.87 - 2.80

Drive Grooves	6	8	10	12	14	16	20
Drive Belt Width	1.11"	1.48"	1.85"	2.22"	2.59"	2.96"	3.70"
Drive Diameter	←	3.0" to 30.0"	→	←	5.4" to 30.0"	→	

NOMINAL (STOCK & NON-STOCK) BELT EFF. LENGTHS - INCHES																			
84.0	86.5	91.5	97.5	99.0	106.5	112.0	115.0	121.5	123.0	129.5	131.0	145.5	159.5 *	165.0 *	176.0 *	182.0 *	198.0 *	212.0 *	240.0 *
NOMINAL CENTER DISTANCES - INCHES																			
35.2	36.5	39.0	42.0	42.7	46.5	49.2	50.7	54.0	54.7	58.0	58.7	66.0	73.0	75.7	81.2	84.2	92.2	99.2	113.2
34.7	36.0	38.5	41.5	42.3	46.0	48.8	50.3	53.5	54.3	57.5	58.3	65.5	72.5	75.3	80.8	83.8	91.8	98.8	112.8
34.3	35.5	38.0	41.0	41.8	45.5	48.3	49.8	53.0	53.8	57.0	57.8	65.0	72.0	74.8	80.3	83.3	91.3	98.3	112.3
31.1	32.3	34.9	37.9	38.6	42.4	45.1	46.6	49.9	50.6	53.9	54.6	61.9	68.9	71.6	77.1	80.1	88.1	95.1	109.1
27.4	28.7	31.2	34.2	34.9	38.7	41.5	43.0	46.2	47.0	50.2	51.0	58.2	65.2	68.0	73.5	76.5	84.5	91.5	105.5
25.0	26.2	28.8	31.8	32.5	36.3	39.1	40.6	43.8	44.6	47.8	48.6	55.9	62.9	65.6	71.1	74.1	82.1	89.1	103.1
32.4	33.6	36.1	39.1	39.9	43.6	46.4	47.9	51.1	51.9	55.1	55.9	63.1	70.1	72.9	78.4	81.4	89.4	96.4	110.4
30.0	31.2	33.7	36.7	37.5	41.2	44.0	45.5	48.8	49.5	52.8	53.5	60.8	67.8	70.5	76.0	79.0	87.0	94.0	108.0
35.1	36.3	38.8	41.8	42.6	46.3	49.1	50.6	53.8	54.6	57.8	58.6	65.8	72.8	75.6	81.1	84.1	92.1	99.1	113.1
34.6	35.8	38.3	41.3	42.1	45.8	48.6	50.1	53.3	54.1	54	58.1	65.4	72.4	75.1	80.6	83.6	91.6	98.6	112.6
33.6	34.9	37.4	40.4	41.1	44.9	47.6	49.1	52.4	53.2	56.4	57.2	64.4	71.4	74.2	79.7	82.7	90.7	97.7	111.7
27.6	28.8	31.3	34.3	35.1	38.9	41.6	43.1	46.4	47.1	50.4	51.1	57.4	65.4	68.2	73.7	76.7	84.7	91.7	105.7
33.2	34.4	36.9	39.9	40.7	44.4	47.2	48.7	51.9	52.7	55.9	56.7	63.9	70.9	73.7	79.2	82.2	90.2	97.2	111.2
31.2	32.5	35.0	38.0	38.8	42.5	45.3	46.8	50.0	50.8	54.0	54.8	62.0	69.0	71.8	77.3	80.3	88.3	95.3	109.3
34.9	36.2	38.7	41.7	42.4	46.2	48.9	50.4	53.7	54.4	57.7	58.4	65.7	72.7	75.4	80.9	83.9	91.9	98.9	112.9
34.4	35.7	38.2	41.2	41.9	45.7	48.4	49.9	53.2	53.9	57.2	57.9	65.2	72.2	74.9	80.4	83.4	91.4	98.5	112.5
32.5	33.8	36.3	39.3	40.0	43.8	46.5	48.0	51.3	52.0	55.3	56.0	63.3	70.3	73.1	78.6	81.6	89.6	96.6	110.6
30.1	31.4	33.9	36.9	37.6	41.4	44.2	45.7	48.9	49.7	52.9	53.7	60.9	67.9	70.7	76.2	79.2	87.2	94.2	108.2
27.7	29.0	31.5	34.5	35.2	39.0	41.8	43.3	46.5	47.3	50.5	51.3	58.5	65.6	68.3	73.8	76.8	84.8	91.8	105.8
25.3	26.5	29.1	32.1	32.8	36.6	39.4	40.9	44.1	44.9	48.1	48.9	56.2	63.2	65.9	71.4	74.4	82.4	89.4	103.5
22.8	24.1	26.6	29.6	30.4	34.2	36.9	38.5	41.7	42.5	45.7	46.5	53.8	60.8	63.5	69.0	72.0	80.1	87.1	101.1
20.3	21.6	24.1	27.2	27.9	31.7	34.5	36.0	39.3	40.1	43.3	44.1	51.4	58.4	61.1	66.7	69.7	77.7	84.7	98.7
17.7	19.0	21.6	24.7	25.5	29.3	32.1	33.6	36.9	37.6	40.9	41.6	48.9	56.0	58.7	64.3	67.3	75.3	82.3	96.3
31.4	32.6	35.2	38.2	38.9	42.7	45.4	46.9	50.2	50.9	54.2	54.9	62.2	69.2	71.9	77.4	80.4	88.5	95.5	109.5
33.8	35.0	37.5	40.5	41.3	45.1	47.8	49.3	52.6	53.3	56.6	57.3	64.6	71.6	74.3	79.8	82.8	90.8	97.8	111.8
33.3	34.6	37.1	40.1	40.8	44.6	47.3	48.8	52.1	52.8	56.1	56.8	64.1	71.1	73.8	79.3	82.3	90.3	97.3	111.3
34.7	36.0	38.5	41.5	42.2	46.0	48.8	50.3	53.5	54.3	57.5	58.3	65.5	72.5	75.3	80.8	83.8	91.8	98.8	112.8
27.9	29.1	31.6	34.6	35.4	39.2	41.9	43.4	46.7	47.4	50.7	51.4	58.7	65.7	68.5	74.0	77.0	85.0	92.0	106.0
30.3	31.5	34.0	37.0	37.8	41.6	44.3	45.8	49.1	49.8	53.1	53.8	61.1	68.1	70.8	76.3	79.3	87.3	94.3	108.4
32.7	33.9	36.4	39.4	40.2	43.9	46.7	48.2	51.4	52.2	55.4	56.2	63.5	70.5	73.2	78.7	81.7	89.7	96.7	110.7
34.6	35.8	38.3	41.3	42.1	54.8	48.6	50.1	53.3	54.1	57.3	58.1	65.3	72.4	75.1	80.6	83.6	91.6	98.6	112.6
31.5	32.8	35.3	38.3	39.1	42.8	45.6	47.1	50.3	51.1	54.3	55.1	52.3	69.3	72.1	77.6	80.6	88.6	95.6	109.6
28.0	29.3	31.8	34.8	35.5	39.3	42.1	43.6	46.8	47.6	50.8	51.6	58.8	65.9	68.6	74.1	77.1	85.1	92.1	106.1
23.2	24.5	27.0	30.1	30.8	34.6	37.4	38.9	42.2	42.9	46.2	46.9	54.2	61.2	64.0	69.5	72.5	80.5	87.5	101.5
30.4	31.7	34.2	37.2	37.9	41.7	44.5	46.0	49.2	50.0	53.2	54.0	61.2	68.2	71.0	76.5	79.5	87.5	94.5	108.5
33.5	34.7	37.2	40.2	41.0	44.7	47.5	49.0	52.2	53.0	56.2	57.0	64.2	71.2	74.0	79.5	82.5	90.5	97.5	115.5
33.9	35.2	37.7	40.7	41.4	45.2	48.0	49.5	52.7	53.5	56.7	57.5	64.7	71.7	74.5	80.0	83.0	91.0	98.0	112.0
25.7	27.0	29.5	32.5	33.3	37.0	39.8	41.3	44.6	45.3	48.6	49.3	56.6	63.6	66.4	71.9	74.9	82.9	89.9	103.9
32.8	34.1	36.6	39.6	40.3	44.1	46.8	48.3	51.6	52.3	55.6	56.4	63.6	70.6	73.4	78.9	81.9	89.9	96.9	110.9
28.1	29.4	31.9	34.9	35.7	39.5	42.2	43.7	47.0	47.7	51.0	51.7	59.0	66.0	68.8	74.3	77.3	85.3	92.3	106.3
18.4	19.7	22.3	25.4	26.2	30.0	32.8	34.3	37.6	38.3	41.6	42.4	49.7	56.7	59.5	65.0	68.0	76.0	83.1	97.1
31.7	33.0	35.5	38.5	39.2	43.0	45.7	47.2	50.5	51.2	54.5	55.2	62.5	69.5	72.3	77.8	80.8	88.8	95.8	109.8
21.0	22.3	24.8	27.9	28.7	32.5	35.2	36.7	40.0	40.8	44.1	44.8	52.1	59.1	61.9	67.4	70.4	78.4	85.4	99.5
25.8	27.1	29.6	32.7	33.4	37.2	40.0	41.5	44.7	45.5	48.7	49.5	56.8	63.8	66.5	72.0	75.0	83.1	90.1	104.1
30.6	31.8	34.3	37.3	38.1	41.9	44.6	46.1	49.4	50.1	53.4	54.1	61.4	68.4	71.1	76.6	79.6	87.7	94.7	108.7
23.5	24.8	27.3	30.4	31.1	34.9	37.7	39.2	42.5	43.2	46.5	47.2	54.5	61.5	64.3	69.8	72.8	80.8	87.8	101.8
33.6	34.9	37.4	40.4	41.1	44.9	47.6	49.1	52.4	53.1	56.4	57.1	64.4	71.4	74.1	79.7	82.7	90.7	97.7	111.7
28.3	29.6	32.1	35.1	35.8	39.6	42.4	43.9	47.1	47.9	51.1	51.9	59.2	66.2	68.9	74.4	77.4	85.4	92.4	106.4
34.1	35.3	37.8	40.9	41.6	45.4	48.1	49.6	52.9	53.6	56.9	57.6	64.9	71.9	74.6	80.1	93.1	91.1	98.1	112.1
26.0	27.3	29.8	32.8	33.6	37.3	40.1	41.6	44.9	45.6	48.9	49.6	56.9	63.9	66.7	72.2	75.2	83.2	90.2	104.2
33.0	34.2	36.7	39.7	40.5	44.2	47.0	48.5	51.7	52.5	55.8	56.5	63.8	70.8	73.5	79.0	82.0	90.0	97.0	111.0
31.8	33.1	35.6	38.6	39.4	43.1	45.9	47.4	50.6	51.4	54.6	55.4	62.6	69.7	72.4	77.9	80.9	88.9	95.9	109.9
30.7	32.0	34.5	37.5	38.2	42.0	44.8	46.3	49.5	50.3	53.5	54.3	61.5	68.5	71.3	76.8	79.8	87.8	94.8	108.8
28.4	29.7	32.2	35.2	36.0	39.8	42.5	44.0	47.3	48.0	51.3	52.0	59.3	66.3	69.1	74.6	77.6	85.6	92.6	106.6
			20.9	21.7	25.6	28.4	30.0	33.3	34.1	37.4	38.2	45.5	52.6	55.4	60.9	63.9	72.0	79.0	93.0
26.1	27.4	29.9	33.0	33.7	37.5	40.2	41.8	45.0	45.8	49.0	49.8	57.1	64.1	66.8	72.3	75.3	83.4	90.4	104.4
21.4	22.7	25.3	28.3	29.1	32.9	35.7	37.2	40.5	41.2	44.5	45.3	52.5	59.6	62.3	67.9	70.9	78.9	85.9	99.9
33.8	35.0	37.5	40.5	41.3	45.0	47.8	49.3	52.5	53.3	56.5	57.3	64.5	71.6	74.3	79.8	82.8	90.8	97.8	111.8
33.1	34.4	36.9	39.9	40.6	44.4	47.1	48.6	51.9	52.7	55.9	56.7	63.9	70.9	73.7	79.2	82.2	90.2	97.2	111.2
32.0	33.2	35.8	38.8	39.5	43.3	46.0	47.5	50.8	51.5	54.8	55.5	62.8	69.8	72.6	78.1	81.1	89.1	96.1	110.1
30.9	32.1	34.6	37.6	38.4	42.4	44.9	46.4	49.7	50.4	53.7	54.4	61.7	68.7	71.4	77.0	80.0	88.0	95.0	109.0
28.6	29.8	32.4	35.4	36.1	39.9	42.7	44.2	47.4	48.2	51.4	52.2	59.5	66.5	69.2	74.7	77.7	85.7	92.7	106.8
26.3	27.5	30.1	33.1	33.9	37.6	40.4	41.9	45.2	45.9	49.2	49.9	57.2	64.2	67.0	72.5	75.5	83.5	90.5	104.5
23.9	25.2	27.8	30.8	31.6	35.5	38.1	39.6	42.9	43.7	46.9	47.7	55.0	62.0	64.7	70.3	73.3	81.3	88.3	102.3
19.1	20.4	23.0	26.1	26.8	30.7	33.5	35.0	38.3	39.1	42.3	43.1	50.4	57.5	60.2	65.7	68.8	76.8	83.8	97.8
21.7	23.0	25.5	28.6	29.4	33.2	36.0	37.5	40.8	41.5	44.8	45.5	52.8	59.9	62.6	68.2	71.2	79.2	86.2	100.2
24.1	25.3	27.9	30.9	31.7	35.5	38.3	39.8	43.0	43.8	47.1	47.8	55.1	62.1	64.9	70.4	73.4	81.4	88.4	102.5
26.4	27.7	30.2	33.2	34.0	37.8	40.5	42.1	45.3	46.1	49.3	50.1	57.4	64.4	67.1	72.6	75.6	83.7	90.7	104.7
28.7	30.0	32.5	35.5	36.3	40.0	42.8	44.3	47.6	48.3	51.6	52.3	59.6	66.6	69.4	74.9	77.9	85.9	92.9	106.9
31.0	32.3	34.8	37.8	38.5	42.3	45.1	46.6	49.8	50.6	53.8	54.6	61.8	68.8	71.6	77.1	80.1	88.1	95.1	109.1
32.1	33.4	35.9	38.9	39.7	43.4	46.2	47.7	50.9	51.7	54.9	55.7	63.0	70.0	72.7	78.2	81.2	89.2	96.2	110.2
33.3	34.5	37.0	40.0	40.8	44.5	47.3	48.8	52.1	52.8	56.1	56.8	64.1	71.1	73.8	79.3	82.3	90.3	97.3	111.3
24.2	25.5	28.0	31.1	31.8	35.6	38.4	39.9	43.2	43.9	47.2	48.0	55.3	62.3	65.0	70.6	73.6	81.6	88.6	102.6
		18.3	21.5	22.3	26.3	29.1	30.7	34.0	34.8	38.1	38.9	46.2	53.3	56.1	61.6	64.7	72.7	79.7	93.8
26.6	27.8	30.4	33.4	34.1	37.9	40.7	42.2	45.5	46.2	49.5	50.2	57.5	64.5	67.3	72.8	75.8	83.8	90.8	104.8
19.5	20.8	23.4	26.5	27.3	31.1	33.9	35.4	38.7	39.5	42.8	43.5	50.9	57.9	60.7	66.2	69.2	77.2	84.3	98.3
28.9	30.1	32.7	35.7	36.4	40.2	43.0	44.5	47.7	48.5	51.7	52.5	59.8	66.8	69.5	75.0	78.0	86.0	93.0	107.1
24.4	25.6	28.2	31.2	32.0	35.8	38.5	40.1	43.3	44.1	47.4	48.1	55.4	62.4	65.2	70.7	73.7	81.7	88.7	102.8
31.2	32.4	34.9	37.9	38.7	42.5	45.2	46.7	50.0	50.7	54.0	54.7	62.0	69.0	71.8	77.3	80.3	88.3	95.3	109.3
26.7	28.0	30.5	33.5	34.3	38.1	40.8	42.3	45.6	46.4	49.6	50.4	57.7	64.7	67.4	72.9	76.0	84.0	91.0	105.0
			1.00							1.08							1.15		

* = Non-Standard Lengths

L DRIVE SELECTION TABLES

	SHEAVES Outside Diameters		DRIVEN RPM AND HORSEPOWER PER RIB						How to specify SHEAVE PART NUMBER For Example: Sheave 16L46 16 (Grooves) L (Section) 46 (4.6" O.D.)							How to specify BELT PART NUMBER For example: Belt 1120L16 1120 (112.0" Nom. E.L.) L (Section) 16 (Ribs)					
Speed Ratio			1160 RPM DriveR		1750 RPM DriveR		3450 RPM DriveR		NOMINAL (STOCK & NON-STOCK) BELT EFF. LENGTHS - INCHES													
									50.0	54.0	56.0	61.5	63.5	65.5	67.5	69.5	72.5	76.5	78.0	79.5	81.5
									NOMINAL CENTER DISTANCE - INCHES												
2.81	3.20	9.00	412	1.11	622	1.54	1227	2.54	15.1	17.2	18.2	21.0	22.0	23.0	24.0	25.0	26.5	28.5	29.3	30.0	31.0
2.81	6.40	18.00	412	3.04	622	4.27	1227	6.86							13.3	14.4	16.0	18.2	19.0	19.7	20.8
2.86	4.20	12.00	405	1.73	611	5.43	1206	4.05	11.6	13.7	14.8	17.6	18.6	19.6	20.7	21.7	23.2	25.5	26.0	26.7	27.8
2.86	5.60	16.00	405	2.57	611	3.62	1206	5.93				12.7	13.8	14.9	15.9	17.0	18.6	20.6	21.4	22.2	23.2
2.86	7.00	20.00	405	3.38	611	4.74	1206	7.48										15.7	16.5	17.3	18.4
2.90	6.20	18.00	400	2.92	603	4.11	1189	6.63							13.5	14.6	16.2	18.3	19.1	19.9	20.9
2.92	4.80	14.00	397	2.09	599	2.94	1181	4.89		11.3	12.4	15.3	16.3	17.4	18.4	19.4	21.0	23.0	23.8	24.6	25.6
2.94	3.40	10.00	394	1.23	595	1.72	1173	2.85	14.1	16.1	17.2	20.0	21.0	22.0	23.0	24.0	25.5	27.5	28.3	29.0	30.0
2.96	5.40	16.00	391	2.45	591	3.45	1165	5.68				12.9	13.9	15.0	16.1	17.1	18.7	20.8	21.5	22.3	23.3
3.00	3.00	9.00	386	0.98	583	1.36	1150	2.22	15.3	17.3	18.3	21.1	22.1	23.1	24.1	25.2	26.7	28.7	29.4	30.2	31.2
3.00	4.00	12.00	386	1.61	583	2.25	1150	3.76	11.8	13.9	14.9	17.7	18.8	19.8	20.8	21.8	23.3	25.4	26.1	26.9	27.9
3.00	6.00	18.00	386	2.81	583	3.94	1150	6.41							13.6	14.7	16.3	18.4	19.2	20.0	21.1
3.00	8.00	24.00	386	3.94	583	5.51															
3.00	10.00	30.00	386	5.02	583	6.92															
3.04	4.60	14.00	381	1.97	575	2.77	1134	4.62		11.4	12.5	15.4	16.5	17.5	18.6	19.6	21.1	23.2	23.9	24.7	25.7
3.08	5.20	16.00	376	2.33	568	3.28	1120	5.42				1.0	14.0	15.1	16.2	17.3	18.8	20.9	21.7	22.5	23.5
3.10	5.80	18.00	374	2.69	564	3.78	1112	6.17							13.7	14.8	16.4	18.6	19.4	20.1	21.2
3.13	3.20	10.00	370	1.11	559	1.54	1102	2.54	14.2	16.3	17.3	20.1	21.1	22.1	23.1	24.1	25.7	27.7	28.4	29.2	30.2
3.13	6.40	20.00	370	3.04	559	4.27	1102	6.86										16.1	16.9	17.7	18.8
3.16	3.80	12.00	367	1.48	553	2.08	1091	3.46	11.9	14.0	15.0	17.9	18.9	19.9	20.9	22.0	23.5	25.5	26.3	27.0	28.0
3.18	4.40	14.00	364	1.85	550	2.60	1084	4.34		11.6	12.6	15.6	16.6	17.7	18.7	19.7	21.3	23.3	24.1	24.8	25.9
3.20	5.00	16.00	362	2.21	546	3.12	1078	5.16				13.1	14.2	15.3	16.3	17.4	19.0	21.0	21.8	22.6	23.6
3.21	5.60	18.00	361	2.57	545	3.62	1074	5.93							13.8	14.9	16.6	18.7	19.5	20.3	21.3
3.23	6.20	20.00	359	2.92	541	4.11	1068	6.64										16.2	17.0	17.8	18.9
3.24	7.40	24.00	358	3.61	540	5.05															
3.33	3.00	10.00	348	0.98	525	1.36	1036	2.22	14.4	16.4	17.4	20.2	21.3	22.3	23.3	24.3	25.8	27.8	28.6	29.3	30.3
3.33	3.60	12.00	348	1.36	525	1.90	1036	3.16	12.0	14.1	15.2	18.0	19.0	20.1	21.1	22.1	23.6	25.7	26.4	27.2	28.2
3.33	4.20	14.00	348	1.73	525	2.43	1036	4.05		11.7	12.8	15.7	16.7	17.8	18.8	19.9	21.4	23.5	24.2	25.0	26.0
3.33	4.80	16.00	348	2.09	525	2.95	1036	4.90				13.2	14.3	15.4	16.5	17.5	19.1	21.2	22.0	22.7	23.8
3.33	5.40	18.00	348	2.45	525	3.45	1036	5.68						12.8	14.0	15.1	16.7	18.8	19.6	20.4	21.5
3.33	6.00	20.00	348	2.81	525	3.95	1036	6.41									14.1	16.3	17.2	18.0	19.1
3.33	9.00	30.00	348	4.49	525	6.23															
3.43	7.00	24.00	338	3.38	510	4.74	1005	7.48													
3.45	5.80	20.00	336	2.69	507	3.78	1000	6.17									14.2	16.5	17.3	18.1	19.2
3.46	5.20	18.00	335	2.33	505	3.28	997	5.43						13.0	14.1	15.2	16.8	19.0	19.8	20.5	21.6
3.48	4.60	16.00	333	1.97	502	2.77	991	4.62				13.4	14.5	15.5	16.6	17.7	19.2	21.3	22.1	22.9	23.9
3.50	4.00	14.00	331	1.61	500	2.25	985	3.76		11.8	12.9	15.9	16.9	17.9	19.0	20.0	21.5	23.6	24.4	25.1	26.1
3.53	3.40	12.00	328	1.24	495	1.72	977	2.85	12.2	14.3	15.3	18.2	19.2	20.2	21.2	22.2	23.8	25.8	26.6	27.3	28.3
3.57	5.60	20.00	324	2.57	490	3.62	966	5.93									14.3	16.6	17.4	18.2	19.3
3.60	5.00	18.00	322	2.22	486	3.12	958	5.16						13.1	14.2	15.3	16.9	19.1	19.9	20.7	21.7
3.64	4.40	16.00	318	1.85	480	2.60	947	4.34				13.5	14.6	15.7	16.7	17.8	19.4	21.5	22.2	23.0	24.0
3.68	3.80	14.00	315	1.48	475	2.08	937	3.47		11.9	13.0	16.0	17.0	18.0	19.0	20.1	21.7	23.7	24.5	25.3	26.3
3.70	5.40	20.00	313	2.45	472	3.45	932	5.68									14.5	16.7	17.5	18.4	19.4
3.75	3.20	12.00	309	1.11	466	1.54	920	2.54	12.3	14.4	15.4	18.3	19.3	20.3	21.4	22.4	23.9	25.9	26.7	27.5	28.5
3.75	4.80	18.00	309	2.10	466	2.95	920	4.90						13.2	14.3	15.4	17.1	19.2	20.0	20.8	21.9
3.75	6.40	24.00	309	3.04	466	4.27	920	6.86													
3.75	8.00	30.00	309	3.94	466	5.51															
3.81	4.20	16.00	304	1.73	459	2.43	905	4.06				13.6	14.7	15.8	16.9	17.9	19.5	21.6	22.4	23.1	24.2
3.85	5.20	20.00	301	2.33	454	3.29	896	5.43									14.6	16.8	17.7	18.5	19.6
3.87	6.20	24.00	299	2.92	452	4.11	891	6.64													
3.89	3.60	14.00	298	1.36	449	1.90	886	3.16		12.1	13.2	16.1	17.1	18.2	19.2	20.3	21.8	23.9	24.6	25.4	26.4
3.91	4.60	18.00	296	1.97	447	2.78	882	4.62						13.3	14.5	15.6	17.2	19.3	20.1	20.9	22.0
4.00	3.00	12.00	290	0.98	437	1.36	862	2.22	12.4	14.5	15.6	18.4	19.5	20.5	21.5	22.5	24.1	26.1	26.8	27.6	28.6
4.00	4.00	16.00	290	1.61	437	2.25	862	3.76				13.7	14.8	15.9	17.0	18.1	19.6	21.7	22.5	23.3	24.3
4.00	5.00	20.00	290	2.22	437	3.12	862	5.17									14.7	17.0	17.8	18.6	19.7
4.00	6.00	24.00	290	2.81	437	2.95	862	6.41													
4.05	7.40	30.00	286	3.61	432	5.05															
4.09	4.40	18.00	283	1.85	427	2.60	843	4.34						13.4	14.6	15.7	17.3	19.5	20.3	21.1	22.1
4.12	3.40	14.00	281	1.24	424	1.72	837	2.86	9.9	12.2	13.3	16.2	17.3	18.3	19.4	20.4	22.0	24.0	24.8	25.5	26.6
4.14	5.80	24.00	280	2.69	422	3.78	833	6.18													
4.17	4.80	20.00	278	2.10	419	2.95	827	4.90									14.8	17.1	17.9	18.7	19.8
4.21	3.80	16.00	275	1.49	415	2.08	819	3.47				13.9	15.0	16.0	17.1	18.2	19.8	21.9	22.6	23.4	24.4
4.29	4.20	18.00	270	1.73	407	2.43	804	4.06					12.4	13.6	14.7	15.8	17.5	19.6	20.4	21.2	22.3
4.29	5.60	24.00	270	2.57	407	3.62	804	5.93													
4.29	7.00	30.00	270	3.38	407	4.74	804	7.48													
4.35	4.60	20.00	266	1.97	402	2.78	793	4.62									15.0	17.2	18.0	18.9	20.0
4.38	3.20	14.00	264	1.11	399	1.54	787	2.54	10.0	12.3	13.4	16.4	17.4	18.5	19.5	20.5	22.1	24.1	24.9	25.7	26.7
4.44	3.60	16.00	261	1.36	394	1.90	777	3.16				14.0	15.1	16.2	17.2	18.3	19.9	22.0	22.8	23.5	24.6
4.44	5.40	24.00	261	2.45	394	3.45	777	5.68													
4.50	4.00	18.00	257	1.61	388	2.25	766	3.76					12.5	13.7	14.8	15.9	17.6	19.7	20.5	21.3	22.4
4.55	4.40	20.00	254	1.85	384	2.60	758	4.34								13.3	15.1	17.3	18.2	19.0	20.1
4.62	5.20	24.00	251	2.34	378	3.29	746	5.43													
4.67	3.00	14.00	248	0.98	374	1.36	738	2.22	10.2	12.4	13.5	16.5	17.5	18.6	19.6	20.7	22.2	24.3	25.1	25.8	26.8
4.69	6.40	30.00	247	3.04	373	4.27	735	6.86													
4.71	3.40	16.00	246	1.24	371	1.72	732	2.86			11.0	14.1	15.2	16.3	17.4	18.4	20.0	22.1	22.9	23.7	24.7
4.74	3.80	18.00	244	1.49	369	2.08	727	3.47					12.6	13.8	15.0	16.1	17.7	19.9	20.7	21.5	22.5
4.76	4.20	20.00	243	1.73	367	2.43	724	4.06								13.4	15.2	17.5	18.3	19.1	20.2
4.80	5.00	24.00	241	2.22	364	3.12	718	5.17													
4.84	6.20	30.00	239	2.92	361	4.11	712	6.64													
5.00	3.20	16.00	232	1.11	350	1.54	690	2.54			11.1	14.2	15.3	16.4	17.5	18.6	20.2	22.3	23.0	23.8	24.9
ARC LENGTH FACTOR →									.80							.90					

L SPEED RATIO RANGE 2.81 - 5.00

Drive Grooves	6	8	10	12	14	16	20
Drive Belt Width	1.11"	1.48"	1.85"	2.22"	2.59"	2.96"	3.70"
Drive Diameter	←	3.0" to 30.0"	→	←	5.4" to 30.0"	→	

NOMINAL (STOCK & NON-STOCK) BELT EFF. LENGTHS - INCHES																			
84.0	86.5	91.5	97.5	99.0	106.5	112.0	115.0	121.5	123.0	129.5	131.0	145.5	159.5 *	165.0 *	176.0 *	182.0 *	198.0 *	212.0 *	240.0 *
NOMINAL CENTER DISTANCES - INCHES																			
32.3	33.5	36.1	39.1	39.8	43.6	46.3	47.8	51.1	51.8	55.1	55.8	63.1	70.1	72.9	78.4	81.4	89.4	96.4	110.4
22.1	23.4	25.9	29.0	29.8	33.6	36.4	37.9	41.2	41.9	45.2	46.0	53.3	60.3	63.1	68.6	71.6	79.6	86.7	100.7
29.0	30.3	32.8	35.8	36.6	40.3	43.1	44.6	47.9	48.6	51.9	52.6	59.9	66.9	69.7	75.2	78.2	86.2	93.2	107.2
24.5	25.8	28.3	31.4	32.1	35.9	38.7	40.2	43.5	44.2	47.5	48.3	55.6	62.6	65.3	70.9	73.9	81.9	88.9	102.9
19.7	21.1	23.7	26.8	27.5	31.4	34.2	35.7	39.0	39.8	43.1	43.8	51.1	58.2	61.0	66.5	69.5	77.5	84.6	98.6
22.2	23.5	26.1	29.2	29.9	33.7	36.5	38.0	41.3	42.1	45.4	46.1	53.4	60.5	63.2	68.7	71.8	79.8	86.8	100.8
26.8	28.1	30.6	33.7	34.4	38.2	41.0	42.5	45.8	46.5	49.8	50.5	57.8	64.8	67.6	73.1	76.1	84.1	91.1	105.1
31.3	32.6	35.1	38.1	38.8	42.6	45.4	46.9	50.1	50.9	54.1	54.9	62.1	69.2	71.9	77.4	80.4	88.4	95.4	109.4
24.6	25.9	28.5	31.5	32.3	36.1	38.8	40.4	43.6	44.4	47.7	48.4	55.7	62.7	65.5	71.0	74.0	82.0	89.0	103.1
32.4	33.7	36.2	39.2	40.0	43.7	46.5	48.0	51.2	52.0	55.2	56.0	63.3	70.3	73.0	78.5	81.5	89.5	96.5	110.5
29.2	30.4	32.9	36.0	36.7	40.5	43.3	44.8	48.0	48.8	52.0	52.8	60.1	67.1	69.8	75.3	78.3	86.3	93.4	107.4
22.4	23.6	26.2	29.3	30.1	33.9	36.7	38.2	41.5	42.2	45.5	46.3	53.6	60.6	63.4	68.9	71.9	79.9	87.0	101.0
		18.9	22.2	23.0	26.9	29.8	31.4	34.7	35.5	38.8	39.6	46.9	54.0	56.8	62.4	65.4	73.4	80.5	94.5
						22.4	24.0	27.5	28.3	31.8	32.6	40.1	47.3	50.1	55.7	58.7	66.9	73.9	88.0
27.0	28.3	30.8	33.8	34.6	38.4	41.1	42.6	45.9	46.7	49.9	50.7	58.0	65.0	67.7	73.2	76.3	84.3	91.3	105.3
24.8	26.0	28.6	31.6	32.4	36.2	39.0	40.5	43.8	44.5	47.8	48.6	55.8	62.9	65.6	71.2	74.2	82.2	89.2	103.2
22.5	23.8	26.4	29.4	30.2	34.0	36.8	38.3	41.6	42.4	45.7	46.4	53.7	60.8	63.5	69.0	72.1	80.1	87.1	101.1
31.5	32.7	35.2	38.2	39.0	42.8	45.5	47.0	50.3	51.0	54.3	55.0	52.3	69.3	72.1	77.6	80.6	88.6	95.6	109.6
20.1	21.4	24.1	27.2	27.9	31.8	34.6	36.1	39.4	40.2	43.5	44.3	51.6	58.6	61.4	66.9	69.9	78.0	85.0	99.0
29.3	30.6	33.1	36.1	36.9	40.6	43.4	44.9	48.2	48.9	52.2	52.9	60.2	67.2	70.0	75.5	78.5	86.5	93.5	107.5
27.1	28.4	30.9	34.0	34.7	38.5	41.3	42.8	46.1	46.8	50.1	50.8	58.1	65.1	67.9	73.4	76.4	84.4	91.4	105.4
24.9	26.2	28.7	31.8	32.6	36.3	39.1	40.6	43.9	44.7	47.9	48.7	56.0	63.0	65.8	71.3	74.3	82.3	89.3	103.4
22.6	23.9	26.5	29.6	30.3	34.2	37.0	38.5	41.8	42.5	45.8	46.6	53.9	60.9	63.7	69.2	72.2	80.2	87.3	101.3
20.3	21.6	24.2	27.3	28.1	31.9	34.7	36.3	39.6	40.3	43.6	44.4	51.7	58.8	61.5	67.1	70.1	78.1	85.2	99.2
		19.3	22.6	23.4	27.3	30.2	31.8	35.1	35.9	39.2	40.0	47.4	54.5	57.2	62.8	65.8	73.9	80.9	95.0
31.6	32.9	35.4	38.4	39.1	42.9	45.7	47.2	50.4	51.2	54.4	55.2	62.4	69.5	72.2	77.7	80.7	88.7	95.7	109.7
29.5	30.7	33.2	36.3	37.0	40.8	43.6	45.1	48.3	49.1	52.3	53.1	60.4	67.4	70.1	75.6	78.6	86.7	93.7	107.7
27.3	28.5	31.1	34.1	34.9	38.7	41.4	42.9	46.2	47.0	50.2	51.0	58.3	65.3	68.0	73.5	76.6	84.6	91.6	105.6
25.0	26.3	28.9	31.9	32.7	36.5	39.3	40.8	44.1	44.8	48.1	48.9	56.1	63.2	65.9	71.5	74.5	82.5	89.5	103.5
22.8	24.1	26.6	29.7	30.5	34.3	37.1	38.6	41.9	42.7	45.9	46.7	54.0	61.1	63.8	69.3	72.4	80.4	87.4	101.4
20.4	21.7	24.3	27.4	28.2	32.1	34.9	36.4	39.7	40.5	43.8	44.5	51.9	58.9	61.7	67.2	70.2	78.3	85.3	99.3
						23.0	24.6	28.2	29.0	32.4	33.2	40.8	48.0	50.8	56.4	59.5	67.6	74.6	88.6
	16.8	19.6	22.8	23.6	27.6	30.5	32.0	35.4	36.2	39.5	40.3	47.7	54.8	57.5	63.1	66.1	74.2	81.2	95.3
20.5	21.8	24.5	27.6	28.4	32.2	35.0	36.6	39.9	40.6	43.9	44.7	52.0	59.1	61.8	67.4	70.4	78.4	85.5	99.5
22.9	24.2	26.8	29.9	30.6	34.4	37.2	38.8	42.1	42.8	46.1	46.9	54.2	61.2	64.0	69.5	72.5	80.5	87.6	101.6
25.2	26.5	29.0	32.1	32.8	36.6	39.4	40.9	44.2	45.0	48.2	49.0	56.3	63.3	66.1	71.6	74.6	82.6	89.6	103.7
27.4	28.7	31.2	34.3	35.0	38.8	41.6	43.1	46.4	47.1	50.4	51.1	58.4	65.4	68.2	73.7	76.7	84.7	91.7	105.8
29.6	30.9	33.4	36.4	37.2	40.9	43.7	45.2	48.5	49.2	52.5	53.2	60.5	67.5	70.3	75.8	78.8	86.8	93.8	107.8
20.6	22.0	24.6	27.7	28.5	32.4	35.2	36.7	40.0	40.8	44.1	44.8	52.2	59.2	62.0	67.5	70.5	78.6	85.6	99.6
23.0	24.3	26.9	30.0	30.8	34.6	37.4	68.9	42.2	43.0	46.2	47.0	54.3	61.4	64.1	69.6	72.7	80.7	87.7	101.7
25.3	26.6	29.2	32.2	33.0	36.8	39.6	41.4	44.4	45.1	48.4	49.1	56.4	63.5	66.2	71.8	74.8	82.8	89.8	103.8
27.6	28.8	31.4	34.4	35.2	38.9	41.7	43.2	46.5	47.3	50.5	51.3	58.6	65.6	68.3	73.9	76.9	84.9	91.9	105.9
20.8	22.1	24.7	27.9	28.6	32.5	35.3	36.8	40.1	40.9	44.2	45.0	52.3	59.4	62.1	67.7	70.7	78.7	85.8	99.8
29.7	31.0	33.5	36.6	37.3	41.1	43.8	45.4	48.6	49.4	52.6	53.4	60.7	67.7	70.4	75.9	78.9	87.0	94.0	108.0
23.2	24.5	27.0	30.1	30.9	34.7	37.5	39.0	42.3	43.1	46.4	47.1	54.5	61.5	64.3	69.8	72.8	80.8	87.9	101.9
	17.1	19.9	23.2	24.0	28.0	30.9	32.4	35.8	36.6	39.9	40.7	48.1	55.2	58.0	63.5	66.6	74.6	81.7	95.7
					20.5	23.6	25.3	28.8	29.6	33.1	33.9	41.5	48.7	51.5	57.1	60.2	68.3	75.4	89.5
25.5	26.7	29.3	32.4	33.1	36.9	39.7	41.2	44.5	45.3	48.5	49.3	56.6	63.6	66.4	71.9	74.9	82.9	89.9	104.0
20.9	22.2	24.9	28.0	28.8	32.6	35.4	37.0	40.3	41.1	44.4	45.1	52.4	59.5	62.3	67.8	70.8	78.9	85.9	99.9
	17.2	20.1	23.3	24.2	28.1	31.0	32.6	35.9	36.7	40.1	40.8	48.2	55.3	58.1	53.7	66.7	74.8	81.8	95.9
27.7	29.0	31.5	34.5	35.3	39.1	41.9	43.4	46.6	47.4	50.7	51.4	58.7	65.7	68.5	74.0	77.0	85.0	92.0	106.1
23.3	24.6	27.2	30.3	31.0	34.9	37.7	39.2	42.5	43.2	46.5	47.3	54.6	61.6	64.4	69.9	73.0	81.0	88.0	102.0
29.9	31.1	33.7	36.7	37.5	41.2	44.0	45.5	48.8	49.5	52.8	53.5	60.8	67.8	70.6	76.1	79.1	87.1	94.1	108.1
25.6	26.9	29.4	32.5	33.3	37.1	39.8	41.4	44.6	45.4	48.7	49.4	56.7	63.8	66.5	72.1	75.1	83.1	90.1	104.1
21.0	22.4	25.0	28.1	28.9	32.8	35.6	37.1	40.4	41.2	44.5	45.3	52.6	59.7	62.4	68.0	71.0	79.0	86.0	100.1
	17.4	20.2	23.5	24.3	28.3	31.1	32.7	36.1	36.9	40.2	41.0	48.4	55.5	58.3	63.8	66.8	74.9	82.0	96.0
					20.8	24.0	25.7	29.2	30.0	33.5	34.3	41.9	49.1	51.9	57.5	60.6	68.7	75.8	89.9
23.4	24.7	27.3	30.4	31.2	35.0	37.8	39.3	42.6	43.4	46.7	47.4	54.7	61.8	64.6	70.1	73.1	81.1	88.2	102.2
27.8	29.1	31.6	34.7	35.4	39.2	42.0	43.5	46.8	47.5	50.8	51.6	58.9	65.9	68.6	74.2	77.2	85.2	92.2	106.2
16.0	17.5	20.3	23.6	24.4	28.4	31.3	32.8	36.2	37.0	40.3	41.1	48.5	55.6	58.4	64.0	67.0	75.1	82.1	96.2
21.2	22.5	25.1	28.3	29.0	32.9	35.7	37.3	40.6	41.3	44.6	45.4	52.7	59.8	62.6	68.1	71.1	79.2	86.2	100.2
25.7	27.0	29.6	32.6	33.4	37.2	40.0	41.5	44.8	45.5	48.8	49.6	56.9	63.9	66.7	72.2	75.2	83.2	90.3	104.3
23.6	24.9	27.5	30.5	31.3	35.1	37.9	39.5	42.8	43.5	46.8	47.6	54.9	61.9	64.7	70.2	73.2	81.3	88.3	102.3
16.1	17.6	20.4	23.7	24.5	28.5	31.4	33.0	36.3	37.1	40.5	41.2	48.6	55.8	58.5	64.1	67.1	75.2	82.2	96.3
					21.1	24.2	25.9	29.5	30.3	33.7	34.5	42.1	49.4	52.2	57.8	60.9	69.0	76.1	90.2
21.3	22.6	25.3	28.4	29.2	33.0	35.9	37.4	40.7	41.5	44.8	45.5	52.9	59.9	62.7	68.3	71.3	79.3	86.3	100.4
28.0	29.2	31.8	34.8	35.6	39.4	42.2	43.7	46.9	47.7	51.0	51.7	59.0	66.0	68.8	74.3	77.3	85.3	92.3	106.4
25.9	27.2	29.7	32.8	33.5	37.3	40.1	41.7	44.9	45.7	49.0	49.7	57.0	64.1	66.8	72.3	75.4	83.4	90.4	104.4
16.3	17.7	20.6	23.9	24.7	28.7	31.6	33.1	36.5	37.3	40.6	41.4	48.8	55.9	58.7	64.2	67.3	75.3	82.4	96.5
23.7	25.0	27.6	30.7	31.5	35.3	38.1	39.6	42.9	43.7	47.0	47.7	55.0	62.1	64.9	70.4	73.4	81.4	88.5	102.5
21.4	22.8	25.4	28.5	29.3	33.2	36.0	37.5	40.9	41.6	44.9	45.7	53.0	60.1	62.9	68.4	71.4	79.5	86.5	100.5
16.4	17.9	20.7	24.0	24.8	28.8	31.7	33.2	36.6	37.4	40.7	41.5	48.9	56.0	58.8	64.4	67.4	75.5	82.5	96.6
28.1	29.4	31.9	35.0	35.7	39.5	42.3	43.8	47.1	47.8	51.1	51.9	59.1	66.2	68.9	74.5	77.5	85.5	92.5	106.5
					21.4	24.6	26.3	29.8	30.7	34.1	34.9	42.5	49.8	52.6	58.2	61.3	69.4	76.5	90.7
26.0	27.3	29.9	32.9	33.7	37.5	40.3	41.8	45.1	45.8	49.1	49.9	57.2	64.2	67.0	72.5	75.5	83.5	90.6	104.6
23.8	25.1	27.7	30.8	31.6	35.4	38.2	39.8	43.1	43.8	47.1	47.9	55.2	62.2	65.0	70.5	73.5	81.6	88.6	102.6
21.6	22.9	25.5	28.7	29.4	33.3	36.1	37.7	41.0	41.8	45.1	45.8	53.2	60.2	63.0	68.5	71.6	79.6	86.6	100.7
16.5	18.0	20.8	24.1	24.9	28.9	31.8	33.4	36.8	37.5	40.9	41.7	49.1	56.2	59.0	64.5	67.6	75.6	82.7	96.8
					21.5	24.7	26.4	30.0	30.8	34.3	35.1	42.7	49.9	52.7	58.4	61.4	69.6	76.7	90.8
26.1	27.4	30.0	33.1	33.8	37.6	40.0	41.9	45.2	46.0	49.3	50.0	57.3	64.4	67.1	72.6	75.7	83.7	90.7	104.7
			.90							1.00						1.08			1.15

* = Non-Standard Lengths

L DRIVE SELECTION TABLES

	SHEAVES Outside Diameters		DRIVEN RPM AND HORSEPOWER PER RIB						How to specify SHEAVE PART NUMBER For Example: Sheave 16L46 16 (Grooves) L (Section) 46 (4.6" O.D.)	How to specify BELT PART NUMBER For example: Belt 1120L16 1120 (112.0" Nom. E.L.) L (Section) 16 (Ribs)											
Speed Ratio			1160 RPM DriveR		1750 RPM DriveR		3450 RPM DriveR		NOMINAL (STOCK & NON-STOCK) BELT EFF. LENGTHS - INCHES												
									50.0	54.0	56.0	61.5	63.5	65.5	67.5	69.5	72.5	76.5	78.0	79.5	81.5
									NOMINAL CENTER DISTANCE - INCHES												
5.00	3.60	18.00	232	1.36	350	1.90	690	3.16					12.8	13.9	15.1	16.2	17.8	20.0	20.8	21.6	22.6
5.00	4.00	20.00	232	1.61	350	2.25	690	3.77								13.5	15.3	17.6	18.4	19.2	20.3
5.00	4.80	24.00	232	2.10	350	2.95	690	4.90													
5.00	6.00	30.00	232	2.81	350	3.95	690	6.41													
5.17	5.80	30.00	224	2.69	338	3.78	667	6.18													
5.22	4.60	24.00	222	1.98	335	2.78	660	4.62													
5.26	3.80	20.00	220	1.49	332	2.08	655	3.47								13.7	15.4	17.7	18.5	19.4	20.5
5.29	3.40	18.00	219	1.24	330	1.72	652	2.86					12.9	14.4	15.2	16.3	18.0	20.1	20.9	21.7	22.8
5.33	3.00	16.00	217	0.98	328	1.36	647	2.22			11.2	14.4	15.5	16.6	17.6	18.7	20.3	22.4	23.2	24.0	25.0
5.36	5.60	30.00	216	2.57	326	3.62	643	5.93													
5.45	4.40	24.00	212	1.85	321	2.60	633	4.34													15.3
5.56	3.60	20.00	208	1.36	314	1.90	620	3.17								13.8	15.6	17.8	18.7	19.5	20.6
5.56	5.40	30.00	208	2.45	314	3.45	620	5.69													
5.63	3.20	18.00	206	1.11	310	1.54	612	2.54				11.8	13.0	14.2	15.3	16.4	18.1	20.3	21.1	21.9	22.9
5.71	4.20	24.00	203	1.73	306	2.43	604	4.06													15.4
5.77	5.20	30.00	201	2.34	303	3.29	597	5.43													
5.88	3.40	20.00	197	1.24	297	1.72	586	2.86								13.9	15.7	18.0	18.8	19.6	20.7
6.00	3.00	18.00	193	0.98	291	1.36	575	2.22				11.9	13.1	14.3	15.4	16.6	18.2	20.4	21.2	22.0	23.0
6.00	4.00	24.00	193	1.61	291	2.25	575	3.77													
6.00	5.00	30.00	193	2.22	291	3.12	575	5.17													
6.25	3.20	20.00	185	1.11	280	1.54	552	2.54							12.8	14.0	15.8	18.1	18.9	19.8	20.8
6.25	4.80	30.00	1.85	2.10	280	2.95	552	4.90													
6.32	3.80	24.00	183	1.49	276	2.08	545	3.47													15.7
6.52	4.60	30.00	177	1.98	268	2.78	529	4.62													
6.67	3.00	20.00	173	0.98	262	1.36	517	2.23							12.9	14.4	15.9	18.2	19.0	19.9	21.0
6.67	3.60	24.00	173	1.36	262	1.90	517	3.17													15.8
6.82	4.40	30.00	170	1.85	256	2.60	505	4.34													
7.06	3.40	24.00	164	1.24	247	1.72	488	2.86													15.9
7.14	4.20	30.00	162	1.73	245	2.43	483	4.06													
7.50	3.20	24.00	154	1.11	233	1.54	460	2.54												14.7	16.0
7.50	4.00	30.00	154	1.61	233	2.26	460	3.77													
7.90	3.80	30.00	146	1.49	221	2.08	436	3.47													
8.00	3.00	24.00	145	0.98	218	1.36	431	2.23												14.8	16.1
8.33	3.60	30.00	139	1.36	210	1.90	414	3.17													
8.82	3.40	30.00	131	1.24	198	1.72	391	2.86													
9.38	3.20	30.00	123	1.11	186	1.54	367	2.54													
10.00	3.00	30.00	116	0.98	175	1.36	345	2.23													
ARC LENGTH FACTOR →									.70											.80	

MULE DRIVES

Mule drives may be defined as those drives in which the shafts may be at right angles to each other and in the same plane as shown below. It is necessary in this type of drive to provide two idlers to accomplish the belt bend and twist as shown.

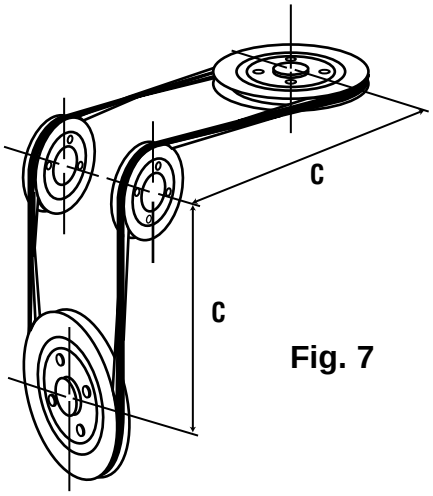

Fig. 7

The most critical feature of a Mule drive is the alignment of the sheaves and idlers. The sheaves and idlers must be aligned so that the belt enters and leaves each sheave and idler at right angles to the sheave face. Where necessary, however, the belt may leave a sheave at more or less than a right angle. Ordinary alignment methods commonly used with other drives are adequate. In Mule drives the minimum center distance (C) from sheave to idler is equal to:

1½ per Rib for "J" section
3" per Rib for "L" section
6" per Rib for "M" section

IDLERS

Idler sheaves or pulleys may be used in the following instances:

1. To provide take-up on fixed center drives.
2. To increase wrap of the belt around the smaller sheave.
3. To guide the belt around obstructions or to improve alignment.
4. To dampen vibration.
5. To act as a clutch.
6. To provide automatic tension control.

Outside or Reverse Bend Idlers — When used with Vee-Rib belts a reverse bend or outside idler should be flat (NO crown) and of the following outside diameters:

Vee-Rib "J" Section	Minimum 2.0" O.D.	Vee-Rib "L" Section	Minimum 6.0" O.D.
	Vee-Rib "M" Section	Minimum 12.0" O.D.	

Outside idlers increase the arc of contact as the belt stretches in service. Bear in mind, however, that the amount of take-up that can be obtained through the use of an Outside Idler is limited.

L SPEED RATIO RANGE 5.00 - 10.00

Drive Grooves	6	8	10	12	14	16	20
Drive Belt Width	1.11"	1.48"	1.85"	2.22"	2.59"	2.96"	3.70"
Drive Diameter	←	3.0" to 30.0"	→	←	5.4" to 30.0"	→	

NOMINAL (STOCK & NON-STOCK) BELT EFF. LENGTHS - INCHES																			
84.0	86.5	91.5	97.5	99.0	106.5	112.0	115.0	121.5	123.0	129.5	131.0	145.5	159.5 *	165.0 *	176.0 *	182.0 *	198.0 *	212.0 *	240.0 *
NOMINAL CENTER DISTANCES - INCHES																			
24.0	25.3	27.9	31.7	31.0	35.6	38.4	39.9	43.2	44.0	47.2	48.0	53.3	62.4	65.1	70.7	73.7	81.7	88.8	102.8
21.7	23.0	25.7	28.8	29.6	33.5	36.3	37.8	41.1	41.9	45.2	46.0	53.3	60.4	63.2	68.7	71.7	79.8	86.8	100.8
16.6	18.1	20.9	24.2	25.1	29.1	31.9	33.5	36.9	37.7	41.0	41.8	49.2	56.3	59.1	64.7	67.7	75.8	82.8	96.9
					21.7	24.8	26.5	30.1	30.9	34.4	35.2	42.8	50.1	52.9	58.5	61.6	69.7	76.8	90.9
					21.8	25.0	26.7	30.2	31.0	34.5	35.3	42.9	50.2	53.0	58.6	61.7	69.8	76.9	91.1
16.7	18.2	21.1	24.4	25.2	29.2	32.1	33.7	37.0	37.8	41.2	41.9	49.3	56.5	59.3	64.8	67.9	75.9	83.0	97.1
21.8	23.1	25.8	28.9	29.7	33.6	36.4	38.0	41.3	42.0	45.3	46.1	53.5	60.5	63.3	68.8	71.9	79.9	86.9	101.0
24.1	25.4	28.0	31.1	31.9	35.7	38.5	40.0	43.3	44.1	47.4	48.1	55.5	62.5	65.3	70.8	73.8	81.9	88.9	102.9
26.3	27.6	30.1	33.2	34.0	37.8	40.6	42.1	45.4	46.1	49.4	50.2	57.5	64.5	67.3	72.8	75.8	83.8	90.9	104.9
					21.9	25.1	26.8	30.4	31.2	34.7	35.5	43.1	50.3	53.2	58.8	61.9	70.0	77.1	91.2
16.9	18.3	21.2	24.5	25.3	29.3	32.2	33.8	37.2	37.9	41.3	42.1	49.5	56.6	59.4	65.0	68.0	76.1	83.1	97.2
21.9	23.3	25.9	29.1	29.8	33.7	36.6	38.1	41.4	42.2	45.5	46.2	53.6	60.7	63.4	69.0	72.0	80.1	87.1	101.1
					22.0	25.5	26.9	30.5	31.3	34.8	35.6	43.2	50.5	53.3	58.9	62.0	70.1	77.2	91.4
24.2	25.5	28.1	31.2	32.0	35.8	38.6	40.2	43.5	44.2	47.5	48.3	55.6	62.7	65.4	71.0	74.0	82.0	89.1	103.1
17.0	18.5	21.3	24.6	25.4	29.4	32.3	33.9	37.3	38.1	41.4	42.2	49.6	56.7	59.5	65.1	68.1	76.2	83.3	97.4
					22.1	25.3	27.0	30.6	31.4	34.9	35.7	43.3	50.6	53.4	59.1	62.1	70.3	77.4	91.5
22.1	23.4	26.1	29.2	30.0	33.9	36.7	38.2	41.6	42.3	45.6	46.4	53.7	60.8	63.6	69.1	72.2	80.2	87.2	101.3
24.4	25.7	28.3	31.4	32.1	36.0	38.8	40.3	43.6	44.4	47.7	48.4	55.8	62.8	65.6	71.1	74.1	82.2	89.2	103.2
17.1	18.6	21.4	24.7	25.6	29.6	32.5	34.1	37.4	38.2	41.6	42.3	49.8	56.9	59.7	65.3	68.3	76.4	83.4	97.5
					22.3	25.5	27.1	30.7	31.5	35.0	35.8	43.5	50.7	53.6	59.2	62.3	70.4	77.5	91.7
22.2	23.5	26.2	29.3	30.1	34.0	36.8	38.4	41.7	42.5	45.8	46.5	53.9	61.0	63.7	69.3	72.3	80.3	87.4	101.4
					22.4	25.6	27.3	30.9	31.7	35.2	36.0	43.6	50.9	53.7	59.8	62.4	70.6	77.7	91.8
17.2	18.7	21.6	24.9	25.7	29.7	32.6	34.2	37.6	38.3	41.7	42.5	49.9	57.0	59.8	65.4	68.4	76.5	83.6	97.7
					22.5	25.7	27.4	31.0	31.8	35.3	36.1	43.7	51.0	53.8	59.5	62.5	70.7	77.8	92.0
22.3	23.7	26.3	29.5	30.3	34.1	37.0	38.5	41.8	42.6	45.9	46.7	54.0	61.1	63.9	69.4	72.4	80.5	87.5	101.6
17.3	18.8	21.7	25.0	25.8	29.8	32.7	34.3	37.7	38.5	41.8	42.6	50.0	57.2	60.0	65.5	68.6	76.7	83.7	97.8
					22.6	25.8	27.5	31.1	31.9	35.4	36.2	43.9	51.1	54.0	59.6	62.7	70.8	77.9	92.1
17.5	18.9	21.8	25.1	25.9	30.0	32.9	34.5	37.8	38.6	42.0	42.8	50.2	57.3	60.1	65.7	68.7	76.8	83.9	97.9
					22.7	25.9	27.6	31.2	32.1	35.6	36.4	44.0	51.3	54.1	59.8	62.8	71.0	78.1	92.3
17.6	19.1	21.9	25.3	26.1	30.1	33.0	34.6	38.0	38.8	42.1	42.9	50.3	57.5	60.3	65.8	68.9	76.9	84.0	98.1
				18.2	22.9	26.1	27.8	31.4	32.2	35.7	36.5	44.1	51.4	54.3	59.9	63.0	71.1	78.2	92.4
				18.3	23.0	26.2	27.9	31.5	32.3	35.8	36.6	44.3	51.6	54.4	60.0	63.1	71.3	78.4	92.5
17.7	19.2	22.1	25.4	26.2	30.2	33.1	34.7	38.1	38.9	42.3	43.0	50.5	57.6	60.4	66.0	69.0	77.1	84.1	98.2
				18.4	23.1	26.3	28.0	31.6	32.4	36.0	36.8	44.4	51.7	54.5	60.2	63.2	71.4	78.5	92.7
				18.5	23.2	26.4	28.1	31.7	32.6	36.1	36.9	44.5	51.8	54.7	60.3	63.4	71.5	78.7	92.8
				18.6	23.3	26.6	28.3	31.9	32.7	36.2	37.0	44.7	52.0	54.8	60.5	63.5	71.7	78.8	93.0
			17.7	18.7	23.5	26.7	28.4	32.0	32.8	36.3	37.1	44.8	52.1	54.9	60.6	63.7	71.8	78.9	93.1
		.80					.90					1.00					1.08		1.15

Inside Idlers — When used with Vee-Rib Belts an inside idler should have the same groove profile as the driveR and driveN sheaves and the following minimum pitch diameters:

Vee-Rib “J” Section	Minimum 1.5” P.D.
Vee-Rib “L” Section	Minimum 3.0” P.D.
Vee-Rib “M” Section	Minimum 7.0” P.D.

Inside idlers decrease the arc of contact as the belt stretches in service.

In view of the fact that any idler, especially reverse bend idlers, may reduce the belt life in service, it is recommended that idler diameters be made as large as practical — particularly where maximum belt life is of prime consideration.

Fig. 8

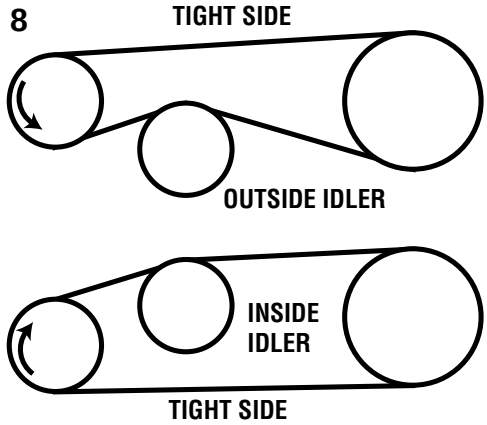

Idlers of any kind should be located on the slack side of the drive near the point where the belt leaves the driveR sheave. If the idler must be on the tight side or pulling side of the drive, locate this idler near the point where the belt leaves the driveN sheave.

Flanged idlers are recommended only where the belt is expected to become loose during the drive cycle such as in idler slip clutch drives or where the centers change substantially during the drive cycle (i.e., — some vibrating screens, car shakeouts, etc.).

Proper alignment and firmness of support of idlers are necessary to prevent the belt from jumping the sheave grooves.

Tension control by means of a damped spring, weighted or air cylinder operated idler is recommended as a means of achieving maximum drive stability (freedom from slip variation with load changes).

It is recommended that in any application where an idler is being used for take-up that the drive be carefully laid out to scale to determine if there is sufficient idler movement available for the required take-up.

M DRIVE SELECTION TABLES

	SHEAVES Outside Diameters		DRIVEN RPM AND HORSEPOWER PER RIB						How to specify SHEAVE PART NUMBER For example: Sheave 20M140 20 (Grooves) M (Section) 140 (1.40" O.D.)					How to specify BELT PART NUMBER For example: Belt 1650M20 1650 (165.0" Nom E.L.) M (Section) 20 (Ribs)				
Speed Ratio	DriveR	DriveN	870 RPM DriveR		1160 RPM DriveR		1750 RPM DriveR		NOMINAL (STOCK & NON-STOCK) BELT STANDARD EFF. LENGTHS - INCHES									
			RPM	HP	RPM	HP	RPM	HP	90.0	94.0	99.0	106.0	111.5	115.0	118.5	123.0	131.0	139.0
									NOMINAL CENTER DISTANCE - INCHES									
1.00	7.00	7.00	870	5.27	1160	6.54	1750	8.61	34.0	36.0	38.5	42.0	44.8	46.5	48.3	50.5	54.5	58.5
1.00	7.40	7.40	870	5.85	1160	7.27	1750	9.59	33.4	35.4	37.9	41.4	44.1	45.9	47.6	49.9	53.9	57.9
1.00	7.60	7.60	870	6.14	1160	7.63	1750	10.1	33.1	35.1	37.6	41.1	43.8	45.6	47.3	49.6	53.6	57.6
1.00	8.00	8.00	870	6.71	1160	8.35	1750	11.0	32.4	34.4	36.9	40.4	43.2	44.9	46.7	48.9	52.9	56.9
1.00	8.40	8.40	870	7.27	1160	9.06	1750	12.0	31.8	33.8	36.3	39.8	42.6	44.3	46.1	48.3	52.3	56.3
1.00	8.60	8.60	870	7.55	1160	9.41	1750	12.4	31.5	33.5	36.0	39.5	42.2	44.0	45.7	48.0	52.0	56.0
1.00	9.00	9.00	870	8.11	1160	10.1	1750	13.3	30.9	32.9	35.4	38.9	41.6	43.4	45.1	47.4	51.4	55.4
1.00	9.20	9.20	870	8.39	1160	10.5	1750	13.8	30.6	32.6	35.1	38.6	41.3	43.1	44.8	47.1	51.1	55.1
1.00	9.60	9.60	870	8.94	1160	11.1	1750	14.6	29.9	31.9	34.4	37.9	40.7	42.4	44.2	46.4	50.4	54.4
1.00	10.00	10.00	870	9.49	1160	11.8	1750	15.5	29.3	31.3	33.8	37.3	40.0	41.8	43.5	45.8	49.8	53.8
1.00	10.60	10.60	870	10.3	1160	12.8	1750	16.7	28.4	30.4	32.9	36.4	39.1	40.9	42.6	44.9	48.9	52.9
1.00	11.00	11.00	870	10.8	1160	13.5	1750	17.5	27.7	29.7	32.2	35.7	38.5	40.2	42.0	44.2	48.2	52.2
1.00	12.00	12.00	870	12.2	1160	15.1	1750	19.3	26.2	28.2	30.7	34.2	36.9	38.7	40.4	42.7	46.7	50.7
1.00	13.00	13.00	870	13.4	1160	16.6	1750	21.0	24.6	26.6	29.1	32.6	35.3	37.1	38.8	41.1	45.1	49.1
1.00	14.00	14.00	870	14.7	1160	18.1	1750	22.5	23.0	25.0	27.5	31.0	33.8	35.5	37.3	39.5	43.5	47.5
1.00	15.00	15.00	870	15.9	1160	19.5			21.4	23.4	25.9	29.4	32.2	33.9	35.7	37.9	41.9	45.9
1.00	16.00	16.00	870	17.1	1160	20.9			19.9	21.9	24.4	27.9	30.6	32.4	34.1	36.4	40.4	44.4
1.00	18.00	18.00	870	19.4	1160	23.4					21.2	24.7	27.5	29.2	31.0	33.2	37.2	41.2
1.02	8.40	8.60	852	7.33	1137	9.14	1715	12.1	31.7	33.7	36.2	39.7	42.4	44.2	45.9	48.2	52.2	56.2
1.02	9.00	9.20	852	8.17	1137	10.2	1715	13.4	30.7	32.7	35.2	38.7	41.5	43.2	45.0	47.2	51.2	55.2
1.03	7.40	7.60	844	5.94	1126	7.39	1699	9.77	33.2	35.2	37.7	41.2	44.0	45.7	47.5	49.7	53.7	57.7
1.04	9.20	9.60	836	8.50	1115	10.6	1682	14.0	30.2	32.2	34.7	38.2	41.0	42.7	44.5	46.7	50.7	54.7
1.04	9.60	10.00	836	9.05	1115	11.3	1682	14.9	29.6	31.6	34.1	37.6	40.4	42.1	43.9	46.1	50.1	54.1
1.04	10.60	11.00	836	10.4	1115	13.0	1682	16.9	28.0	30.0	32.5	36.0	38.8	40.5	42.3	44.5	48.5	52.5
1.05	7.60	8.00	828	6.28	1104	7.82	1666	10.4	32.8	34.8	37.3	40.8	43.5	45.3	47.0	49.3	53.3	57.3
1.05	8.00	8.40	828	6.85	1104	8.54	1666	11.3	32.1	34.1	36.6	40.1	42.9	44.6	46.4	48.6	52.6	56.6
1.05	8.60	9.00	828	7.69	1104	9.60	1666	12.7	31.2	33.2	35.7	39.2	41.9	43.7	45.4	47.7	51.7	55.7
1.06	7.00	7.40	820	5.44	1094	6.76	1650	8.94	33.7	35.7	38.2	41.7	44.4	46.2	47.9	50.2	54.2	58.2
1.06	10.00	10.60	820	9.65	1094	12.0	1650	15.8	28.8	30.8	33.3	36.8	39.6	41.3	43.1	45.3	49.3	53.3
1.07	8.40	9.00	813	7.46	1084	9.31	1635	12.3	31.3	33.3	35.8	39.3	42.1	43.8	45.6	47.8	51.8	55.8
1.07	8.60	9.20	813	7.74	1084	9.67	1635	12.8	31.0	33.0	35.5	39.0	41.8	43.5	45.3	47.5	51.5	55.5
1.07	9.00	9.60	813	8.30	1084	10.4	1635	13.7	30.4	32.4	34.9	38.4	41.1	42.9	44.6	46.9	50.9	54.9
1.07	14.00	15.00	813	14.9	1084	18.4	1635	22.8	22.2	24.2	26.7	30.2	33.0	34.7	36.5	38.7	42.7	46.7
1.07	15.00	16.00	813	16.1	1084	19.8			20.7	22.7	25.2	28.7	31.4	33.2	34.9	37.2	41.2	45.2
1.08	7.40	8.00	805	6.06	1074	7.55	1620	10.0	32.9	34.9	37.4	40.9	43.7	45.4	47.2	49.4	53.4	57.4
1.08	8.00	8.60	805	6.92	1074	8.63	1620	11.5	32.0	34.0	36.5	40.0	42.7	44.5	46.2	48.5	52.5	56.5
1.08	12.00	13.00	805	12.4	1074	15.4	1620	19.7	25.4	27.4	29.9	33.4	36.1	37.9	39.6	41.9	45.9	49.9
1.08	13.00	14.00	805	13.7	1074	16.9	1620	21.4	23.8	25.8	28.3	31.8	34.6	36.3	38.1	40.3	44.3	48.3
1.09	7.00	7.60	798	5.50	1064	6.84	1605	9.07	33.5	35.5	38.0	41.5	44.3	46.0	47.8	50.0	54.0	58.0
1.09	9.20	10.00	798	8.62	1064	10.8	1605	14.2	29.9	31.9	34.4	37.9	40.7	42.4	44.2	46.4	50.4	54.4
1.09	11.00	12.00	798	11.1	1064	13.8	1605	17.9	26.9	28.9	31.4	34.9	37.7	39.4	41.2	43.4	47.4	51.4
1.10	8.40	9.20	790	7.52	1054	9.40	1590	12.5	31.2	33.2	35.7	39.2	41.9	43.7	45.4	47.7	51.7	55.7
1.10	9.60	10.60	790	9.19	1054	11.5	1590	15.1	29.1	31.1	33.6	37.1	39.9	41.6	43.4	45.6	49.6	53.6
1.10	10.00	11.00	790	9.74	1054	12.2	1590	16.0	28.5	30.5	33.0	36.5	39.3	41.0	42.8	45.0	49.0	53.0
1.11	7.60	8.40	783	6.41	1045	7.99	1576	10.6	32.4	34.4	36.9	40.4	43.2	44.9	46.7	48.9	52.9	56.9
1.11	9.00	10.00	783	8.38	1045	10.5	1576	13.9	30.1	32.1	34.6	38.1	40.8	42.6	44.3	46.6	50.6	54.6
1.11	18.00	20.00	783	19.7	1045	23.7						23.1	25.9	27.7	29.4	31.7	35.7	39.7
1.12	8.60	9.60	776	7.84	1035	9.80	1562	13.0	30.7	32.7	35.2	38.7	41.5	43.2	45.0	47.2	51.2	55.2
1.13	7.60	8.60	769	6.44	1026	8.04	1548	10.7	32.3	34.3	36.8	40.3	43.0	44.8	46.5	48.8	52.8	56.8
1.13	8.00	9.00	769	7.01	1026	8.76	1548	11.7	31.7	33.7	36.2	39.7	42.4	44.2	45.9	48.2	52.2	56.2
1.13	10.60	12.00	769	10.6	1026	13.2	1548	17.3	27.3	29.3	31.8	35.3	38.0	39.8	41.5	43.8	47.8	51.8
1.13	16.00	18.00	769	17.4	1026	21.3			18.3	20.3	22.8	26.3	29.0	30.8	32.5	34.8	38.8	42.8
1.14	7.00	8.00	763	5.60	1017	6.97	1535	9.26	33.2	35.2	37.7	41.2	44.0	45.7	47.5	49.7	53.7	57.7
1.14	7.40	8.40	763	6.17	1017	7.70	1535	10.2	32.6	34.6	37.1	40.6	43.3	45.1	46.8	49.1	53.1	57.1
1.14	8.40	9.60	763	7.60	1017	9.49	1535	12.6	30.9	32.9	35.4	38.9	41.6	43.4	45.1	47.4	51.4	55.4
1.14	14.00	16.00	763	15.0	1017	18.5	1535	23.1	21.4	23.4	25.9	29.4	32.2	33.9	35.7	37.9	41.9	45.9
1.15	8.00	9.20	756	7.05	1008	8.80	1521	11.7	31.5	33.5	36.0	39.5	42.2	44.0	45.7	48.0	52.0	56.0
1.15	9.20	10.60	756	8.73	1008	10.9	1521	14.5	29.4	31.4	33.9	37.5	40.2	42.0	43.7	46.0	50.0	54.0
1.15	9.60	11.00	756	9.28	1008	11.6	1521	15.3	28.8	30.8	33.3	36.8	39.6	41.3	43.1	45.3	49.3	53.3
1.15	13.00	15.00	756	13.8	1008	17.1	1521	21.7	23.0	25.0	27.5	31.0	33.8	35.5	37.3	39.5	43.5	47.5
1.16	7.40	8.60	750	6.20	1000	7.74	1508	10.3	32.4	34.4	36.9	40.4	43.2	44.9	46.7	48.9	52.9	56.9
1.16	8.60	10.00	750	7.91	1000	9.89	1508	13.1	30.4	32.4	34.9	38.4	41.1	42.9	44.6	46.9	50.9	54.9
1.17	12.00	14.00	743	12.5	991	15.6	1495	20.1	24.6	26.6	29.1	32.6	35.3	37.1	38.8	41.1	45.1	49.1
1.18	7.60	9.00	737	6.52	983	8.14	1483	10.9	32.0	34.0	36.5	40.0	42.7	44.5	46.2	48.5	52.5	56.5
1.18	9.00	10.60	737	8.50	983	10.6	1483	14.1	29.6	31.6	34.1	37.6	40.4	42.1	43.9	46.1	50.1	54.1
1.18	11.00	13.00	737	11.2	983	14.0	1483	18.3	26.1	28.1	30.6	34.1	36.9	38.6	40.4	42.6	46.6	50.7
1.19	8.40	10.00	731	7.67	974	9.59	1470	12.8	30.5	32.5	35.0	38.5	41.3	43.0	44.8	47.0	51.0	55.1
1.20	7.00	8.40	725	5.68	966	7.08	1458	9.44	32.9	34.9	37.4	40.9	43.7	45.4	47.2	49.4	53.4	57.4
1.20	8.00	9.60	725	7.12	966	8.90	1458	11.9	31.2	33.2	35.7	39.2	41.9	43.7	45.4	47.7	51.7	55.7
1.20	9.20	11.00	725	8.80	966	11.0	1458	14.6	29.1	31.1	33.6	37.1	39.9	41.6	43.4	45.6	49.6	53.6
1.20	10.00	12.00	725	9.90	966	12.4	1458	16.3	27.7	29.7	32.2	35.7	38.5	40.2	42.0	44.2	48.2	52.2
1.20	15.00	18.00	725	16.3	966	20.1			19.0	21.0	23.5	27.1	29.8	31.6	33.3	35.6	39.6	43.6
1.21	7.60	9.20	719	6.56	958	8.20	1446	10.9	31.8	33.8	36.3	39.8	42.6	44.3	46.1	48.3	52.3	56.3
1.22	7.40	9.00	713	6.28	950	7.85	1434	10.5	32.1	34.1	36.6	40.1	42.9	44.6	46.4	48.6	52.6	56.6
1.22	9.00	11.00	713	8.55	950	10.7	1434	14.2	29.3	31.3	33.8	37.3	40.0	41.8	43.5	45.8	49.8	53.8
1.23	7.00	8.60	707	5.72	943	7.13	1422	9.51	32.7	34.7	37.2	40.7	43.5	45.2	47.0	49.2	53.2	57.2
1.23	8.60	10.60	707	8.00	943	10.0	1422	13.3	29.9	31.9	34.4	37.9	40.7	42.4	44.2	46.4	50.4	54.4
1.23	10.60	13.00	707	10.7	943	13.4	1422	17.6	26.4	28.4	31.0	34.5	37.2	39.0	40.7	43.0	47.0	51.0
1.23	13.00	16.00	707	13.9	943	17.2	1422	21.9	22.2	24.2	26.7	30.2	33.0	34.7	36.5	38.7	42.7	46.7
1.24	7.40	9.20	701	6.31	935	7.88	1411	10.5	32.0	34.0	36.5	40.0	42.7	44.5	46.2	48.5	52.5	56.5
1.25	8.00	10.00	696	7.17	928	8.97	1400	12.0	30.9	32.9	35.4	38.9	41.6	43.4	45.1	47.4	51.4	55.4
1.25	9.60	12.00	696	9.41	928	11.8	1400	15.6	28.0	30.0	32.5	36.0	38.8	40.5	42.3	44.5	48.5	52.5
1.25	12.00	15.00	696	12.6	928	15.7	1400	20.3	23.8	25.8	28.3	31.8	34.5	36.3	38.0	40.3	44.3	48.3
1.25	16.00	20.00	696	17.6	928	21.5					21.1	24.7	27.4	29.2	30.9	33.2	37.2	41.2
1.26	7.60	9.60	690	6.61	920	8.27	1388	11.0	31.5	33.5	36.0	39.5	42.2	44.0	45.7	48.0	52.0	56.0
1.26	8.40	10.60	690	7.75	920	9.70	1388	12.9	30.1	32.1	34.6	38.1	40.8	42.6	44.3	46.6	50.6	54.6
1.27	11.00	14.00	685	11.3	913	14.1	1377	18.5	25.3	27.3	29.8	33.3	36.1	37.8	39.6	41.8	45.9	49.9
1.28	8.60	11.00	679	8.05	906	10.1	1367	13.4	29.6	31.6	34.1	37.6	40.3	42.1	43.8	46.1	50.1	54.1
1.29	7.00	9.00	674	5.78	899	7.21	1356	9.62	32.4	34.4	36.9	40.4	43.2	44.9	46.7	48.9	52.9	56.9
1.29	14.00	18.00	674	15.2	899	18.8	1356	23.5	19.8	21.8	24.3	27.8	30.6	32.3	34.1	36.3	40.3	44.3
ARC LENGTH FACTOR →									.90								1.00	

M SPEED RATIO RANGE 1.00 - 1.29

Drive Grooves	6	8	10	12	14	16	20
Drive Belt Width	2.22"	2.96"	3.70"	4.44"	5.18"	5.92"	7.40"
Drive Diameter	←	7.0" to 44.0"	→	←	9.0" to 44.0"	→	

NOMINAL (STOCK 7 NON-STOCK) BELT EFF. LENGTHS - INCHES																	
147.0	161.0	165.0	176.0	183.0	198.0	213.0	241.0	256.0	271.0	301.0	331.0	361.0	391.0 *	421.0 *	481.0 *	541.0 *	601.0 *
NOMINAL CENTER DISTANCES - INCHES																	
62.5	69.5	71.5	77.0	80.5	88.0	95.5	109.5	117.0	124.5	139.5	154.5	169.5	184.5	199.5	229.5	259.5	289.5
61.9	68.9	70.9	76.4	79.9	87.4	94.9	108.9	116.4	123.9	138.9	153.9	168.9	183.9	198.9	228.9	258.9	288.9
61.6	68.6	70.6	76.1	79.6	87.1	94.6	108.6	116.1	123.6	138.6	153.6	168.6	183.6	198.6	228.6	258.6	288.6
60.9	67.9	69.9	75.4	78.9	86.4	93.9	107.9	115.4	122.9	137.9	152.9	167.9	182.9	197.9	227.9	257.9	287.9
60.3	67.3	69.3	74.8	78.3	85.8	93.3	107.3	114.8	122.3	137.3	152.3	167.3	182.3	197.3	227.3	257.3	287.3
60.0	67.0	69.0	74.5	78.0	85.5	93.0	107.0	114.5	122.0	137.0	152.0	167.0	182.0	197.0	227.0	257.0	287.0
59.4	66.4	68.4	73.9	77.4	84.9	92.4	106.4	113.9	121.4	136.4	151.4	166.4	181.4	196.4	226.4	256.4	286.4
59.1	66.1	68.1	73.6	77.1	84.6	92.1	106.1	113.6	121.1	136.1	151.1	166.1	181.1	196.1	226.1	256.1	286.1
58.4	65.4	67.4	72.9	76.4	83.9	91.4	105.4	112.9	120.4	135.4	150.4	165.4	180.4	195.4	225.4	255.4	285.4
57.8	64.8	66.8	72.3	75.8	83.3	90.8	104.8	112.3	119.8	134.8	149.8	164.8	179.8	194.8	224.8	254.8	284.8
56.9	63.9	65.9	71.4	74.9	82.4	89.9	103.9	111.4	118.9	133.9	148.9	163.9	178.9	193.9	223.9	253.9	283.9
56.2	63.2	65.2	70.7	74.2	81.7	89.2	103.2	110.7	118.2	133.2	148.2	163.2	176.2	193.2	223.2	253.2	283.2
54.7	61.7	63.7	69.2	72.7	80.2	87.7	101.7	109.2	116.7	131.7	146.7	161.7	176.7	191.7	221.7	251.7	281.7
53.1	60.1	62.1	67.6	71.1	78.6	86.1	100.1	107.6	115.1	130.1	145.1	160.1	175.1	190.1	220.1	250.1	280.1
51.5	58.5	60.5	66.0	69.5	77.0	84.5	98.5	106.0	113.5	128.5	143.5	158.5	173.5	188.5	218.5	248.5	278.5
49.9	56.9	58.9	64.4	67.9	75.4	82.9	96.9	104.4	111.9	126.9	141.9	156.9	171.9	186.9	216.9	246.9	276.9
48.4	55.4	57.4	62.9	66.4	73.9	81.4	95.4	102.9	110.4	125.4	140.4	155.4	170.4	185.4	215.4	245.4	275.4
45.2	52.2	54.2	59.7	63.2	70.7	78.2	92.2	99.7	107.2	122.2	137.2	152.2	167.2	182.2	212.2	242.2	272.2
60.2	67.2	69.2	74.7	78.2	85.7	93.2	107.2	114.7	122.2	137.2	152.2	167.2	182.2	197.2	227.2	257.2	267.2
59.2	66.2	68.2	73.7	77.2	84.7	92.2	106.2	113.7	121.2	136.2	151.2	166.2	181.2	196.2	226.2	256.2	286.2
61.7	68.7	70.7	76.2	79.7	87.2	94.7	108.7	116.2	123.7	138.7	153.7	168.7	183.7	198.7	228.7	258.7	288.7
58.7	65.7	67.7	73.2	76.7	84.2	91.7	105.7	113.2	120.7	135.7	150.7	165.7	180.7	195.7	225.7	255.7	285.7
58.1	65.1	67.1	72.6	76.1	83.6	91.1	105.1	112.6	120.1	135.1	150.1	165.1	180.1	195.1	225.1	255.1	285.1
56.5	63.5	65.5	71.0	74.5	82.0	89.5	103.5	111.0	118.5	133.5	148.5	163.5	178.5	193.5	223.5	253.5	283.5
61.3	68.3	70.3	75.8	79.3	86.8	94.3	108.3	115.8	123.3	138.3	153.3	168.3	183.3	198.3	228.3	258.3	288.3
60.6	67.6	69.6	75.1	78.6	86.1	93.6	107.6	115.1	122.6	137.6	152.6	167.6	182.6	197.6	227.6	257.6	287.6
59.7	66.7	68.7	74.2	77.7	85.2	92.7	106.7	114.2	121.7	136.7	151.7	166.7	181.7	196.7	226.7	256.7	286.7
62.2	69.2	71.2	76.7	80.2	87.7	95.2	109.2	116.7	124.2	139.2	154.2	169.2	184.2	199.2	229.2	259.2	289.2
57.3	64.3	66.3	71.8	75.3	82.8	90.3	104.3	111.8	119.3	134.3	149.3	164.3	179.3	194.3	224.3	254.3	284.3
59.8	66.8	68.8	74.3	77.8	85.3	92.8	106.8	114.3	121.8	136.8	151.8	166.8	181.8	196.8	226.8	256.8	286.8
59.5	66.5	68.5	74.0	77.5	85.0	92.5	106.5	114.0	121.5	136.5	151.5	166.5	181.5	196.5	226.5	256.5	286.5
58.9	65.9	67.9	73.4	76.9	84.4	91.9	105.9	113.4	120.9	135.9	150.9	165.9	180.9	195.9	225.9	255.9	285.9
50.7	57.7	59.7	65.2	68.7	76.2	83.7	97.7	105.2	112.7	127.7	142.7	157.7	172.7	187.7	217.7	247.7	277.7
49.2	56.2	58.2	63.7	67.2	74.7	82.2	96.2	103.7	111.2	126.2	141.2	156.2	171.2	186.2	216.2	246.2	276.2
61.4	68.4	70.4	75.9	79.4	86.9	94.4	108.4	115.9	123.4	138.4	153.4	168.4	183.4	198.4	228.4	258.4	288.4
60.5	67.5	69.5	75.0	78.5	86.0	93.5	107.5	115.0	122.5	137.5	152.58	167.5	182.5	197.5	227.5	257.5	287.5
53.9	60.9	62.9	68.4	71.9	79.4	86.9	100.9	108.4	115.9	130.9	145.9	160.9	175.9	190.9	220.9	250.9	280.9
52.3	59.3	61.3	66.8	70.3	77.8	85.3	99.3	106.8	114.3	129.3	144.3	159.3	174.3	189.3	219.3	249.3	279.3
62.0	69.0	71.0	76.5	80.0	87.5	95.0	109.0	116.5	124.0	139.0	154.0	169.0	184.0	199.0	229.0	259.0	289.0
58.4	65.4	67.4	72.9	76.4	83.9	91.4	105.4	112.9	120.4	135.4	150.4	165.4	180.4	195.4	225.4	255.4	285.4
55.4	62.4	64.4	69.9	73.4	80.9	88.4	102.4	109.9	117.4	132.4	147.4	162.4	177.4	192.4	222.4	252.4	282.4
59.7	66.7	68.7	74.2	77.7	85.2	92.7	106.7	114.2	121.7	136.7	151.7	166.7	181.7	196.7	226.7	256.7	286.7
57.6	64.6	66.6	72.1	75.6	83.1	90.6	104.6	112.1	119.6	134.6	149.6	164.6	179.6	194.6	224.6	254.6	284.6
57.0	64.0	66.0	71.5	75.0	82.5	90.0	104.0	111.5	119.0	134.0	149.0	164.0	179.0	194.0	224.0	254.0	284.0
60.9	67.9	69.9	75.4	78.9	86.4	93.9	107.9	115.4	122.9	137.9	152.9	167.9	182.9	197.9	227.9	257.9	287.9
58.6	65.6	67.6	73.1	76.6	84.1	91.6	105.6	113.1	120.6	135.6	150.6	165.6	180.6	195.6	22.5	255.6	285.6
43.7	50.7	52.7	58.2	61.7	69.2	76.7	90.7	98.2	105.7	120.7	135.7	150.7	165.7	180.7	210.7	240.7	270.7
59.2	66.2	68.2	73.7	77.2	84.7	92.2	106.2	113.7	121.2	136.2	151.2	166.2	181.2	196.2	226.2	256.2	286.2
60.8	67.8	69.8	75.3	78.8	86.3	93.8	107.8	115.3	122.8	137.8	152.8	167.8	182.8	197.8	227.8	257.8	287.8
60.2	67.2	69.2	74.7	78.2	85.7	93.2	107.2	114.7	122.2	137.2	152.2	167.2	182.2	197.2	227.2	257.2	287.2
55.8	62.8	64.8	70.3	73.8	81.3	88.8	102.8	110.3	117.8	132.8	147.8	162.8	177.8	192.8	222.8	252.8	282.8
46.8	53.8	55.8	61.3	64.8	72.3	79.8	93.8	101.3	108.8	123.8	138.8	153.8	168.8	183.8	213.8	243.8	273.8
61.7	68.7	70.7	76.2	79.7	87.2	94.7	108.7	116.2	123.7	138.7	153.7	168.7	183.7	198.7	228.7	258.7	288.7
61.1	68.1	70.1	75.6	79.1	86.6	94.1	108.1	115.6	123.1	138.1	153.1	168.1	183.1	198.1	226.1	258.1	288.1
59.4	66.4	68.4	73.9	77.4	84.9	92.4	106.4	113.9	121.4	136.4	151.4	166.4	181.4	196.4	226.4	256.4	286.4
49.9	56.9	58.9	64.4	67.9	75.4	82.9	96.9	104.4	111.9	126.9	141.9	156.9	171.9	186.9	216.9	246.9	276.9
60.0	67.0	69.0	74.5	78.0	85.5	93.0	107.0	114.5	122.0	137.0	152.0	167.0	182.0	197.0	227.0	257.0	287.0
58.0	65.0	67.0	72.5	76.0	83.5	91.0	105.0	112.5	120.0	135.0	150.0	165.0	180.0	195.0	225.0	255.0	285.0
57.3	64.3	66.3	71.8	75.3	82.8	90.3	104.3	111.8	119.3	134.3	149.3	164.3	179.3	194.3	224.3	254.3	284.3
51.5	58.5	60.5	66.0	69.5	77.0	84.5	98.5	106.0	113.5	128.5	143.5	158.5	173.5	188.5	218.5	248.5	278.5
60.9	67.9	69.9	75.4	78.9	86.4	93.9	107.9	115.4	122.9	137.9	152.9	167.9	182.9	197.9	227.9	257.9	287.9
58.9	65.9	67.9	73.4	76.9	84.4	91.9	105.9	113.4	120.9	135.9	150.9	165.9	180.9	195.9	225.9	255.9	285.9
53.1	60.1	62.1	67.6	71.1	78.6	86.1	100.1	107.6	115.1	130.1	145.1	160.1	179.1	190.1	220.1	250.1	280.1
60.5	67.5	69.5	75.0	78.5	86.0	93.5	107.5	115.0	122.5	137.5	152.5	167.5	182.5	197.5	227.5	257.5	287.5
58.1	65.1	67.1	72.6	76.1	83.6	91.1	105.1	112.6	120.1	135.1	150.1	165.1	180.1	195.1	225.1	255.1	285.1
54.7	61.7	63.7	69.2	72.7	80.2	87.7	101.7	109.2	116.7	131.7	146.7	161.7	176.7	191.7	221.7	251.7	281.7
59.1	661.	68.1	73.6	77.1	84.6	92.1	106.1	113.6	121.1	136.1	151.1	166.1	181.1	196.1	226.1	256.1	286.1
61.4	68.4	70.4	75.9	79.4	86.9	94.4	108.4	115.9	123.4	138.4	153.4	168.4	183.4	198.4	228.4	258.4	288.4
59.7	66.7	68.7	74.2	77.7	85.2	92.7	106.7	114.2	121.7	136.7	151.7	166.7	181.7	196.7	226.7	256.7	286.7
57.6	64.6	66.6	72.1	75.6	83.1	90.6	104.6	112.1	119.6	134.6	149.6	164.6	179.6	194.6	224.6	254.6	284.6
56.2	63.2	65.2	70.7	74.2	81.7	89.2	103.2	110.7	118.2	133.2	148.2	163.2	178.2	193.2	223.2	253.2	283.2
47.6	54.6	56.6	62.1	65.6	73.1	80.6	94.6	102.1	109.6	124.6	139.6	154.6	169.6	184.6	214.6	244.6	274.6
60.3	67.3	69.3	74.8	78.3	85.8	93.3	107.3	114.8	122.3	137.3	152.3	167.3	182.3	197.3	227.3	257.3	287.3
60.6	67.6	69.6	75.1	78.6	86.1	93.6	107.6	115.1	122.6	137.6	152.6	167.6	182.6	197.6	227.6	257.6	287.6
57.8	64.8	66.8	72.3	75.8	83.3	90.8	104.8	112.3	119.8	134.8	149.8	164.8	179.8	194.8	224.8	254.8	284.8
61.2	68.2	70.2	75.7	79.2	86.8	94.3	108.3	115.78	123.3	138.3	153.3	168.3	183.3	198.3	228.3	258.3	288.3
58.4	65.4	67.4	72.9	76.4	83.9	91.4	105.4	112.9	120.4	135.4	150.4	165.4	180.4	195.4	225.4	255.4	285.4
55.0	62.0	64.0	69.5	73.0	80.5	88.0	102.0	109.5	117.0	132.0	147.0	162.0	177.0	192.0	222.0	252.0	282.0
50.7	57.7	59.7	65.2	68.7	76.2	83.7	97.7	105.2	112.7	127.7	142.7	157.7	172.7	187.7	217.7	247.7	277.7
60.5	67.5	69.5	75.0	78.5	86.0	93.5	107.5	115.0	122.5	137.5	152.5	167.5	182.5	197.5	227.5	257.5	287.5
59.4	66.4	68.4	73.9	77.4	84.9	92.4	106.4	113.9	121.4	136.4	151.4	166.4	181.4	196.4	226.4	256.4	286.4
56.5	63.5	65.5	71.0	74.5	82.0	89.5	103.5	111.0	118.5	133.5	148.5	163.5	178.5	193.5	223.5	253.5	283.5
52.3	59.3	61.3	66.8	70.3	77.8	85.3	99.3	106.8	114.3	129.3	144.3	159.3	174.3	189.3	219.3	249.3	279.3
45.2	52.2	54.2	59.7	63.2	70.7	78.2	92.2	99.7	107.2	122.2	137.2	152.2	167.2	182.2	212.2	242.2	272.2
60.0	67.0	69.0	74.5	78.0	85.5	93.0	107.0	114.5	122.0	137.0	152.0	167.0	182.0	197.0	227.0	257.0	287.0
58.6	65.6	67.6	73.1	76.6	84.1	91.6	105.6	113.1	120.6	135.6	150.6	165.6	180.6	195.6	225.6	255.6	285.6
53.9	60.9	62.9	68.4	71.9	79.4	86.9	100.9	108.4	115.9	130.9	145.9	160.9	175.9	190.9	220.9	250.9	280.9
58.1	65.1	67.1	72.6	76.1	83.6	91.1	105.1	112.6	120.1	135.1	150.1	165.1	180.1	195.1	225.1	255.1	285.1
60.9	67.9	69.9	75.4	78.9	86.4	93.9	107.9	115.4	122.9	137.9	152.9	167.9	182.9	197.9	227.9	257.9	287.9
48.3	55.3	57.3	62.8	66.3	73.9	81.4	95.4	102.9	110.4	125.4	140.4	155.4	170.4	185.4	215.4	245.4	275.4
1.00						1.10			1.15				1.25				

* = Non-Standard Lengths

M DRIVE SELECTION TABLES

	SHEAVES Outside Diameters		DRIVEN RPM AND HORSEPOWER PER RIB						How to specify SHEAVE PART NUMBER For example: Sheave 20M140 20 (Grooves) M (Section) 140 (1.40" O.D.)					How to specify BELT PART NUMBER For example: Belt 1650M20 1650 (165.0" Nom E.L.) M (Section) 20 (Ribs)				
			870 RPM DriveR		1160 RPM DriveR		1750 RPM DriveR		NOMINAL (STOCK & NON-STOCK) BELT STANDARD EFF. LENGTHS - INCHES									
Speed Ratio	DriveR	DriveN	RPM	HP	RPM	HP	RPM	HP	90.0	94.0	99.0	106.0	111.5	115.0	118.5	123.0	131.0	139.0
									NOMINAL CENTER DISTANCE - INCHES									
1.30	7.40	9.60	669	6.36	892	7.95	1346	10.6	31.6	33.6	36.1	39.6	42.4	44.1	45.9	48.1	52.1	56.1
1.30	9.20	12.00	669	8.90	892	11.1	1346	14.8	28.3	30.3	32.8	36.3	39.1	40.8	42.6	44.8	48.8	52.8
1.30	10.00	13.00	669	10.0	892	12.5	1346	16.5	26.9	28.9	31.4	34.9	37.7	39.4	41.2	43.4	47.4	51.4
1.31	7.00	9.20	664	5.79	885	7.23	1335	9.66	32.3	34.3	36.8	40.3	43.0	44.8	46.5	48.8	52.8	56.8
1.31	8.40	11.00	664	7.79	885	9.76	1335	13.0	29.7	31.7	34.2	37.7	40.5	42.3	44.0	46.3	50.3	54.3
1.32	7.60	10.00	659	6.67	878	8.34	1325	11.1	31.2	33.2	35.7	39.2	41.9	43.7	45.4	47.7	51.7	55.7
1.32	10.60	14.00	659	10.8	878	13.5	1325	17.8	25.6	27.6	30.1	33.6	36.4	38.2	39.9	42.2	46.2	50.2
1.33	8.00	10.60	654	7.24	872	9.07	1315	12.1	30.4	32.4	34.9	38.4	41.1	42.9	44.6	46.9	50.9	54.9
1.33	9.00	12.00	654	8.65	872	10.8	1315	14.4	28.5	30.5	33.0	36.5	39.2	41.0	42.7	45.0	49.0	53.0
1.33	12.00	16.00	654	12.7	872	15.8	1315	20.4	22.9	24.9	27.4	31.0	33.7	35.5	37.2	39.5	43.5	47.5
1.33	15.00	20.00	654	16.5	872	20.2				19.4	21.9	25.4	28.2	29.9	31.7	33.9	37.9	42.0
1.33	18.00	24.00	654	20.0	872	24.1							22.6	24.3	26.1	28.4	32.4	36.4
1.35	7.40	10.00	644	6.40	859	8.00	1296	10.7	31.3	33.3	35.8	39.3	42.1	43.8	45.6	47.8	51.8	55.8
1.35	9.60	13.00	644	9.49	859	11.9	1296	15.7	27.2	29.2	31.7	35.2	38.0	39.7	41.5	43.7	47.7	51.7
1.36	11.00	15.00	639	11.4	852	14.2	1286	18.6	24.5	26.5	29.0	32.5	35.3	37.0	38.8	41.0	45.0	49.0
1.37	7.00	9.60	635	5.84	846	7.29	1277	9.74	31.9	33.9	36.4	39.9	42.7	44.4	46.2	48.5	52.5	56.5
1.38	8.00	11.00	630	7.28	840	9.11	1268	12.2	30.0	32.0	34.6	38.1	40.8	42.6	44.3	46.6	50.6	54.6
1.38	13.00	18.00	630	14.0	840	17.4	1268	22.1	20.5	22.5	25.0	28.6	31.3	33.1	34.8	37.1	41.1	45.1
1.39	7.60	10.60	625	6.71	834	8.40	1259	11.2	30.7	32.7	35.2	38.7	41.4	43.2	44.9	47.2	51.2	55.2
1.40	8.60	12.00	621	8.13	828	10.2	1250	13.6	28.8	30.8	33.3	36.8	39.5	41.3	43.0	45.3	49.3	53.3
1.40	10.00	14.00	621	10.1	828	12.6	1250	16.6	26.1	28.1	30.6	34.1	36.9	38.6	40.4	42.6	46.6	50.6
1.41	9.20	13.00	617	8.97	822	11.2	1241	14.9	27.5	29.5	32.0	35.5	38.3	40.0	41.8	44.0	48.0	52.0
1.42	10.60	15.00	612	10.9	816	13.6	1232	17.9	24.8	26.8	29.3	32.8	35.6	37.3	39.1	41.3	45.4	49.4
1.43	7.00	10.00	608	5.87	811	7.33	1223	9.81	31.6	33.6	36.1	39.6	42.4	44.1	45.9	48.1	52.1	56.1
1.43	7.40	10.60	608	6.45	811	8.06	1223	10.8	30.8	32.8	35.3	38.8	41.6	43.3	45.1	47.3	51.3	55.3
1.43	8.40	12.00	608	7.87	811	9.86	1223	13.2	28.9	30.9	33.4	36.9	39.7	41.4	43.2	45.5	49.5	53.5
1.43	14.00	20.00	608	15.3	811	18.9	1223	23.7		20.1	22.6	26.1	28.9	30.7	32.4	34.7	38.7	42.7
1.44	9.00	13.00	604	8.71	805	10.9	1215	14.5	27.7	29.7	32.2	35.7	38.4	40.2	41.9	44.2	48.2	52.2
1.45	7.60	11.00	600	6.74	800	8.44	1206	11.3	30.4	32.4	34.9	38.4	41.1	42.9	44.6	46.9	50.9	54.9
1.45	11.00	16.00	600	11.4	800	14.3	1206	18.7	23.7	25.7	28.2	31.7	34.5	36.2	38.0	40.2	44.2	48.2
1.46	9.60	14.00	595	9.55	794	12.0	1198	15.9	26.4	28.4	30.9	34.4	37.2	38.9	40.7	42.9	46.9	50.9
1.49	7.40	11.00	583	6.47	778	8.10	1174	10.8	30.5	32.5	35.0	38.5	41.3	43.0	44.8	47.0	51.0	55.0
1.50	8.00	12.00	580	7.33	773	9.19	1166	12.3	29.2	31.2	33.7	37.2	40.0	41.8	43.5	45.8	49.8	53.8
1.50	10.00	15.00	580	10.1	773	12.7	1166	16.7	25.3	27.3	29.8	33.3	36.0	37.8	39.5	41.8	45.8	49.8
1.50	12.00	18.00	580	12.8	773	15.9	1166	20.6	21.2	23.3	25.8	29.3	32.1	33.8	35.6	37.8	41.8	45.9
1.50	16.00	24.00	580	17.8	773	21.7						21.2	24.0	25.8	27.6	29.8	33.9	37.9
1.51	7.00	10.60	576	5.90	768	7.38	1158	9.87	31.1	33.1	35.6	39.1	41.9	43.6	45.4	47.6	51.7	55.7
1.51	8.60	13.00	576	8.18	768	10.3	1158	13.7	28.0	30.0	32.5	36.0	38.7	40.5	42.2	44.5	48.5	52.5
1.51	10.60	16.00	576	10.9	768	13.7	1158	18.0	24.0	26.0	28.5	32.0	34.8	36.5	38.3	40.5	44.5	48.5
1.52	9.20	14.00	572	9.02	763	11.3	1151	15.0	26.7	28.7	31.2	34.7	37.5	39.2	41.0	43.2	47.2	51.2
1.54	13.00	20.00	564	14.1	753	17.5	1136	22.3	18.8	20.8	23.3	26.9	29.6	31.4	33.2	35.4	39.4	43.5
1.55	8.40	13.00	561	7.91	748	9.92	1129	13.3	28.1	30.1	32.6	36.1	38.9	40.6	42.4	44.6	48.6	52.7
1.56	9.00	14.00	557	8.76	743	11.0	1121	14.6	26.8	28.8	31.3	34.9	37.6	39.4	41.1	43.4	47.4	51.4
1.56	9.60	15.00	557	9.59	743	12.0	1121	15.9	25.5	27.6	30.1	33.6	36.3	38.1	39.8	42.1	46.1	50.1
1.57	7.00	11.00	554	5.92	738	7.40	1114	9.91	30.8	32.8	35.3	38.8	41.6	43.3	45.1	47.3	51.3	55.3
1.58	7.60	12.00	550	6.79	734	8.50	1107	11.4	29.5	31.5	34.0	37.5	40.3	42.1	43.8	46.1	50.1	54.1
1.60	10.00	16.00	543	10.1	725	12.7	1093	16.8	24.4	26.4	28.9	32.5	35.2	37.0	38.7	41.0	45.0	49.0
1.60	15.00	24.00	543	16.6	725	20.4						21.9	24.7	26.5	28.3	30.6	34.6	38.6
1.62	7.40	12.00	537	6.51	716	8.15	1080	10.9	29.7	31.7	34.2	37.7	40.5	42.2	44.0	46.2	50.2	54.2
1.63	8.00	13.00	533	7.37	711	9.24	1073	12.4	28.4	30.4	32.9	36.4	39.2	40.9	42.7	44.9	49.0	53.0
1.63	8.60	14.00	533	8.22	711	10.3	1073	13.8	27.1	29.1	31.6	35.2	37.9	39.7	41.4	43.7	47.7	51.7
1.63	9.20	15.00	533	9.05	711	11.3	1073	15.1	25.8	27.9	30.4	33.9	36.6	38.4	40.1	42.4	46.4	50.4
1.64	11.00	18.00	530	11.5	707	14.4	1067	18.8	22.0	24.0	26.5	30.0	32.8	34.6	36.3	38.6	42.6	46.6
1.67	8.40	14.00	520	7.94	694	9.96	1047	13.3	27.3	29.3	31.8	35.3	38.1	39.8	41.6	43.8	47.8	51.8
1.67	9.00	15.00	520	8.78	694	11.0	1047	14.7	26.0	28.0	30.5	34.0	36.8	38.5	40.3	42.6	46.6	50.6
1.67	9.60	16.00	520	9.61	694	12.0	1047	16.0	24.7	26.7	29.2	32.7	35.5	37.3	39.0	41.3	45.3	49.3
1.67	12.00	20.00	520	12.8	694	16.0	1047	20.7	19.5	21.5	24.0	27.6	30.4	32.1	33.9	36.2	40.2	44.2
1.67	18.00	30.00	520	20.1	694	24.3											27.2	31.2
1.70	10.60	18.00	511	11.0	682	13.7	1029	18.1	22.2	24.3	26.8	30.3	33.1	34.9	36.6	38.9	42.9	46.9
1.71	7.00	12.00	508	5.95	678	7.44	1023	9.98	30.0	32.0	34.5	38.0	40.8	42.5	44.3	46.5	50.5	54.5
1.71	7.60	13.00	508	6.82	678	8.54	1023	11.4	28.7	30.7	33.2	36.7	39.5	41.2	43.0	45.2	49.3	53.3
1.71	14.00	24.00	508	15.4	678	19.0	1023	23.8				22.6	25.4	27.2	39.0	31.3	35.3	39.4
1.74	8.60	15.00	500	8.24	666	10.3	1005	13.8	26.3	28.3	30.8	34.3	37.1	38.8	40.6	42.9	46.9	50.9
1.74	9.20	16.00	500	9.07	666	11.4	1005	15.1	25.0	27.0	29.5	33.0	35.8	37.6	39.3	41.6	45.6	49.6
1.75	8.00	14.00	497	7.39	662	9.27	1000	12.4	27.6	29.6	32.1	35.6	38.4	40.1	41.9	44.1	48.1	52.1
1.76	7.40	13.00	494	6.54	659	8.19	994	11.0	28.9	30.9	33.4	36.9	39.6	41.4	43.1	45.4	49.4	53.4
1.78	9.00	16.00	488	8.80	651	11.0	983	14.7	25.1	27.1	29.7	33.2	36.0	37.7	39.5	41.7	45.7	49.8
1.79	8.40	15.00	486	7.96	648	9.99	977	13.4	26.4	28.4	31.0	34.5	37.2	39.0	40.7	43.0	47.0	51.0
1.80	10.00	18.00	483	10.2	644	12.8	972	16.9	22.7	24.7	27.2	30.8	33.5	35.3	37.1	39.3	43.3	47.4
1.82	11.00	20.00	478	11.5	637	14.4	961	18.9	20.2	22.2	24.8	28.3	31.1	32.9	34.6	36.9	40.9	44.9
1.84	7.60	14.00	472	6.84	630	8.56	951	11.5	27.9	29.9	32.4	35.9	38.7	40.4	42.2	44.4	48.4	52.4
1.85	13.00	24.00	470	14.1	627	17.6	945	22.4			19.7	23.3	26.1	27.9	29.7	32.0	36.0	40.1
1.86	7.00	13.00	467	5.97	623	7.47	940	10.0	29.1	31.2	33.7	37.2	39.9	41.7	43.4	45.7	49.7	53.7
1.86	8.60	16.00	467	8.25	623	10.4	940	13.8	25.4	27.4	30.0	33.5	36.3	38.0	39.8	42.0	46.0	50.1
1.88	8.00	15.00	462	7.41	617	9.29	930	12.5	26.7	28.7	31.2	34.8	37.5	39.3	41.0	43.3	47.3	51.3
1.88	9.60	18.00	462	9.64	617	12.1	930	16.1	22.9	25.0	27.5	31.0	33.8	35.6	37.3	39.6	43.6	47.6
1.88	16.00	30.00	462	17.8	617	21.8										24.4	28.5	32.6
1.89	7.40	14.00	460	6.55	613	8.21	925	11.0	28.0	30.0	32.5	36.0	38.8	40.6	42.3	44.6	48.6	52.6
1.89	10.60	20.00	460	11.0	613	13.8	925	18.1	20.4	22.5	25.0	28.6	31.4	33.1	34.9	37.2	41.2	45.2
1.90	8.40	16.00	457	7.98	610	10.0	921	13.4	25.6	27.6	30.1	33.6	36.4	38.2	39.9	42.2	46.2	50.2
1.96	9.20	18.00	443	9.10	591	11.4	892	15.2	23.2	25.3	27.8	31.3	34.1	35.9	37.6	39.9	43.9	47.9
1.97	7.60	15.00	441	6.85	588	8.58	888	11.5	27.0	29.0	31.5	35.1	37.8	39.6	41.3	43.6	47.6	51.6
2.00	7.00	14.00	435	5.99	580	7.49	875	10.0	28.3	30.3	32.8	36.3	39.1	40.9	42.6	44.9	48.9	52.9
2.00	8.00	16.00	435	7.42	580	9.30	875	12.5	25.9	27.9	30.4	33.9	36.7	38.5	40.2	42.5	46.5	50.5
2.00	9.00	18.00	435	8.83	580	11.1	875	14.8	23.4	25.4	27.9	31.5	34.3	36.0	37.8	40.1	44.1	48.1
2.00	10.00	20.00	435	10.2	580	12.8	875	16.9	20.9	22.9	25.5	29.0	31.8	33.6	35.3	37.6	41.6	45.7
2.00	12.00	24.00	435	12.9	580	16.0	875	20.8			20.4	24.0	26.8	28.6	30.4	32.7	36.8	40.8
2.00	15.00	30.00	435	16.6	580	20.5										25.1	29.2	33.3
2.00	18.00	36.00	435	20.1	580	24.3												
2.03	7.40	15.00	428	6.57	571	8.23	862	11.0	27.2	29.2	31.7	35.2	38.0	39.7	41.5	43.8	47.8	51.8
ARC LENGTH FACTOR →										.80					.90			

M SPEED RATIO RANGE 1.30 - 2.03

Drive Grooves						6		8	10		12	14	16	20			
Drive Belt Width						2.22"		2.96"	3.70"		4.44"	5.18"	5.92"	7.40"			
Drive Diameter						←		7.0" to 44.0"	→		←	9.0" to 44.0"	→				
NOMINAL (STOCK 7 NON-STOCK) BELT EFF. LENGTHS - INCHES																	
147.0	161.0	165.0	176.0	183.0	198.0	213.0	241.0	256.0	271.0	301.0	331.0	361.0	391.0 *	421.0 *	481.0 *	541.0 *	601.0 *
NOMINAL CENTER DISTANCES - INCHES																	
60.1	67.1	69.1	74.6	78.1	85.6	93.1	107.1	114.6	122.2	137.2	152.2	167.2	182.2	197.2	227.2	257.2	287.2
56.8	63.8	65.8	71.3	74.8	82.3	89.8	103.8	111.3	118.8	133.9	148.9	163.9	178.9	193.9	223.9	253.9	283.9
55.4	62.4	64.4	69.9	73.4	80.9	88.4	102.4	109.9	117.4	132.4	147.4	162.4	177.4	192.4	222.4	252.4	282.4
60.8	67.8	69.8	75.3	78.8	86.3	93.8	107.8	115.3	122.8	137.8	152.8	167.8	182.8	197.8	227.8	257.8	257.8
58.3	65.3	67.3	72.8	76.3	83.8	91.3	105.3	112.8	120.3	135.3	150.3	165.3	180.3	195.3	225.3	255.3	285.3
59.7	66.7	68.7	74.2	77.7	85.2	92.7	106.7	114.2	121.7	136.7	151.7	166.7	181.7	196.7	226.7	256.7	286.7
54.2	61.2	63.2	68.7	72.2	79.7	87.2	101.2	108.7	116.2	131.2	146.2	161.2	176.2	191.2	221.2	251.2	281.2
58.9	65.9	67.9	73.4	76.9	84.4	91.9	105.9	113.4	120.9	135.9	150.9	165.9	180.9	195.9	225.9	255.9	285.9
57.0	64.0	66.0	71.5	75.0	82.5	90.0	104.0	111.5	119.0	134.0	149.0	164.0	179.0	194.0	224.0	254.0	284.0
51.5	58.5	60.5	66.0	69.5	77.0	84.5	98.5	106.0	113.5	128.5	143.5	158.5	173.5	188.5	218.5	248.5	278.5
46.0	53.0	55.0	60.5	64.0	71.5	79.0	93.0	100.5	108.0	123.0	138.0	153.0	168.0	183.0	213.0	243.0	273.0
40.4	47.4	49.4	54.9	58.5	66.0	73.5	87.5	95.0	102.5	117.5	132.5	147.5	162.5	177.5	207.5	237.5	267.5
59.8	66.8	68.8	74.3	77.8	85.3	92.8	106.8	114.3	121.8	136.8	151.8	166.8	181.8	196.8	226.8	256.8	286.8
55.7	62.7	64.7	70.2	73.7	81.2	88.7	102.7	110.2	117.7	132.7	147.7	162.8	177.8	192.8	222.8	232.8	282.8
53.1	60.1	62.1	67.6	71.1	78.6	86.1	100.1	107.6	115.1	130.1	145.1	160.1	175.1	190.1	220.1	250.1	280.1
60.5	67.5	69.5	75.0	78.5	86.0	93.5	107.5	115.0	122.5	137.5	152.5	167.5	182.5	197.5	227.5	257.5	287.5
58.6	65.6	67.6	73.1	76.6	84.1	91.6	105.6	113.1	120.6	135.6	150.6	165.6	180.6	195.6	225.6	255.6	285.6
49.1	56.1	58.1	63.6	67.1	74.6	82.1	96.1	103.6	111.1	126.1	141.1	156.1	171.1	186.1	216.2	246.2	276.2
59.2	66.2	68.2	73.7	77.2	84.7	92.2	106.2	113.7	121.2	136.2	151.2	166.2	181.2	196.2	226.2	256.2	286.2
57.3	64.3	66.3	71.8	75.3	82.8	90.3	104.3	111.8	119.3	134.3	149.3	164.3	179.3	194.3	224.3	254.3	284.3
54.6	61.6	63.6	69.1	72.6	80.1	87.6	101.6	109.1	116.6	131.6	146.6	161.6	176.6	191.6	221.7	251.7	281.7
56.0	63.0	65.0	70.5	74.0	81.6	89.1	103.1	110.6	118.1	133.1	148.1	163.1	178.1	193.1	223.1	253.1	283.1
53.4	60.4	62.4	67.9	71.4	78.9	86.4	100.4	107.9	115.4	130.4	145.4	160.4	175.4	190.4	220.4	250.4	280.4
60.1	67.1	69.1	74.6	78.1	85.6	93.1	107.1	114.6	122.1	137.1	152.1	167.1	182.1	197.1	227.2	257.2	287.2
59.3	66.4	68.4	73.9	77.4	84.9	92.4	106.4	113.9	121.4	136.4	151.4	166.4	181.4	196.4	226.4	256.4	286.4
57.5	64.5	66.5	72.0	75.5	83.0	90.5	104.5	112.0	119.5	134.5	149.5	164.5	179.5	194.5	224.5	254.5	284.5
46.7	53.7	55.7	61.2	64.7	72.2	79.8	93.8	101.3	108.8	123.8	138.8	153.8	168.8	183.8	213.8	243.8	273.8
56.2	63.2	65.2	70.7	74.2	81.7	89.2	103.2	110.7	118.2	133.2	148.2	163.2	178.2	193.2	223.2	253.2	283.2
58.9	65.9	67.9	73.4	76.9	84.4	91.9	105.9	113.4	120.9	135.9	150.9	165.9	180.9	195.9	225.9	255.9	285.9
52.2	59.3	61.3	66.8	70.3	77.8	85.3	99.3	106.8	114.3	129.3	144.3	159.3	174.3	189.3	219.3	249.3	279.3
54.9	61.9	63.9	69.4	72.9	80.4	87.9	102.0	109.5	117.0	132.0	147.0	162.0	177.0	192.0	222.0	252.0	282.0
59.0	66.0	68.0	73.5	77.0	84.5	92.0	106.0	113.5	121.0	136.0	151.0	166.0	181.0	196.0	226.0	256.0	286.1
57.8	64.8	66.8	72.3	77.8	83.3	90.8	104.8	112.3	119.8	134.8	149.8	164.8	179.8	194.8	224.8	254.8	284.8
53.8	60.8	62.8	68.3	71.8	79.3	86.8	100.8	108.3	115.8	130.9	145.9	160.9	175.9	190.9	220.9	250.9	280.9
49.9	56.9	58.9	64.4	67.9	75.4	82.9	96.9	104.4	111.9	126.9	141.9	156.9	171.9	186.9	216.9	246.9	276.9
41.9	48.9	50.9	56.5	60.0	67.5	75.0	89.0	96.5	104.0	119.0	134.0	149.0	164.1	179.1	209.1	239.1	269.1
59.7	66.7	68.7	74.2	77.7	85.2	92.7	106.7	114.2	121.7	136.7	151.7	166.7	181.7	196.7	226.7	254.7	286.7
56.5	63.5	65.5	71.0	74.5	82.0	89.5	103.5	111.0	118.5	133.5	148.5	163.5	178.5	193.5	223.5	253.5	283.5
52.5	59.6	61.6	67.1	70.6	78.1	85.6	99.6	107.1	114.6	129.6	144.6	159.6	174.6	189.6	219.6	249.6	279.6
55.2	62.2	64.2	69.7	73.2	80.8	88.3	102.3	109.8	117.3	132.3	147.3	162.3	177.3	192.3	222.3	252.3	282.3
47.5	54.5	56.5	62.0	65.5	73.0	80.5	94.5	102.0	109.5	124.5	139.6	154.6	169.6	184.6	214.6	244.6	274.6
56.7	63.7	65.7	71.2	74.7	82.2	89.7	103.7	111.2	118.7	133.7	148.7	163.7	178.7	193.7	223.7	253.7	283.7
55.4	62.4	64.4	69.9	73.4	80.9	88.4	102.4	109.9	117.4	132.4	147.4	162.4	177.4	192.4	222.4	252.4	282.4
54.1	61.1	63.1	68.6	72.1	79.6	87.1	101.2	108.7	116.2	131.2	146.2	161.2	176.2	191.2	221.2	251.2	281.2
59.3	66.3	68.3	73.8	77.3	84.8	92.3	106.4	113.9	121.4	136.4	151.4	166.4	181.4	196.4	226.4	256.4	286.4
58.1	65.1	67.1	72.6	76.1	83.6	91.1	105.1	112.6	120.1	135.1	150.1	165.1	180.1	195.1	225.1	255.1	285.1
53.0	60.0	62.0	67.5	71.0	78.5	86.0	100.0	107.5	115.1	130.1	145.1	160.1	175.1	190.1	220.1	250.1	280.1
42.6	49.7	51.7	57.2	60.7	68.2	75.8	89.8	97.3	104.8	119.8	134.8	149.8	164.8	179.8	209.8	239.8	269.8
58.2	65.2	67.2	72.7	76.2	83.7	91.2	105.2	112.7	120.2	135.3	150.3	165.3	180.3	195.3	225.3	255.3	285.3
57.0	64.0	66.0	71.5	75.0	82.5	90.0	104.0	111.5	119.0	134.0	149.0	164.0	179.0	194.0	224.0	254.0	284.0
55.7	62.7	64.7	70.2	73.7	81.2	88.7	102.7	110.2	117.7	132.7	147.7	162.7	177.7	192.7	222.7	252.7	282.7
54.4	61.4	63.4	68.9	72.4	80.0	87.5	101.5	109.0	116.5	131.5	146.5	161.5	176.5	191.5	221.5	251.5	281.5
50.6	57.6	59.6	65.1	68.6	76.2	83.7	97.7	105.2	112.7	127.7	142.7	157.7	172.7	187.7	219.7	247.7	277.7
55.8	62.9	64.9	70.4	73.9	81.4	88.9	102.9	110.4	117.9	132.9	147.9	162.9	177.9	192.9	222.9	252.9	282.9
54.6	61.6	63.6	69.1	72.6	80.1	87.6	101.6	109.1	116.6	131.6	146.6	161.6	176.6	191.6	221.6	251.6	281.6
53.3	60.3	62.3	67.8	71.3	78.8	86.3	100.4	107.9	115.4	130.4	145.4	160.4	175.4	190.4	220.4	250.4	280.4
48.2	55.2	57.2	62.8	66.3	73.8	81.3	95.3	102.8	110.3	125.3	140.3	155.3	170.3	185.3	215.3	245.3	275.4
35.3	42.4	44.4	50.0	53.5	61.0	68.6	82.6	90.1	97.6	112.7	127.7	142.7	157.7	172.7	202.7	232.7	262.8
50.9	57.9	59.9	65.4	68.9	76.5	84.0	98.0	105.5	113.0	128.0	143.0	158.0	173.0	188.0	218.0	248.0	278.0
58.5	65.5	67.5	73.0	76.5	84.0	91.6	105.6	113.1	120.6	135.6	150.6	165.6	1806	195.6	225.6	255.6	285.6
57.3	64.3	66.3	71.8	75.3	82.8	90.3	104.3	111.8	119.3	134.3	149.3	164.3	179.3	194.3	224.3	254.3	284.3
43.4	50.4	52.4	58.0	61.5	69.0	76.5	90.5	98.0	105.6	120.6	135.6	150.6	165.6	180.6	210.6	240.6	270.6
54.9	61.9	63.9	69.4	72.9	80.4	87.9	101.9	109.4	116.9	131.9	146.9	161.9	176.9	191.9	222.0	252.0	282.0
53.6	60.6	62.6	67.1	71.6	79.1	86.7	100.7	108.2	115.7	130.7	145.7	160.7	175.7	190.7	220.7	250.7	280.7
56.1	63.2	65.2	70.7	74.2	81.7	89.2	103.2	110.7	118.2	136.2	148.2	163.2	178.2	193.2	223.2	253.2	283.2
57.4	64.4	66.4	71.9	75.4	82.9	90.4	104.4	112.0	119.5	134.5	149.5	164.5	179.5	194.5	224.5	254.5	284.5
53.8	60.8	62.8	68.3	71.8	79.3	86.8	100.8	108.3	115.8	130.8	145.8	160.8	175.8	190.8	220.8	250.9	280.9
55.0	62.0	64.0	69.6	73.1	80.6	88.1	102.1	109.6	117.1	132.1	147.1	162.1	177.1	192.1	222.1	252.1	282.1
51.4	58.4	60.4	65.9	69.4	76.9	84.4	98.4	105.9	113.4	128.5	143.5	158.5	173.5	188.5	218.5	248.5	278.5
49.0	56.0	58.0	63.5	67.0	74.5	82.0	96.1	103.6	111.1	126.1	141.1	156.1	171.1	186.1	216.1	246.1	276.1
56.5	63.5	65.5	71.0	74.5	82.0	89.5	103.5	111.0	118.5	133.5	148.5	163.5	178.5	193.5	223.5	253.5	283.5
44.1	51.2	53.2	58.7	62.2	69.7	77.3	91.3	98.8	106.3	121.3	136.3	151.4	166.4	181.4	211.4	241.4	271.4
57.7	64.7	66.7	72.2	75.7	83.2	90.8	104.8	112.3	119.8	134.8	149.8	164.8	179.8	194.8	224.8	254.8	284.8
54.1	61.1	63.1	68.6	72.1	79.6	87.1	101.1	108.6	116.1	131.1	146.1	161.1	176.2	191.2	221.2	251.2	281.2
55.3	62.3	64.3	69.9	73.4	80.9	88.4	102.4	109.9	117.4	132.4	147.4	162.4	177.4	192.4	222.4	252.4	282.4
51.7	58.7	60.7	66.2	69.7	77.2	84.7	98.7	106.3	113.8	128.8	143.8	158.8	173.8	188.8	218.8	248.8	278.8
36.7	43.8	45.9	51.4	54.9	62.5	70.0	84.1	91.6	99.1	114.2	129.2	144.2	159.2	174.2	204.3	234.3	264.3
56.6	63.6	65.6	71.1	74.6	82.1	89.6	103.6	111.2	118.7	133.7	148.7	163.7	178.7	193.7	223.7	253.7	283.7
49.3	56.3	58.3	63.8	67.3	74.8	82.3	96.4	103.9	111.4	126.4	141.4	156.4	171.4	186.4	216.4	246.4	276.4
54.2	61.2	63.2	68.7	72.2	79.8	87.3	101.3	108.8	116.3	131.3	146.3	161.3	176.3	191.3	221.3	251.3	281.3
52.0	59.0	61.0	66.5	70.0	77.5	85.0	99.1	106.6	114.1	129.1	144.1	159.1	174.1	189.1	219.1	249.1	279.1
55.6	62.6	64.7	70.2	73.7	81.2	88.7	102.7	110.2	117.7	132.7	147.7	162.7	177.7	192.7	222.7	252.7	282.7
56.9	63.9	65.9	71.4	74.9	82.4	89.9	104.0	111.5	119.0	134.0	149.0	164.0	179.0	194.0	224.0	254.0	284.0
54.5	61.5	63.5	69.0	72.5	80.1	87.6	101.6	109.1	116.6	131.6	146.6	161.6	176.6	191.6	221.6	251.6	281.6
52.1	59.1	61.1	66.7	70.2	77.7	85.2	99.2	106.7	114.2	129.2	144.2	159.2	174.2	189.3	219.3	249.3	279.3
49.7	56.7	58.7	64.3	67.8	75.3	82.8	96.8	104.3	111.8	126.9	141.9	156.9	171.9	186.9	216.9	246.9	276.9
44.8	51.9	53.9	59.4	63.0	70.5	78.0	92.0	99.6	107.1	122.1	137.1	152.1	167.1	182.1	212.2	242.2	272.2
37.4	44.5	46.6	52.1	55.7	63.2	70.8	84.8	92.4	99.9	114.9	130.0	145.0	160.0	175.0	205.0	235.1	265.1
29.7	37.0	39.1	44.7	48.3	55.9	63.5	77.6	85.1	92.7	107.7	122.8	137.8	152.8	167.9	197.9	227.9	258.0
55.8	62.8	64.8	70.3	73.8	81.3	88.8	102.8	110.4	117.9	132.9	147.9	162.9	177.9	192.9	222.9	252.9	282.9
.90	1.00						1.10			1.15						1.25	

* = Non-Standard Lengths

M DRIVE SELECTION TABLES

	SHEAVES Outside Diameters		DRIVEN RPM AND HORSEPOWER PER RIB						How to specify SHEAVE PART NUMBER For example: Sheave 20M140 20 (Grooves) M (Section) 140 (1.40'' O.D.)					How to specify BELT PART NUMBER For example: Belt 1650M20 1650 (165.0'' Nom E.L.) M (Section) 20 (Ribs)				
			870 RPM DriveR		1160 RPM DriveR		1750 RPM DriveR		NOMINAL (STOCK & NON-STOCK) BELT STANDARD EFF. LENGTHS - INCHES									
Speed Ratio	DriveR	DriveN	RPM	HP	RPM	HP	RPM	HP	90.0	94.0	99.0	106.0	111.5	115.0	118.5	123.0	131.0	139.0
									NOMINAL CENTER DISTANCE - INCHES									
2.08	9.60	20.00	418	9.66	557	12.1	841	16.1	21.1	23.2	25.7	29.3	32.1	33.9	35.6	37.9	41.9	46.0
2.09	8.60	18.00	416	8.27	555	10.4	837	13.9	23.7	25.7	28.2	31.8	34.5	36.3	38.1	40.3	44.4	48.4
2.11	7.60	16.00	412	6.86	549	8.59	829	11.5	26.1	28.2	30.7	34.2	37.0	38.7	40.5	42.8	46.8	50.8
2.14	7.00	15.00	406	6.00	542	7.50	817	10.1	27.4	29.5	32.0	35.5	38.3	40.0	41.8	44.0	48.1	52.1
2.14	8.40	18.00	406	8.00	542	10.0	817	13.4	23.8	25.8	28.4	31.9	34.7	36.5	38.2	40.5	44.5	48.5
2.14	14.00	30.00	406	15.4	542	19.1	817	23.9							23.3	25.7	29.9	34.0
2.16	7.40	16.00	402	6.57	537	8.24	810	11.1	26.3	28.3	30.8	34.4	37.1	38.9	40.7	42.9	46.9	50.9
2.17	9.20	20.00	400	9.11	534	11.4	806	15.2	21.4	23.5	26.0	29.6	32.4	34.2	35.9	38.2	42.2	46.3
2.18	11.00	24.00	399	11.6	532	14.5	802	18.9			21.0	24.7	27.5	29.3	31.1	33.4	37.5	41.5
2.22	9.00	20.00	391	8.84	522	11.1	788	14.8	21.5	23.6	26.2	29.7	32.5	34.3	36.1	38.3	42.4	46.4
2.25	8.00	18.00	386	7.44	515	9.32	777	12.5	24.1	26.1	28.7	32.2	35.0	36.7	38.5	40.8	44.8	48.8
2.25	16.00	36.00	386	17.9	515	21.9												
2.26	10.60	24.00	384	11.0	513	13.8	774	18.2		18.6	21.3	24.9	27.8	29.6	31.4	33.7	37.7	41.8
2.29	7.00	16.00	379	6.00	506	7.51	764	10.1	26.6	28.6	31.1	34.7	37.4	39.2	40.9	43.2	47.2	51.2
2.31	13.00	30.00	376	14.2	502	17.6	757	22.5							24.0	26.4	30.6	34.7
2.33	8.60	20.00	373	8.28	497	10.4	751	13.9	21.8	23.9	26.4	30.0	32.8	34.6	36.4	38.6	42.7	46.7
2.37	7.60	18.00	367	6.87	489	8.61	738	11.6	24.3	26.4	28.9	32.5	35.3	37.0	38.8	41.1	45.1	49.1
2.38	8.40	20.00	365	8.01	487	10.0	735	13.4	21.9	24.0	26.6	30.1	32.9	34.7	36.5	38.8	42.8	46.8
2.40	10.00	24.00	362	10.2	483	12.8	729	17.0		19.0	21.7	25.3	28.2	30.0	31.8	34.1	38.2	42.2
2.40	15.00	36.00	362	16.7	483	20.5												27.5
2.43	7.40	18.00	358	6.59	477	8.25	720	11.1	24.5	26.5	29.1	32.6	35.4	37.2	39.0	41.2	45.3	49.3
2.44	18.00	44.00	356	20.2	475	24.4												
2.50	8.00	20.00	348	7.44	464	9.33	700	12.5	22.2	24.3	26.8	30.4	33.2	35.0	36.8	39.1	43.1	47.1
2.50	9.60	24.00	348	9.68	464	12.1	700	16.1		19.3	21.9	25.6	28.5	30.3	32.1	34.4	38.4	42.5
2.50	12.00	30.00	348	12.9	464	16.1	700	20.8						22.7	24.6	27.0	31.2	35.4
2.57	7.00	18.00	338	6.01	451	7.52	680	10.1	24.8	26.8	29.4	32.9	35.7	37.5	39.2	41.5	45.5	49.6
2.57	14.00	36.00	338	15.4	451	19.1	680	23.9										28.1
2.61	9.20	24.00	333	9.13	444	11.4	670	15.3		19.5	22.2	25.9	28.7	30.5	32.3	34.6	38.7	42.8
2.63	7.60	20.00	330	6.88	441	8.62	665	11.6	22.5	24.6	27.1	30.7	33.5	35.3	37.1	39.3	43.4	47.4
2.67	9.00	24.00	325	8.85	434	11.1	655	14.8		19.7	22.3	26.0	28.9	30.7	32.5	34.8	38.9	42.9
2.70	7.40	20.00	322	6.59	429	8.26	648	11.1	22.6	24.7	27.3	30.8	33.7	35.4	37.2	39.5	43.5	47.6
2.73	11.00	30.00	318	11.6	424	14.5	641	19.0						23.4	25.3	27.7	31.9	36.1
2.75	16.00	44.00	316	17.9	421	21.9												
2.77	13.00	36.00	314	14.2	418	17.6	631	22.5										28.7
2.79	8.60	24.00	311	8.30	415	10.4	627	13.9	17.7	19.9	22.6	26.3	29.1	31.0	32.8	35.1	39.2	43.2
2.83	10.60	30.00	307	11.0	409	13.8	618	18.2					21.7	23.6	25.5	27.9	32.2	36.3
2.86	7.00	20.00	304	6.02	405	7.53	611	10.1	22.9	25.0	27.5	31.1	33.9	35.7	37.5	39.8	43.8	47.9
2.86	8.40	24.00	304	8.02	405	10.1	611	13.5	17.9	20.0	22.7	26.4	29.3	31.1	32.9	35.2	39.3	43.4
2.93	15.00	44.00	296	16.7	395	20.5												
3.00	8.00	24.00	290	7.45	386	9.35	583	12.5	18.1	20.3	23.0	26.7	29.5	31.4	33.2	35.5	39.6	43.6
3.00	10.00	30.00	290	10.2	386	12.8	583	17.0					22.1	24.0	25.9	28.3	32.6	36.7
3.00	12.00	36.00	290	12.9	386	16.1	583	20.8										29.4
3.13	9.60	30.00	277	9.69	370	12.1	559	161					22.3	24.3	26.2	28.6	32.8	37.0
3.14	14.00	44.00	277	15.4	369	19.1	557	24.0										
3.16	7.60	24.00	275	6.88	367	8.63	553	11.6	18.4	20.6	23.2	26.9	29.8	31.6	33.4	35.8	39.9	43.9
3.24	7.40	24.00	268	6.60	358	8.27	540	11.1	18.5	20.7	23.4	27.1	30.0	31.8	33.6	35.9	40.0	44.1
3.26	9.20	30.00	266	9.14	355	11.5	536	15.3					22.6	24.5	26.4	28.9	33.1	37.3
3.27	11.00	36.00	266	11.6	354	14.5	535	19.0									25.5	30.0
3.33	9.00	30.00	261	8.86	348	11.1	525	14.8					22.7	24.6	26.6	29.0	33.2	37.4
3.38	13.00	44.00	257	14.2	343	17.6	517	22.5										
3.40	10.60	36.00	255	11.0	341	13.8	514	18.2									25.8	30.3
3.43	7.00	24.00	253	6.02	338	7.54	510	10.1	18.7	20.9	23.6	27.3	30.2	32.0	33.8	36.2	40.3	44.4
3.49	8.60	30.00	249	8.30	332	10.4	501	13.9					23.0	24.9	26.8	29.2	33.5	37.7
3.57	8.40	30.00	243	8.02	324	10.1	490	13.5					23.1	25.0	26.9	29.4	33.6	37.8
3.60	10.00	36.00	241	10.2	322	12.8	486	17.0									26.2	30.6
3.67	12.00	44.00	237	12.9	316	16.1	476	20.8										
3.75	8.00	30.00	232	7.46	309	9.35	466	12.5				20.2	23.3	25.3	27.2	29.6	33.9	38.1
3.75	9.60	36.00	232	9.69	309	12.1	466	16.1									26.4	30.9
3.91	9.20	36.00	222	9.14	296	11.5	447	15.3									26.6	31.1
3.95	7.60	30.00	220	6.89	293	8.63	443	11.6				20.4	23.6	25.5	27.4	29.9	34.1	38.3
4.00	9.00	36.00	217	8.86	290	11.1	437	14.8									26.8	31.3
4.00	11.00	44.00	217	11.6	290	14.5	437	19.0										
4.05	7.40	30.00	214	6.60	286	8.29	432	11.1				20.5	23.7	25.7	27.6	30.0	34.3	38.5
4.15	10.60	44.00	209	11.1	279	13.8	421	18.2										
4.19	8.60	36.00	207	8.30	276	10.4	417	13.9									27.0	31.5
4.29	7.00	30.00	202	6.03	270	7.54	407	10.1				20.8	23.9	25.9	27.8	30.3	34.5	38.7
4.29	8.40	36.00	202	8.02	270	10.1	407	13.5									27.1	31.6
4.40	10.00	44.00	197	10.2	263	12.8	397	17.0										
4.50	8.00	36.00	193	7.46	257	9.36	388	12.6									27.4	31.9
4.58	9.60	44.00	189	9.69	253	12.2	382	16.2										
4.74	7.60	36.00	183	6.89	244	8.64	369	11.6									27.6	32.1
4.78	9.20	44.00	182	9.14	242	11.5	366	15.3										
4.87	7.40	36.00	178	6.60	238	8.29	359	11.1								23.0	27.7	32.3
4.89	9.00	44.00	177	8.86	237	11.1	357	14.8										
5.12	8.60	44.0	169	8.31	226	10.4	341	13.9										
5.14	7.00	36.00	169	6.03	225	7.54	340	10.1								23.2	28.0	32.5
5.24	8.40	44.00	166	8.03	221	10.1	333	13.5										
5.50	8.00	44.00	158	7.46	21.	9.36	318	12.6										
5.79	7.60	44.00	150	6.89	200	8.64	302	11.6										
5.95	7.40	44.00	146	6.60	194	8.28	294	11.1										
6.29	7.00	44.00	138	6.03	184	7.54	278	10.1										
ARC LENGTH FACTOR →									.80									

M SPEED RATIO RANGE 2.08 - 6.29

				Drive Grooves 6				8	10	12		14	16	20			
				Drive Belt Width . . . . . 2.22"				2.96"	3.70"	4.44"		5.18"	5.92"	7.40"			
				Drive Diameter . . . . . ←				7.0" to 44.0"	→	←		9.0" to 44.0"	→				
NOMINAL (STOCK 7 NON-STOCK) BELT EFF. LENGTHS - INCHES																	
147.0	161.0	165.0	176.0	183.0	198.0	213.0	241.0	256.0	271.0	301.0	331.0	361.0	391.0 *	421.0 *	481.0 *	541.0 *	601.0 *
NOMINAL CENTER DISTANCES - INCHES																	
50.0	57.0	59.0	64.6	68.1	75.6	83.1	97.1	104.6	112.1	127.2	142.2	157.2	172.2	187.2	217.5	247.2	277.2
52.4	59.4	61.4	67.0	70.5	78.0	85.5	99.5	107.0	114.5	129.5	144.5	159.5	174.6	189.6	219.6	249.6	279.6
54.8	61.8	63.8	69.3	72.9	80.4	87.9	101.9	109.4	116.9	131.9	146.9	161.9	176.9	191.9	221.9	251.9	281.9
56.1	63.1	65.1	70.6	74.1	81.6	89.1	103.2	110.7	118.2	133.2	148.2	163.2	178.2	193.2	223.2	253.2	283.2
52.6	59.6	61.6	67.1	70.6	78.1	85.6	99.7	107.2	114.7	129.7	144.7	159.7	174.7	189.7	219.7	249.7	279.7
38.1	45.3	47.3	52.9	56.4	64.0	71.5	85.6	93.1	100.6	115.7	130.7	145.7	160.8	175.8	205.8	235.8	265.8
55.0	62.0	64.0	69.5	73.0	80.5	88.0	102.0	109.5	117.1	132.1	147.1	162.1	177.1	192.1	222.1	252.1	282.1
50.3	57.3	59.3	64.9	68.4	75.9	83.4	97.4	104.9	112.4	127.5	142.5	157.5	172.5	187.5	217.5	247.5	277.5
45.6	52.6	54.6	60.2	63.7	71.2	78.8	92.8	100.3	107.8	122.9	137.9	152.9	167.9	182.9	212.9	242.9	272.9
50.4	57.5	59.5	65.0	68.5	76.0	83.6	97.6	105.1	112.6	127.6	142.6	157.6	172.6	187.7	217.7	247.7	277.7
52.9	59.9	61.9	67.4	70.9	78.4	85.9	100.0	107.5	115.0	130.0	145.0	160.	175.0	190.0	220.0	250.0	280.0
31.3	38.4	40.4	46.1	49.7	57.3	64.9	79.0	86.6	94.1	109.2	124.3	139.3	154.4	169.4	199.4	229.5	259.5
45.8	52.9	54.9	60.5	64.0	71.5	79.1	93.1	100.6	108.1	123.2	138.2	153.2	168.2	183.2	213.2	243.2	273.3
55.3	62.3	64.3	69.8	73.3	80.8	88.3	102.3	109.9	117.4	132.4	147.4	162.4	177.4	192.4	222.4	252.4	282.4
38.8	46.0	48.0	53.6	57.1	64.7	72.2	86.3	93.9	101.4	116.4	131.5	146.5	161.5	176.5	206.6	236.6	266.6
50.7	57.8	59.8	65.3	68.8	76.3	83.9	97.9	105.4	112.9	127.9	142.9	157.9	173.0	188.0	218.0	248.0	278.0
53.1	60.2	62.2	67.7	71.2	78.7	86.2	100.3	107.8	115.3	130.3	145.3	160.3	175.3	190.3	220.3	250.3	280.4
50.9	57.9	59.9	65.4	69.0	76.5	84.0	98.0	105.5	113.1	128.1	143.1	158.1	173.1	188.1	218.1	248.1	278.1
46.3	53.4	55.4	60.9	64.4	72.0	79.5	93.5	101.1	108.6	123.6	138.6	153.7	168.7	183.7	213.7	243.7	273.7
31.7	39.1	41.1	46.8	50.4	58.0	65.6	79.8	87.3	94.9	110.0	125.0	140.1	155.1	170.1	200.2	230.2	260.3
53.3	60.3	62.3	67.9	71.4	78.9	86.4	100.4	107.9	115.4	130.5	145.5	160.5	175.5	190.5	220.5	250.5	280.5
			37.0	40.8	48.6	56.3	70.6	78.3	85.8	101.0	116.1	131.2	146.3	161.3	191.4	221.4	251.5
51.2	58.2	60.2	65.7	69.3	76.8	84.3	98.3	105.8	113.4	128.4	143.4	158.4	173.4	188.4	218.4	248.4	278.5
46.6	53.6	55.7	61.2	64.7	72.3	79.8	93.8	101.4	108.9	123.9	138.9	154.0	169.0	184.0	214.0	244.0	274.0
39.5	46.7	48.7	54.3	57.8	65.4	73.0	87.1	94.6	102.1	117.2	132.2	147.3	162.3	177.3	207.3	237.4	267.4
53.6	60.6	62.6	68.2	71.7	79.2	86.7	100.7	108.2	115.7	130.8	145.8	160.8	175.8	190.8	220.8	250.8	280.8
32.4	39.7	41.8	47.5	51.1	58.7	66.3	80.5	88.1	95.6	110.7	125.8	140.8	155.9	170.9	200.9	231.0	261.0
46.9	53.9	55.9	61.5	65.0	72.6	80.1	94.1	101.7	109.2	124.2	139.2	154.3	169.3	184.3	214.3	244.3	274.3
51.5	58.5	60.5	66.0	69.6	77.1	84.6	98.6	106.2	113.7	128.7	143.7	158.7	173.7	188.7	218.7	248.8	278.8
47.0	54.1	56.1	61.6	65.2	72.7	80.2	94.3	101.8	109.3	124.4	139.4	154.4	169.4	184.4	214.5	244.5	274.5
51.6	58.7	60.7	66.2	69.7	77.2	84.8	98.8	106.3	113.8	128.8	143.9	158.9	173.9	188.9	218.9	248.9	278.9
40.2	47.4	49.4	55.0	58.5	66.1	73.7	87.8	95.3	102.9	117.9	133.0	148.0	163.0	178.1	208.1	238.1	268.1
		32.4	38.3	42.1	49.9	57.7	72.0	79.7	87.3	102.4	117.6	132.7	147.7	162.8	192.9	223.0	253.0
33.0	40.4	42.5	48.2	51.8	59.4	67.0	81.2	88.8	96.3	111.4	126.5	141.6	156.6	171.6	201.7	231.7	261.8
47.3	54.4	56.4	61.9	65.5	73.0	80.5	94.6	102.1	109.6	124.7	139.7	154.7	169.7	184.7	214.8	244.8	274.8
40.5	47.6	49.7	55.3	58.8	66.4	74.0	88.1	95.6	103.2	118.2	133.3	148.3	163.3	178.4	208.4	238.4	268.5
51.9	58.9	61.0	66.5	70.0	77.5	85.1	99.1	106.6	114.1	129.1	144.2	159.2	174.2	189.2	219.2	249.2	279.2
47.4	54.5	56.5	62.1	65.6	73.2	80.7	94.7	102.3	109.8	124.8	139.8	154.9	169.9	184.9	214.9	244.9	275.0
30.8	33.0	39.0	42.7	50.6	58.4	72.7	80.4	88.0	103.2	118.3	133.4	148.5	163.5	193.6	223.7	253.8	
47.7	54.8	56.8	62.4	65.9	73.4	81.0	95.0	102.6	110.1	125.1	140.2	155.2	170.2	2185.2	215.2	245.2	275.3
40.9	48.1	50.1	55.7	59.3	66.9	74.4	88.5	93.1	103.6	118.7	133.7	148.8	163.8	178.8	208.9	238.9	268.9
33.7	41.1	43.2	48.8	52.4	60.1	67.8	81.9	89.5	97.1	112.2	127.3	142.3	157.4	172.4	202.5	232.5	262.5
41.1	48.3	450.4	56.0	59.5	67.1	74.7	88.8	96.4	103.9	119.0	134.0	149.1	164.1	179.1	209.2	239.2	269.2
	31.4	33.6	39.6	43.4	51.3	59.1	73.4	81.1	88.7	103.9	119.0	134.1	149.2	164.3	194.4	224.5	254.5
48.0	55.1	57.1	62.7	66.2	73.7	81.3	95.3	102.9	110.4	125.4	140.5	155.5	170.5	185.5	215.5	245.6	275.6
48.1	55.2	57.2	62.8	66.3	73.9	81.4	95.5	103.0	110.5	125.6	140.6	155.6	170.6	185.7	215.7	245.7	275.7
41.4	48.6	50.7	56.3	59.8	67.4	75.0	89.1	96.7	104.2	119.3	134.3	149.4	164.4	179.4	209.5	239.5	269.5
34.3	41.7	43.8	49.5	53.1	60.8	68.5	82.7	90.2	97.8	112.9	128.0	143.1	158.1	173.2	203.2	233.3	263.3
41.6	48.8	50.8	56.4	60.0	67.6	75.2	89.3	96.8	104.4	119.4	134.5	149.5	164.5	179.6	209.6	239.7	269.7
	32.0	34.2	40.3	44.0	51.9	59.7	74.1	81.8	89.4	104.6	119.8	134.9	150.0	165.0	195.1	225.2	255.3
34.6	42.0	44.1	49.8	53.4	61.1	68.7	82.9	90.5	98.1	113.2	128.3	143.4	158.4	173.5	203.5	233.6	263.6
48.4	55.5	57.5	63.1	66.6	74.2	81.7	95.8	103.3	110.8	125.9	140.9	155.9	171.0	186.0	216.0	246.0	276.0
41.8	49.0	51.1	56.7	60.2	67.9	75.4	89.6	97.1	104.7	119.7	134.8	149.8	164.9	179.9	209.9	240.0	270.0
42.0	49.2	51.2	56.8	60.4	68.0	75.6	89.7	97.3	104.8	119.9	134.9	150.0	165.0	180.0	210.1	240.1	270.1
35.0	42.4	44.5	50.2	53.8	61.5	69.2	83.4	91.0	98.5	113.6	128.7	143.8	158.9	179.9	204.0	234.0	264.1
	32.6	34.9	40.9	44.7	52.6	60.4	74.8	82.5	90.1	105.3	120.5	135.6	150.7	165.8	195.9	226.0	256.0
42.2	49.4	51.5	57.1	60.7	68.3	75.9	90.0	97.5	105.1	120.2	135.2	150.3	163.3	180.3	210.4	240.4	270.4
35.2	42.7	44.8	50.5	54.1	61.8	69.4	83.7	91.2	98.8	113.9	129.0	144.1	159.2	174.2	204.3	234.3	264.4
35.5	42.9	45.0	50.7	54.4	62.1	69.7	83.9	91.5	99.1	114.2	129.3	144.4	159.5	174.5	204.6	234.6	264.7
42.5	49.7	51.8	57.4	61.0	68.6	76.2	90.3	97.8	105.4	120.5	135.5	150.6	165.6	180.6	210.7	240.7	270.8
35.6	43.1	45.2	50.9	54.5	62.2	69.9	84.1	91.7	99.3	114.4	129.5	144.5	159.6	174.7	204.7	234.8	264.8
	33.2	35.5	41.5	45.3	53.3	61.1	75.5	83.2	90.8	106.0	121.2	136.3	151.4	166.5	196.6	226.7	256.8
42.6	49.9	51.9	57.5	61.1	68.7	76.3	90.4	98.0	105.5	120.6	135.7	150.7	165.8	180.8	210.8	240.9	270.9
	33.5	35.7	41.8	45.6	53.5	61.4	75.8	83.5	91.1	106.3	121.5	136.6	151.7	166.8	196.9	227.0	257.1
35.9	43.3	45.4	51.2	54.8	62.5	70.2	84.4	92.0	99.5	114.7	129.8	144.8	159.9	175.0	205.0	235.1	265.1
42.9	50.1	52.2	57.8	61.4	69.0	76.6	90.7	98.3	105.8	120.9	136.0	151.0	166.1	181.1	211.1	241.2	271.2
36.0	43.5	45.6	51.3	54.9	62.6	70.3	84.5	92.1	99.7	114.8	129.9	145.0	160.1	175.1	205.2	235.2	265.3
	33.8	36.1	42.2	46.0	53.9	61.8	76.2	83.9	91.5	106.8	121.9	137.1	152.2	167.2	197.4	227.5	257.5
36.3	43.7	45.8	51.6	55.2	62.9	70.6	84.8	92.4	100.0	115.1	130.2	145.3	160.3	175.4	205.5	235.5	265.6
	34.1	36.4	42.4	46.2	54.2	62.0	76.5	84.2	91.8	107.0	122.2	137.3	152.5	167.5	197.7	227.8	257.9
36.5	44.0	46.1	51.8	55.5	63.2	70.9	85.1	92.7	100.3	115.4	130.5	145.6	160.6	175.7	205.8	235.8	265.9
	34.3	36.6	42.7	46.5	54.5	62.3	76.8	84.4	92.1	107.3	122.5	137.6	152.7	167.8	198.0	228.1	258.2
36.6	44.1	46.2	52.0	55.6	63.3	71.0	85.2	92.8	100.4	115.5	130.6	145.7	160.8	175.6	205.9	236.0	266.0
	34.5	36.7	42.8	46.6	54.6	62.4	76.9	84.6	92.2	107.5	122.6	137.8	152.9	168.0	198.1	228.2	258.3
	34.7	37.0	43.1	46.9	54.9	62.7	77.2	84.9	92.5	107.8	122.9	138.1	153.2	168.3	198.4	228.5	258.6
36.9	44.4	46.5	52.2	55.9	63.6	71.3	85.5	93.1	100.7	115.8	130.9	146.0	161.1	176.1	206.2	236.3	266.4
	34.8	37.1	43.2	47.0	55.0	62.8	77.3	85.0	92.7	107.9	123.1	138.2	153.3	168.4	198.6	228.7	258.8
	35.1	37.3	43.5	47.3	55.2	63.1	77.6	85.3	92.9	108.2	123.4	138.5	153.6	168.7	198.9	229.0	259.1
	35.3	37.6	43.7	47.5	55.5	63.4	77.9	85.6	93.2	108.5	123.7	138.8	153.9	169.0	199.2	229.3	259.4
26.9	35.4	37.7	43.8	47.6	55.6	63.5	78.0	85.7	93.4	108.6	123.8	138.9	154.1	169.2	199.3	229.4	259.5
27.2	35.7	38.0	44.1	47.9	55.9	63.8	78.3	86.0	93.6	108.9	124.1	139.2	154.4	169.5	199.6	229.7	259.8
		.90					1.00					1.10			1.15		1.25

* = Non-Standard Lengths

Vee-Rib SHEAVES

SHEAVE NOMENCLATURE is a three part symbol, similar to the belt symbol, but in reverse order, or a number, a letter, and a number, as — 6L48 signified 6 grooves, “L” section, 4.8 inches outside diameter.

SHEAVE TOLERANCES

Radial Run-Out
Total indicator reading should not exceed:
.005″ for diameter under 2.9″
.010″ for diameter 2.9″ to under 10″
For each additional inch of outside diameter over 10″ add 0.0005″

Outside Diameter Tolerances
Under 2.9″ diameter, Tol. ± .010″
2.9″ to 8″ Tol. ± .020″

For each additional inch of outside diameter over 8″ add ± 0.0025″

Axial Run-Out
Total indicator reading at side of groove or edge of rim should not exceed:
.001″ per inch of outside diameter.

STANDARD GROOVE DIMENSIONS

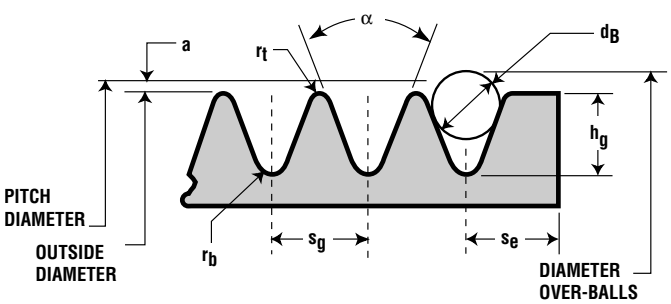

TABLE 9

STANDARD SHEAVE DIAMETERS
(Outside Diameters — Inches)

J				L			M		
	Stock No. of Grooves				Stock No. of Grooves			Stock No. of Grooves	
Diameter	6	10	16	Diameter	6, 8, 10, 12	14, 16, 20	Diameter	6	12, 14 16, 20
.80				3.0	X		7.0	X	
.90				3.2	X		7.4	X	
1.00				3.4	X		7.6	X	
1.06				3.6	X		8.0	X	
1.12				3.8	X		8.4	X	
1.18				4.0	X		8.6	X	
1.25				4.2	X		9.0	X	X
1.32				4.4	X		9.2	X	X
1.40				4.6	X		9.6	X	X
1.50	XX			4.8	X		10.0	X	X
1.60	XX			5.0	X		10.6	X	X
1.70	XX			5.2	X		11.0	X	X
1.80	XX			5.4	X	X	12.0	X	X
1.90	XX			5.6	X	X	13.0	X	X
2.00	X	X		5.8	X	X	14.0	X	X
2.12	X	X		6.0	X	X	15.0	X	X
2.24	X	X		6.2	X	X	16.0	X	X
2.36	X	X		6.4	X	X	18.0	X	X
2.50	X	X	X	7.0	X	X	20.0	X	X
2.65	X	X	X	7.4	X	X	24.0	X	X
2.80	X	X	X	8.0	X	X			
3.00	X	X	X	9.0	X	X	30.0	X	X
3.15	X	X	X	10.0	X	X	36.0	X	X
3.35	X	X	X	12.0	X	X	44.0	X	X
4.50	X	X	X	14.0	X	X			
6.00	X	X	X	16.0	X	X			
8.00	X	X	X	18.0	X	X			
10.60	X	X		20.0	X	X			
14.00		X		24.0	X	X			
19.00		X		30.0	X	X			

X — Stock items
XX — Fixed bore sheaves — stock items

TABLE 10 GROOVE DIMENSIONS AND TOLERANCE FOR SHEAVES

Cross Section	Minimum Recommended Outside Diameter	α Groove Angle ± 0.25 Degrees	S_g*	r_t +0.005 -0.000	2a	r_b	h_g Minimum	d_B ±0.0005	S_e
J	0.80	40	0.092 ±0.001	0.008	0.030	0.015 +0.000 -0.005	0.071	0.0625	0.125 +0.030 -0.015
L	3.00	40	0.185 ±0.002	0.015	0.058	0.015 +0.000 -0.005	0.183	0.1406	0.375 +0.075 -0.030
M	7.00	40	0.370 ±0.003	0.030	0.116	0.030 +0.000 -0.010	0.377	0.2812	0.500 +0.100 -0.040

*Summation of deviations from S_g for all grooves in any one sheave shall not exceed ± 0.010.
Face Width = S_g (Ng -1) + $2S_e$ Ng = Number of grooves

POLY-RIB DRIVE DESIGN
NON-PRE-ENGINEERED TABLES

To design a drive not in PRE-ENGINEERED TABLES you need to know the following four facts:

1. Horsepower requirement of the drive.
2. The rpm of the driveR machine.
3. The rpm of the driveN machine.
4. The approximate center distance for the drive.

To select the best drive for your machine simply follow the step-by-step instructions below:

Step 1. Select the Service Factor

The Service Factor for the drive is selected from Table 4, page 168, according to driveR and driveN machine types and the operating conditions.

Step 2. Determine the Design Horsepower

The Design Horsepower is the result of multiplying the driveR machine horsepower by the Service Factor.

Step 3. Find the Belt Cross-Section

3a The belt cross-section is selected from Table 5, page 168. Locate the driveR design horsepower in the first column of this table, then read across under the proper driveR speed column the belt cross-section to be used for the drive.

3b If the intersection point is located on a shaded are, showing two overlapping cross-sections, design the drive using each belt section and then select the drive with the lower cost.

3c If driveR is an electric motor, check it's horsepower and rpm against the diameter range shown in Table 7, page 169, to make sure the motor sheave will conform to NEMA standards for minimum sheave diameter. If this is not the case, choose a larger diameter sheave or a larger cross-section.

Step 4. Calculate Speed Ratio (R)

4a To compute the speed ratio divide the rpm of the faster sheave by the rpm of the slower sheave.

4b The speed ratio may be calculated by dividing the pitch diameter (D) of the larger sheave by the pitch diameter (d) of the smaller sheave. Thus, R=D/d.

Step 5. Select Sheave Diameters

5.1 When either size sheave is fixed:

5.1a Diameter of the larger sheave is specified. Then the approximate diameter of the small sheave is computed by dividing the diameter of the large sheave by the speed ratio (R) calculated in Step 3. Hence d=D/R.

5.1b The stock size sheaves closest to the approximate diameter of the small or large sheave are selected from Table 9, page 194. Once these are determined, divide the pitch diameter of the large stock sheave by the pitch diameter of the small stock sheave to calculate a revised speed ratio. Using this new speed ratio determine the new driveN speed (rpm) of the drive. Then, proceed with Step 6.

5.2 When neither size sheave is specified:

5.2a Choose a stock size sheave from Table 9, page 194, for small sheave within the recommended range for minimum diameter as specified in Tables 6 or 7, page 169. Select the largest diameter within the space limitation, if any.

5.2b The approximate diameter of the larger sheave may be calculated by multiplying the diameter of the small sheave selected above by the speed ratio of the drive. Thus D=d x R.

5.2c Select a stock size sheave closest to the approximate diameter of the large sheave from Table 9, page 194. Next, compute a new speed ratio by dividing the pitch diameter of the closest stock size large sheave by the pitch diameter of the small sheave chosen in Step 5.2a and calculate the driveN speed using the new speed ratio. Then proceed with Step 6.

Step 6. Determine the Belt Speed (S)

6a Find the pitch diameter by adding value below to the outside diameter you have chosen:

Cross Section	J	L	M
To find P.D., add to O.D.	.030	.058	.116

6b A general formula to calculate the belt speed (S), in feet per minute:

$$S = 0.262 \left(\begin{array}{c}\text{RPM of}\\ \text{either sheave}\end{array}\right) \left(\begin{array}{c}\text{P.D. of}\\ \text{same sheave}\end{array}\right)$$

6c The recommended belt speed range is from 1,000 to 7,500 feet per minute. (For speeds above the latter consult Carlisle Application Engineering Department.) For belt speeds over 6,500 feet per minute, dynamic balancing may be necessary. If smaller sheave diameters are selected for each sheave, then it may possible to reduce the belt speed to the recommended range.

Step 7. Determine the Center Distance (C)

7a If an appropriate center distance is specified, omit this step and proceed with Step 8.

7b A starting center distance can be evaluated using the diameters of large and small sheaves, as follows:

$$C = \frac{D + 3d}{2}; \text{ or } C = D, \text{ whichever is greater}$$

7c If the belt length (L) is specified, an approximate center distance (C) can be calculated by the following formula:

$$C = \frac{L - 1.57(D + d)}{2}$$

Step 8. Select Closest Effective Length

If the center distance, C, is known, an approximate belt effective length can be calculated as follows:

$$L = 2C + 1.57(D + d) + \frac{(D - d)^2}{4C}$$

Select the closest standard belt length listed in Table 3. Then an exact center distance can be calculated from the following formula:

$$C = \frac{K + \sqrt{K^2 - 32(D - d)^2}}{16}$$

L = Belt length (Table 3 gives standard lengths)
C = Center Distance
D = Outside Diameter of large sheave
d = Outside Diameter of small sheave
$K = 4L - 6.28(D + d)$

Step 9. Horsepower Per Rib

Using the appropriate horsepower tables (pages 199-201) select the line of the small sheave rpm and the column of the small pulley diameter and find the base horsepower per rib. Find the “add-on” horsepower value (if the speed ratio is other than one) and add to the base horsepower per rib.

Step 10. Corrected Horsepower Per Rib

To evaluate the Corrected Horsepower per Rib determine the following factors:

10a Fraction $\frac{(D - d)}{C}$

10b Arc of contact correction factor from Table 12, page 198.

10c Length correction factor from Table 11, page 198.

Then: Corrected HP/Rib = (HP/Rib) (Arc Contact Correction Factor) (Length Correction Factor)

Step 11. Required Number of Ribs

The required ribs is computer by dividing the corrected horsepower per rib into the design horsepower:

$$\text{Number of Ribs} = \frac{\text{Design HP}}{\text{Corrected HP/Rib}}$$

Step 12. Installation and Take-Up Allowances

To complete the drive design, it is necessary to provide the installation and take-up allowances for the given belt cross-section and nominal belt length. To install a new drive, the driveR and driveN machine should be mounted in a moveable base in order to vary the center distance of the driver as per Table 8, page 169. Nomenclature for sheave selection is shown on page 194.

Vee-Rib DRIVE DESIGN EXAMPLE

Data: Design a Vee-Rib Belt drive for a diesel powered portable generator. The engine is running 24 hours a day at 1500 rpm where it develops 75 HP. The driveN speed is 1000 rpm and the desired center distance is 38 inches. Due to space limitations, the driveN sheave must be 19 inches or smaller.

Step 1. Select the Service Factor

The service factor for these conditions from Table 4, page 168, is 1.3

Step 2. Determine the Design HP

Design HP = (DriveR HP) (Service Factor)
Design HP = 7.5 x 1.3 = 97.5 HP

Step 3. Findthe Belt Cross-Section

For a design HP of 97.5 at 1500 rpm, from Table 5, page 168, the belt cross-section is an M-section.

Step 4. Calculate the Speed Ratio

$$\text{Speed Ratio} = \frac{\text{RPM of Faster Shaft}}{\text{RPM of Slower Shaft}} = \frac{1500}{1000} = 1.50$$

Step 5. Select Sheave Diameters

The largest standard sheave less than the 19″ is 18.0″ O.D.

$$\text{DriveR O.D.} = \frac{\text{DriveN O.D.}}{\text{Speed Ratio}} = \frac{18.0}{1.50} = 12.0 \text{ O.D.}$$

Step 6. Determine the Belt Speed

S = .262 x 1500 x 12.116 = 4762 Ft/Min

Step 7. Determine the Center Distance

The desired center distance is given as 38 inches.

Step 8. Select Closest Effective Length

$$L = 2C + 1.57\,(D + d) + \frac{(D - d)^2}{4C} = 76 + 1.57(30) + \frac{(6)^2}{152} = 76 + 47.1 + .24 = 123.34''$$

The closest standard effective length is 123.0 inches.

$$C = \frac{K + \sqrt{K^2 - 32\,(D - d)^2}}{16} = \frac{303.6 + \sqrt{303.6^2 - 32(18 - 12)^2}}{16} = \frac{303.6 + 301.7}{16} = 37.83''$$

Step 9. Horsepower Per Rib

The rated HP per rib from the table is 17.8 and the add-on HP for a 1.50 speed ratio is 1.01; therefore the basic HP is 17.8 + 1.01 = 18.81

Step 10. Corrected Horsepower Per Rib

$$\text{Fraction } \frac{D-d}{C} = \frac{6}{37.8} = .16$$

From Table 12, page 198, the arc of contract correction factor would be approximately .97.
The length correction factor from Table 11, page 198, is .94.
Then: Corrected Hp per rib = (18.81)(.97)(.94) = 17.17 HP.

Step 11. Required Number of Ribs

$$\text{Belt Width} = \frac{97.5}{17.15} = 5.69 \text{ or 6 ribs}$$

Step 12.

To provide for installation and take-up the center distance must be adjustable from (37.83 - 1.7) to (37.83 - 1.7) or 36.13 to 39.53.

SUMMARY: The drive will consist of a 1230M6 Vee-Rib Belt which is 2¼″ wide. The driveR sheave is a 6M120 and the driveN sheave is a 6M180 mounted with the center distance adjustable from 36.13 to 39.53″. (Sheave nomenclature is shown on page 194.)

Vee-Rib HORSEPOWER CORRECTION FACTORS

TABLE 11
LENGTH CORRECTION FACTORS

Belt Length Effect on HP Ratings			
Inches	Multiply HP Table Rating by		
	J	L	M
18	.83		
19-21	.85		
22-26	.89		
27-30	.92		
31-34	.95		
35-38	.98		
39-42	1.00		
43-47	1.02		
48-53	1.05	.89	
54-58	1.07	.91	
59-65	1.09	.93	
66-74	1.12	.96	
75-84	1.16	.98	.87
85-92	1.18	1.02	.88
93-97	1.19	1.02	.89
98-104	1.20	1.04	.90
105-111		1.05	.91
112-119		1.07	.93
120-127		1.08	.94
128-139		1.10	.96
140-154		1.12	.98
155-172		1.14	1.00
173-190		1.17	1.03
191-205		1.19	1.05
206-227		1.21	1.06
228-256		1.24	1.09
257-286			1.12
287-316			1.14
317-332			1.16
333-376			1.18
377-406			1.20
407-451			1.22
452-511			1.25
512-571			1.28
572 & up			1.30

TABLE 12
ARC OF CONTACT CORRECTION FACTORS

Arc of Contact Effect on HP Ratings		
$\frac{D - d}{C}$	Degrees	Multiply HP Table Rating By (K_θ)
	230	1.11
	220	1.09
	210	1.07
	200	1.05
	190	1.02
.00	180	1.00
.17	170	.97
.33	160	.94
.50	150	.91
.67	140	.88
.83	130	.84
1.00	120	.80
1.17	110	.76
1.33	100	.72

The values in the table above were obtained from the exact formula shown below:

Arc of Contact on the small sheave may be determined by the formulas:

Exact Formula:

$$\text{Arc of Contact (in degrees)} = 2\cos^{-1}\left(\frac{D - d}{2C}\right)$$

Approximate formula:

$$\text{Arc of Contact (in degrees)} = 180 - \frac{(D - d)60}{C}$$

Where:

D = Effective outside diameter of large sheave (inches)

d = Effective outside diameter of small sheave (inches)

C = Center distance (inches)

Vee-Rib GENERAL SERVICE HORSEPOWER RATINGS — J

RPM of Faster Shaft	RATED HORSEPOWER PER RIB FOR SMALL SHEAVE OUTSIDE DIAMETER (INCHES)																									Additional HP Per Rib For Speed Ratio										RPM of Faster Shaft
	.80	.90	1.0	1.1	1.2	1.3	1.4	1.5	1.6	1.7	1.8	1.9	2.0	2.2	2.4	2.6	2.8	3.0	3.25	3.5	3.75	4.0	4.5	5.0	5.5	6.0	1.00 to 1.01	1.02 to 1.04	1.05 to 1.08	1.09 to 1.12	1.13 to 1.18	1.19 to 1.24	1.25 to 1.34	1.35 to 1.51	1.52 to 1.99	2.00 and Over	
950	.02	.04	.05	.06	.07	.08	.10	.11	.12	.13	.14	.15	.17	.19	.21	.23	.26	.28	.31	.33	.36	.39	.44	.49	.54	.59	.00	.00	.00	.00	.00	.01	.01	.01	.01	.01	950
1160	.03	.04	.06	.07	.08	.10	.11	.13	.14	.16	.17	.18	.20	.22	.25	.28	.30	.33	.36	.40	.43	.46	.52	.59	.65	.71	.00	.00	.00	.00	.01	.01	.01	.01	.01	.01	1160
1425	.03	.05	.06	.08	.10	.12	.13	.15	.17	.18	.20	.22	.23	.27	.30	.33	.36	.40	.44	.47	.51	.55	.63	.70	.77	.85	.00	.00	.00	.01	.01	.01	.01	.01	.01	.02	1425
1750	.03	.05	.07	.10	.12	.14	.16	.18	.20	.22	.24	.26	.28	.32	.36	.40	.44	.47	.52	.57	.61	.66	.75	.84	.92	1.01	.00	.00	.00	.01	.01	.01	.01	.02	.02	.02	1750
2850	.04	.07	.10	.14	.17	.20	.23.	.27	.30	.33	.36	.39	.42	.48	.54	.60	.66	.72	.79	.86	.93	.99	1.12	1.25	1.37	1.48	.00	.00	.01	.01	.01	.02	.02	.03	.03	.03	2850
3450	.04	.08	.12	.16	.20	.23	.27	.31	.35	.38	.42	.46	.49	.56	.63	.70	.77	.84	.92	1.00	1.08	1.15	1.30	1.44	1.57	1.69	.00	.00	.01	.01	.02	.02	.03	.03	.04	.04	3450
100	.01	.01	.01	.01	.01	.01	.01	.02	.02	.02	.02	.02	.02	.03	.03	.03	.04	.04	.04	.05	.05	.05	.06	.07	.07	.08	.00	.00	.00	.00	.00	.00	.00	.00	.00	.00	100
200	.01	.01	.01	.02	.02	.02	.03	.03	.03	.03	.04	.04	.04	.05	.05	.06	.06	.07	.08	.08	.09	.10	.11	.12	.14	.15	.00	.00	.00	.00	.00	.00	.00	.00	.00	.00	200
300	.01	.02	.02	.02	.03	.03	.04	.04	.04	.05	.05	.06	.06	.07	.08	.09	.09	.10	.11	.12	.13	.14	.16	.18	.19	.21	.00	.00	.00	.00	.00	.00	.00	.00	.00	.00	300
400	.01	.02	.02	.03	.04	.04	.05	.05	.06	.06	.07	.07	.08	.09	.10	.11	.12	.13	.14	.15	.17	.18	.20	.23	.25	.28	.00	.00	.00	.00	.00	.00	.00	.00	.00	.00	400
500	.02	.02	.03	.04	.04	.05	.06	.06	.07	.08	.08	.09	.10	.11	.12	.13	.15	.16	.17	.19	.20	.22	.25	.28	.31	.34	.00	.00	.00	.00	.00	.00	.00	.00	.01	.01	500
600	.02	.03	.03	.04	.05	.06	.07	.07	.08	.09	.10	.10	.11	.13	.14	.16	.17	.19	.20	.22	.24	.26	.29	.33	.36	.40	.00	.00	.00	.00	.00	.00	.00	.01	.01	.01	600
700	.02	.03	.04	.05	.06	.07	.07	.08	.09	.10	.11	.12	.13	.14	.16	.18	.20	.21	.23	.25	.27	.29	.34	.38	.41	.45	.00	.00	.00	.00	.00	.00	.01	.01	.01	.01	700
800	.02	.03	.04	.05	.06	.07	.08	.09	.10	.11	.12	.13	.14	.16	.18	.20	.22	.24	.26	.29	.31	.33	.38	.42	.47	.51	.00	.00	.00	.00	.00	.01	.01	.01	.01	.01	800
900	.02	.03	.05	.06	.07	.08	.09	.10	.11	.13	.14	.15	.16	.18	.20	.22	.24	.26	.29	.32	.34	.37	.42	.47	.52	.57	.00	.00	.00	.00	.00	.01	.01	.01	.01	.01	900
1000	.02	.04	.05	.06	.08	.09	.10	.11	.12	.14	.15	.16	.17	.20	.22	.24	.27	.29	.32	.35	.38	.40	.46	.51	.57	.62	.00	.00	.00	.00	.01	.01	.01	.01	.01	.01	1000
1100	.03	.04	.05	.07	.08	.09	.11	.12	.14	.15	.16	.17	.19	.21	.24	.27	.29	.32	.35	.38	.41	.44	.50	.56	.62	.68	.00	.00	.00	.00	.01	.01	.01	.01	.01	.01	1100
1200	.03	.04	.06	.07	.09	.10	.12	.13	.15	.16	.17	.19	.20	.23	.26	.29	.31	.34	.37	.41	.44	.47	.54	.60	.67	.73	.00	.00	.00	.00	.01	.01	.01	.01	.01	.01	1200
1300	.03	.04	.06	.08	.09	.11	.12	.14	.16	.17	.19	.20	.22	.25	.28	.31	.34	.37	.40	.44	.47	.51	.58	.65	.72	.78	.00	.00	.00	.00	.01	.01	.01	.01	.01	.01	1300
1400	.03	.05	.06	.08	.10	.12	.13	.15	.17	.18	.20	.21	.23	.26	.30	.33	.36	.39	.43	.47	.51	.54	.62	.69	.76	.83	.00	.00	.00	.01	.01	.01	.01	.01	.01	.02	1400
1500	.03	.05	.07	.09	.10	.12	.14	.16	.18	.19	.21	.23	.25	.28	.31	.35	.38	.41	.46	.50	.54	.58	.66	.73	.81	.88	.00	.00	.00	.01	.01	.01	.01	.01	.02	.02	1500
1600	.03	.05	.07	.09	.11	.13	.15	.17	.18	.20	.22	.24	.26	.30	.33	.37	.40	.44	.48	.52	.57	.61	.69	.78	.86	.93	.00	.00	.00	.01	.01	.01	.01	.01	.02	.02	1600
1700	.03	.05	.07	.09	.11	.13	.15	.17	.19	.21	.23	.25	.27	.31	.35	.39	.42	.46	.51	.55	.60	.64	.73	.82	.90	.98	.00	.00	.00	.01	.01	.01	.01	.02	.02	.02	1700
1800	.03	.05	.08	.10	.12	.14	.16	.18	.20	.22	.25	.27	.29	.33	.37	.41	.45	.48	.53	.58	.63	.67	.77	.86	.95	1.03	.00	.00	.00	.01	.01	.01	.01	.02	.02	.02	1800
1900	.03	.06	.08	.10	.12	.15	.17	.19	.21	.23	.26	.28	.30	.34	.38	.43	.47	.51	.56	.61	.66	.71	.80	.90	.99	1.08	.00	.00	.00	.01	.01	.01	.01	.02	.02	.02	1900
2000	.03	.06	.08	.11	.13	.15	.18	.20	.22	.25	.27	.29	.31	.36	.40	.44	.49	.53	.58	.64	.69	.74	.84	.94	1.03	1.13	.00	.00	.01	.01	.01	.01	.02	.02	.02	.02	2000
2200	.04	.06	.09	.11	.14	.17	.19	.22	.24	.27	.29	.31	.34	.39	.44	.48	.53	.58	.63	.69	.75	.80	.91	1.01	1.12	1.22	.00	.00	.01	.01	.01	.01	.02	.02	.02	.03	2200
2400	.04	.06	.09	.12	.15	.18	.20	.23	.26	.29	.31	.34	.36	.42	.47	.52	.57	.62	.68	.74	.80	.86	.98	1.09	1.20	1.30	.00	.00	.01	.01	.01	.02	.02	.02	.02	.03	2400
2600	.04	.07	.10	.13	.16	.19	.22	.25	.28	.30	.33	.36	.39	.45	.50	.56	.61	.66	.73	.79	.86	.92	1.04	1.16	1.28	1.39	.00	.00	.01	.01	.01	.02	.02	.02	.03	.03	2600
2800	.04	.07	.10	.14	.17	.20	.23	.26	.29	.32	.35	.38	.41	.47	.53	.59	.65	.71	.78	.84	.91	.98	1.11	1.23	1.35	1.47	.00	.00	.01	.01	.01	.02	.02	.02	.02	.03	2800
3000	.04	.07	.11	.14	.18	.21	.24	.28	.31	.34	.38	.41	.44	.50	.56	.63	.69	.75	.82	.89	.96	1.03	1.17	1.30	1.42	1.54	.00	.00	.01	.01	.02	.02	.02	.03	.03	.03	3000
3200	.04	.08	.11	.15	.19	.22	.26	.29	.33	.36	.40	.43	.46	.53	.60	.66	.73	.79	.87	.94	1.02	1.09	1.23	1.36	1.49	1.61	.00	.00	.01	.01	.02	.02	.02	.03	.03	.04	3200
3400	.04	.08	.12	.16	.19	.23	.27	.31	.34	.38	.42	.45	.49	.56	.63	.69	.76	.83	.91	.99	1.07	1.14	1.29	1.43	1.56	1.68	.00	.00	.01	.01	.02	.02	.03	.03	.03	.04	3400
3600	.04	.08	.12	.16	.20	.24	.28	.32	.36	.40	.44	.47	.51	.58	.66	.73	.80	.87	.95	1.03	1.11	1.19	1.34	1.48	1.62	1.74	.00	.00	.01	.01	.02	.02	.03	.03	.04	.04	3600
3800	.04	.08	.13	.17	.21	.25	.29	.33	.37	.41	.45	.49	.53	.61	.69	.76	.83	.91	.99	1.08	1.16	1.24	1.40	1.54	1.67	1.79	.00	.00	.01	.01	.02	.02	.03	.03	.04	.04	3800
4000	.04	.09	.13	.17	.22	.26	.31	.35	.39	.43	.47	.51	.56	.64	.71	.79	.87	.94	1.03	1.12	1.21	1.29	1.45	1.59	1.73	1.84	.00	.01	.01	.02	.02	.03	.03	.04	.04	.05	4000
4500	.04	.09	.14	.19	.24	.29	.33	.38	.43	.47	.52	.57	.61	.70	.78	.87	.95	1.03	1.13	1.22	1.31	1.40	1.56	1.71	**1.84**	**1.95**	.00	.01	.01	.02	.02	.03	.03	.04	.05	.05	4500
5000	.04	.09	.15	.20	.26	.31	.36	.41	.46	.51	.56	.61	.66	.76	.85	.94	1.03	1.12	1.22	1.32	1.41	1.50	1.66	**1.81**	**1.92**	**2.01**	.00	.01	.01	.02	.03	.03	.04	.04	.05	.06	5000
5500	.04	.10	.16	.22	.27	.33	.39	.44	.50	.55	.61	.66	.71	.81	.91	1.01	1.10	1.19	1.30	1.40	1.50	1.59	**1.75**	**1.88**	**1.97**	**2.04**	.00	.01	.01	.02	.03	.03	.04	.05	.06	.06	5500
6000	.04	.10	.16	.23	.29	.35	.41	.47	.53	.59	.65	.70	.76	.87	.97	1.07	1.17	1.26	1.37	1.48	1.57	1.66	**1.81**	**1.92**	**1.99**	**2.02**	.00	.01	.02	.02	.03	.04	.05	.05	.06	.07	6000
6500	.03	.10	.17	.24	.31	.37	.44	.50	.56	.62	.69	.75	.80	.92	1.03	1.13	1.23	1.33	1.44	1.54	1.63	**1.72**	**1.85**	**1.94**	**1.97**		.00	.01	.02	.02	.03	.04	.05	.06	.07	.07	6500
7000	.03	.11	.18	.25	.32	.39	.46	.53	.59	.66	.72	.78	.85	.96	1.08	1.19	1.29	1.38	1.49	1.59	**1.68**	**1.76**	**1.87**	**1.92**			.00	.01	.02	.03	.04	.04	.05	.06	.07	.08	7000
7500	.03	.11	.18	.26	.34	.41	.48	.55	.62	.69	.76	.82	.89	1.01	1.12	1.23	1.34	1.43	1.54	**1.63**	**1.71**	**1.78**	**1.86**	**1.87**			.00	.01	.02	.03	.04	.05	.06	.07	.08	.09	7500
8000	.02	.11	.19	.27	.35	.43	.50	.58	.65	.72	.79	.86	.92	1.05	1.17	1.28	1.38	1.47	**1.58**	**1.66**	**1.73**	**1.78**	**1.83**				.00	.01	.02	.03	.04	.05	.06	.07	.08	.09	8000
8500	.02	.11	.19	.28	.36	.44	.52	.60	.67	.75	.82	.89	.96	1.08	1.20	1.32	1.42	**1.50**	**1.60**	**1.68**	**1.74**	**1.77**					.00	.01	.02	.03	.04	.05	.06	.08	.09	.10	8500
9000	.02	.11	.20	.29	.37	.46	.54	.62	.70	.77	.85	.92	.99	1.12	1.24	1.35	**1.44**	**1.53**	**1.61**	**1.68**	**1.72**	**1.74**					.00	.01	.02	.03	.05	.06	.07	.08	.09	.10	9000
9500	.01	.11	.20	.29	.38	.47	.55	.64	.72	.80	.87	.94	1.01	1.15	1.26	**1.37**	**1.46**	**1.54**	**1.62**	**1.67**	**1.69**	**1.68**					.00	.01	.02	.04	.05	.06	.07	.08	.10	.11	9500
10000	.01	.11	.20	.30	.39	.48	.57	.66	.74	.82	.89	.97	1.04	1.17	**1.29**	**1.39**	**1.48**	**1.53**	**1.61**	**1.64**	**1.64**						.00	.01	.03	.04	.05	.06	.08	.09	.10	.11	10000

Bold indicates belt speed above 6500 feet per minute. Special sheaves may be necessary. Consult Carlisle.

Vee-Rib GENERAL SERVICE HORSEPOWER RATINGS — L

RPM of Faster Shaft	RATED HORSEPOWER PER RIB FOR SMALL SHEAVE OUTSIDE DIAMETER (INCHES)																																					Additional HP Per Rib for Speed Ratio										RPM of Faster Shaft
	3.0	3.2	3.4	3.6	3.8	4.0	4.2	4.4	4.6	4.8	5.0	5.2	5.4	5.6	5.8	6.0	6.2	6.4	6.6	6.8	7.0	7.2	7.4	7.6	7.8	8.0	8.5	9.0	9.5	10.0	11.0	12.0	13.0	14.0	1.00 to 1.01	1.02 to 1.04	1.05 to 1.08	1.09 to 1.12	1.13 to 1.18	1.19 to 1.24	1.25 to 1.34	1.35 to 1.51	1.52 to 1.99	2.00 and Over	
575	.48	.55	.61	.68	.75	.81	.88	.94	1.01	1.07	1.14	1.20	1.27	1.33	1.39	1.46	1.52	1.58	1.64	1.71	1.77	1.83	1.89	1.95	2.01	2.08	2.23	2.38	2.53	2.68	2.97	3.27	3.55	3.84	.00	.01	.02	.03	.04	.04	.05	.06	.07	.08	575
690	.55	.63	.71	.79	.87	.95	1.02	1.10	1.18	1.25	1.33	1.40	1.48	1.55	1.63	1.70	1.78	1.85	1.92	2.00	2.07	2.14	2.22	2.29	2.36	2.43	2.61	2.79	2.96	3.14	3.48	3.82	4.16	4.49	.00	.01	.02	.03	.04	.05	.06	.07	.08	.09	690
725	.58	.66	.74	.82	.90	.99	1.07	1.15	1.23	1.31	1.39	1.46	1.54	1.62	1.70	1.78	1.85	1.93	2.01	2.08	2.16	2.24	2.31	2.39	2.46	2.54	2.72	2.91	3.09	3.28	3.64	3.99	4.34	4.68	.00	.01	.02	.03	.04	.06	.07	.08	.09	10.	725
870	.66	.76	.86	.95	1.05	1.15	1.24	1.34	1.43	1.52	1.62	1.71	1.80	1.89	1.99	2.08	2.17	2.26	2.35	2.44	2.53	2.62	2.71	2.79	2.88	2.97	3.17	3.40	3.62	3.83	4.25	4.66	5.06	5.45	.00	.01	.03	.04	.05	.07	.08	.09	.11	.12	870
950	.71	.82	.92	1.02	1.13	1.23	1.33	1.44	1.54	1.64	1.74	1.84	1.94	2.04	2.14	2.24	2.34	2.43	2.53	2.63	2.72	2.82	2.92	3.01	3.11	3.20	3.44	3.67	3.90	4.12	4.57	5.01	5.44	5.86	.00	.01	.03	.04	.06	.07	.09	.10	.12	.13	950
1160	.83	.95	1.08	1.20	1.33	1.45	1.57	1.70	1.82	1.94	2.06	2.18	2.30	2.41	2.53	2.65	2.76	2.88	3.00	3.11	3.22	3.34	3.45	3.56	3.68	3.79	4.06	4.33	4.60	4.87	5.39	5.89	6.38	6.85	.00	.02	.04	.05	.07	.09	.11	.12	.14	.16	1160
1425	.96	1.11	1.27	1.42	1.56	1.71	1.86	2.01	2.15	2.29	2.44	2.58	2.72	2.86	3.00	3.14	3.28	3.42	3.55	3.69	3.82	3.96	4.09	4.22	4.35	4.48	4.80	5.12	5.43	5.74	6.33	6.89	7.43	7.94	.00	.02	.04	.07	.09	.11	.13	.15	.17	.20	1425
1750	1.12	1.30	1.48	1.66	1.84	2.02	2.19	2.36	2.54	2.71	2.88	3.05	3.21	3.38	3.54	3.71	3.87	4.03	4.19	4.35	4.51	4.66	4.81	4.97	5.12	5.27	5.64	6.00	6.35	6.68	7.33	7.94	8.50	9.01	.00	.03	.05	.08	.11	.13	.16	.19	.21	.24	1750
2850	1.56	1.84	2.11	2.38	2.64	2.90	3.16	3.41	3.66	3.91	4.15	4.39	4.63	4.86	5.08	5.31	5.52	5.74	5.95	6.15	6.35	6.55	6.74	6.93	7.11	7.28	7.70	**8.09**	**8.44**	**8.75**	**9.25**	**9.39**	**9.75**		.00	.04	.09	.13	.17	.22	.26	.30	.35	.39	2850
3450	1.75	2.07	2.38	2.69	3.00	3.29	3.59	3.87	4.15	4.43	4.70	4.96	5.21	5.46	5.70	5.94	6.17	6.39	6.60	6.81	7.01	7.20	**7.38**	**7.56**	**7.72**	**7.88**	**8.24**	**8.53**	**8.77**	**8.94**	**9.08**				.00	.05	.11	.16	.21	.26	.32	.37	.42	.47	3450
100	.12	.13	.14	.16	.17	.19	.20	.21	.23	.24	.25	.26	.28	.29	.30	.32	.33	.34	.36	.37	.38	.39	.41	.42	.43	.44	.48	.51	.54	.57	.63	.69	.75	.81	.00	.00	.00	.00	.01	.01	.01	.01	.01	.01	100
200	.21	.23	.26	.28	.31	.33	.36	.38	.41	.43	.46	.48	.51	.53	.56	.58	.61	.63	.65	.68	.70	.73	.75	.77	.80	.82	.88	.94	1.00	1.05	1.17	1.28	1.40	1.51	.00	.00	.01	.01	.01	.02	.02	.02	.02	.03	200
300	.29	.32	.36	.40	.43	.47	.51	.54	.58	.61	.65	.69	.72	.76	.79	.83	.86	.90	.93	.97	1.00	1.04	1.07	1.10	1.14	1.17	1.26	1.34	1.43	1.51	1.68	1.84	2.00	2.17	.00	.00	.01	.01	.02	.02	.03	.03	.04	.04	300
400	.36	.41	.46	.50	.55	.60	.65	.69	.74	.79	.83	.88	.93	.97	1.02	1.06	1.11	1.15	1.20	1.24	1.29	1.33	1.38	1.42	1.47	1.51	1.62	1.73	1.84	1.95	2.16	2.38	2.59	2.79	.00	.01	.01	.02	.02	.03	.04	.04	.05	.05	400
500	.43	.49	.55	.61	.67	.72	.78	.84	.90	.95	1.01	1.07	1.12	1.18	1.23	1.29	1.35	1.40	1.46	1.51	1.57	1.62	1.67	1.73	1.78	1.84	1.97	2.11	2.24	2.37	2.63	2.89	3.15	3.40	.00	.01	.02	.02	.03	.04	.05	.05	.06	.07	500
600	.50	.57	.64	.71	.77	.84	.91	.98	1.05	1.11	1.18	1.25	1.31	1.38	1.44	1.51	1.58	1.64	1.71	1.77	1.83	1.90	1.96	2.03	2.09	2.15	2.31	2.47	2.63	2.78	3.09	3.39	3.69	3.98	.00	.01	.02	.03	.04	.05	.05	.06	.07	.08	600
700	.56	.64	.72	.80	.88	.96	1.04	1.11	1.19	1.27	1.34	1.42	1.50	1.57	1.65	1.72	1.80	1.87	1.95	2.02	2.10	2.17	2.24	2.32	2.39	2.46	2.64	2.82	3.00	3.18	3.53	3.87	4.21	4.54	.00	.01	.02	.03	.04	.05	.06	.07	.09	.10	700
800	.62	.71	.80	.89	.98	1.07	1.16	1.25	1.33	1.42	1.51	1.59	1.68	1.76	1.85	1.93	2.02	2.10	2.19	2.27	2.35	2.43	2.52	2.60	2.68	2.76	2.97	3.17	3.37	3.56	3.95	4.34	4.72	5.09	.00	.01	.02	.04	.05	.06	.07	.09	.10	.11	800
900	.68	.78	.88	.98	1.08	1.18	1.28	1.37	1.47	1.57	1.66	17.6	1.85	1.95	2.04	2.14	2.23	2.32	2.42	2.51	2.60	2.69	2.78	2.88	2.97	3.06	3.28	3.50	3.72	3.94	4.37	4.79	5.20	5.60	.00	.01	.03	.04	.05	.07	.08	.10	.11	.12	900
1000	.74	.85	.96	1.07	1.18	1.28	1.39	1.50	1.61	1.71	1.82	1.92	2.03	2.12	2.23	2.34	2.44	2.54	2.64	2.74	2.85	2.95	3.05	3.15	3.24	3.34	3.59	3.83	4.07	4.31	4.77	5.23	5.67	6.10	.00	.02	.03	.05	.06	.08	.09	.11	.12	.14	1000
1100	.79	.91	1.03	1.15	1.27	1.39	1.51	1.62	1.74	1.85	1.97	2.08	2.20	2.31	2.42	2.53	2.64	2.75	2.87	2.97	3.08	3.19	3.30	3.41	3.52	3.62	3.89	4.15	4.41	4.66	5.16	5.65	6.12	6.58	.00	.02	.03	.05	.07	.08	.10	.12	.13	.15	1100
1200	.85	.98	1.11	1.24	1.36	1.49	1.62	1.74	1.87	1.99	2.12	2.24	2.36	2.48	2.60	2.72	2.84	2.96	3.08	3.20	3.32	3.43	3.55	3.67	3.78	3.89	4.18	4.46	4.73	5.00	5.53	6.05	6.55	7.03	.00	.02	.04	.05	.07	.09	.11	.13	.15	.16	1200
1300	.90	1.04	1.18	1.32	1.45	1.59	1.73	1.86	2.00	2.13	2.26	2.39	2.52	2.65	2.78	2.91	3.04	3.17	3.29	3.42	3.55	3.67	3.79	3.92	4.04	4.16	4.46	4.76	5.05	5.34	5.90	6.44	6.95	7.45	.00	.02	.04	.06	.08	.10	.12	.14	.16	.18	1300
1400	.95	1.10	1.25	1.40	1.54	1.69	1.83	1.98	2.12	2.26	2.40	2.54	2.68	2.82	2.96	3.10	3.23	3.37	3.50	3.64	3.77	3.90	4.03	4.16	4.29	4.42	4.74	5.05	5.36	5.66	6.24	6.80	7.34	7.85	.00	.02	.04	.06	.09	.11	.13	.15	.17	.19	1400
1500	1.00	1.16	1.32	1.47	1.63	1.78	1.94	2.09	2.24	2.39	2.54	2.69	2.84	2.98	3.13	3.28	3.42	3.56	3.70	3.85	3.99	4.12	4.26	4.40	4.54	4.67	5.00	5.33	5.65	5.97	6.57	7.15	7.70	8.22	.00	.02	.05	.07	.09	.11	.14	.16	.18	.21	1500
1600	1.05	1.22	1.38	1.55	1.71	1.88	2.04	2.20	2.30	2.52	2.68	2.84	2.99	3.15	3.30	3.45	3.60	3.75	3.90	4.05	4.20	4.34	4.49	4.63	4.77	4.92	5.26	5.60	5.94	6.26	6.89	7.48	8.04	8.56	.00	.02	.05	.07	.10	.12	.15	.17	.20	.22	1600
1700	1.10	1.27	1.45	1.62	1.80	1.97	2.14	2.31	2.48	2.65	2.81	2.98	3.14	3.30	3.46	3.62	3.78	3.94	4.10	4.25	4.40	4.56	4.71	4.86	5.01	5.15	5.51	5.87	6.21	6.55	7.19	7.79	8.35	8.87	.00	.03	.05	.08	.10	.13	.16	.18	.21	.23	1700
1800	1.14	1.33	1.51	1.70	1.88	2.06	2.24	2.42	2.59	2.77	2.94	3.12	3.29	3.46	3.62	3.79	3.96	4.12	4.28	4.45	4.61	4.76	4.92	5.08	5.23	5.38	5.76	6.12	6.48	6.82	7.47	8.08	8.64	**9.15**	.00	.03	.05	.08	.11	.14	.16	.19	.22	.25	1800
1900	1.19	1.38	1.58	1.77	1.96	2.15	2.34	2.52	2.71	2.89	3.07	3.25	3.43	3.61	3.78	3.96	4.13	4.30	4.47	4.63	4.80	4.96	5.13	5.29	5.45	5.60	5.99	6.36	6.73	7.08	7.74	8.35	8.90	**9.39**	.00	.03	.06	.09	.12	.14	.17	.20	.23	.26	1900
2000	1.23	1.44	1.64	1.84	2.04	2.24	2.43	2.62	2.82	3.01	3.20	3.38	3.57	3.75	3.94	4.12	4.29	4.47	4.65	4.82	4.99	5.16	5.33	5.49	5.66	5.82	6.21	6.60	6.96	7.32	7.99	8.59	**9.13**	**9.60**	.00	.03	.06	.09	.12	.15	.18	.21	.24	.27	2000
2100	1.27	1.49	1.70	1.91	2.11	2.32	2.52	2.73	2.93	3.12	3.32	3.51	3.71	3.90	4.09	4.27	4.46	4.64	4.82	5.00	5.17	5.35	5.52	5.69	5.86	6.02	6.43	6.82	7.19	7.55	8.21	**8.61**	**9.33**	**9.77**	.00	.03	.06	.10	.13	.16	.19	.22	.26	.29	2100
2200	1.35	1.54	1.76	1.97	2.19	2.40	2.61	2.82	3.03	3.24	3.44	3.64	3.84	4.04	4.23	4.42	4.61	4.80	4.99	5.17	5.35	5.53	5.71	5.88	6.05	6.22	6.63	7.03	7.40	7.76	8.42	**9.00**	**9.50**	**9.90**	.00	.03	.07	.10	.13	.17	.20	.23	.27	.30	2200
2300	1.36	1.59	1.81	2.04	2.26	2.48	2.70	2.92	3.14	3.35	3.56	3.76	3.97	4.17	4.37	4.57	4.77	4.96	5.15	5.34	5.52	5.71	5.89	6.06	6.24	6.41	6.83	7.22	7.60	7.96	**8.61**	**9.17**	**9.64**	**9.99**	.00	.04	.07	.11	.14	.18	.21	.25	.28	.32	2300
2400	1.40	1.63	1.87	2.10	2.34	2.56	2.79	3.01	3.24	3.46	3.67	3.89	4.10	4.31	4.51	4.72	4.92	5.11	5.31	5.50	5.69	5.88	6.06	6.24	6.42	6.59	7.01	7.41	7.79	8.14	**8.78**	**9.31**	**9.74**	**10.0**	.00	.04	.07	.11	.15	.18	.22	.26	.29	.33	2400
2500	1.43	1.68	1.93	2.17	2.41	2.64	2.88	3.11	3.34	3.56	3.78	4.00	4.22	4.43	4.65	4.85	5.06	5.26	5.46	5.66	5.85	6.04	6.22	6.41	6.59	6.76	7.18	7.58	7.96	8.31	**8.93**	**9.43**	**9.81**	**10.1**	.00	.04	.08	.11	.15	.19	.23	.27	.30	.34	2500
2600	1.47	1.73	1.98	2.23	2.48	2.72	2.96	3.20	3.43	3.66	3.89	4.12	4.34	4.56	4.78	4.99	5.20	5.40	5.61	5.81	6.00	6.19	6.38	6.57	6.75	6.92	7.35	7.74	8.11	**8.46**	**9.05**	**9.51**	**9.84**	**10.0**	.00	.04	.08	.12	.16	.20	.24	.28	.32	.36	2600
2700	1.51	1.77	2.03	2.29	2.54	2.79	3.04	3.28	3.53	3.76	4.00	4.23	4.46	4.68	4.90	5.12	5.33	5.54	5.75	8.95	6.15	6.34	6.53	6.72	6.90	7.08	7.50	7.89	**6.25**	**8.39**	**9.15**	**9.57**	**9.84**	**9.94**	.00	.04	.08	.12	.16	.21	.25	.29	.33	.37	2700
2800	1.54	1.82	2.08	2.35	2.61	2.87	3.12	3.37	3.62	3.86	4.10	4.34	4.57	4.80	5.02	5.24	5.46	5.67	5.88	6.09	6.29	6.48	6.67	6.86	7.04	7.22	7.64	**8.02**	**8.38**	**8.70**	**9.23**	**9.59**	**9.79**		.00	.04	.09	.13	.17	.21	.26	.30	.34	.38	2800
2900	1.58	1.86	2.13	2.40	2.67	2.94	3.20	3.45	3.71	3.96	4.20	4.44	4.68	4.91	5.14	5.37	5.59	5.80	6.01	6.22	6.42	6.61	6.81	6.99	7.17	7.35	7.76	**8.14**	**8.49**	**8.79**	**9.28**	**9.59**	**9.71**		.00	.04	.09	.13	.18	.22	.27	.31	.35	.40	2900
3000	1.61	1.90	2.18	2.46	2.73	3.01	3.27	3.54	3.79	4.05	4.30	4.54	4.79	5.02	5.25	5.48	5.70	5.92	6.13	6.34	6.54	6.74	6.93	7.12	7.30	7.47	**7.88**	**8.25**	**8.58**	**8.67**	**9.30**	**9.55**			.00	.05	.09	.14	.18	.23	.27	.32	.37	.41	3000
3100	1.65	1.94	2.23	2.51	2.80	3.07	3.35	3.61	3.88	4.14	4.39	4.64	4.89	5.13	5.36	5.59	5.82	6.04	6.25	6.46	6.66	6.86	7.05	7.23	7.41	**7.58**	**7.98**	**8.34**	**8.65**	**8.92**	**9.20**	**9.47**			.00	.05	.09	.14	.19	.24	.28	.33	.38	.43	3100
3200	1.68	1.98	2.28	2.57	2.86	3.14	3.42	3.69	3.96	4.22	4.48	4.74	4.99	5.23	5.47	5.70	5.92	6.14	6.36	6.57	6.77	6.97	7.15	**7.34**	**7.51**	**7.68**	**8.07**	**8.41**	**8.71**	**8.95**	**9.28**				.00	.05	.10	.15	.20	.24	.29	.34	.39	.44	3200
3300	1.71	2.02	2.32	2.62	2.91	3.20	3.49	3.76	4.04	4.31	4.57	4.83	5.08	5.33	5.57	5.80	6.03	6.25	6.46	6.67	6.87	7.07	**7.25**	**7.43**	**7.60**	**7.77**	**8.35**	**8.47**	**8.75**	**8.96**	**9.27**				.00	.05	.10	.15	.20	.25	.30	.35	.40	.45	3300
3400	1.74	2.05	2.36	2.67	2.97	3.26	3.55	3.84	4.11	4.39	4.65	4.91	5.17	5.42	5.66	5.89	6.12	6.34	6.56	6.77	6.97	7.16	**7.34**	**7.52**	**7.65**	**7.65**	**6.21**	**8.52**	**8.77**	**8.95**	**9.14**				.00	.05	.10	.16	.21	.26	.31	.36	.41	.47	3400
3500	1.77	2.09	2.41	2.72	3.02	3.32	3.62	3.91	4.19	4.46	4.74	5.00	5.26	5.51	5.75	5.98	6.21	6.43	6.65	6.85	7.05	**7.24**	**7.42**	**7.39**	**7.76**	**7.91**	**8.26**	**8.54**	**8.77**	**8.92**					.00	.05	.11	.16	.21	.27	.32	.37	.43	.48	3500
3600	1.79	2.12	2.45	2.76	3.08	3.38	3.68	3.97	4.26	4.54	4.81	5.08	5.34	5.59	5.83	6.07	6.30	6.52	6.73	6.93	**7.13**	**7.31**	**7.49**	**7.66**	**7.82**	**7.96**	**8.29**	**8.35**	**8.75**	**8.87**					.00	.05	.11	.16	.22	.27	.33	.38	.44	.49	3600
3700	1.82	2.16	2.49	2.81	3.13	3.44	3.74	4.04	4.33	4.61	4.89	5.15	5.42	5.67	5.91	6.15	6.38	6.59	6.80	**7.01**	**7.28**	**7.38**	**7.55**	**7.71**	**7.86**	**8.01**	**8.31**	**8.55**	**8.71**	**8.79**					.00	.06	.11	.17	.23	.28	.34	.39	.45	.51	3700
3800	1.85	2.19	2.52	2.85	3.18	3.49	3.80	4.10	4.39	4.68	4.96	5.23	5.49	5.74	5.99	6.22	6.45	6.66	**6.87**	**7.07**	**7.26**	**7.43**	**7.60**	**7.76**	**7.90**	**8.03**	**8.31**	**8.52**	**8.65**	**8.69**					.00	.06	.12	.17	.23	.29	.35	.41	.46	.52	3800
3900	1.87	2.22	2.56	2.90	3.22	3.54	3.85	4.16	4.46	4.74	5.02	5.30	5.56	5.81	6.05	6.29	6.51	6.73	**6.93**	**7.13**	**7.31**	**7.48**	**7.64**	**7.79**	**7.92**	**8.05**	**8.30**	**8.48**	**8.36**						.00	.06	.12	.18	.24	.30	.36	.42	.48	.53	3900
4000	1.90	2.25	2.60	2.94	3.27	3.59	3.91	4.22	4.52	4.81	5.09	5.36	5.62	5.88	6.12	6.35	6.57	**8.78**	**6.98**	**7.17**	**7.35**	**7.51**	**7.67**	**7.81**	**7.94**	**8.05**	**8.28**	**8.42**	**8.44**						.00	.06	.12	.18	.24	.30	.37	.43	.49	.55	4000
4100	1.92	2.28	2.63	2.98	3.31	3.64	3.96	4.27	4.57	4.86	5.15	5.42	5.68	5.93	6.18	6.41	**6.63**	**4.63**	**7.03**	**7.21**	**7.38**	**7.54**	**7.63**	**7.82**	**7.93**	**8.04**	**8.23**	**8.33**							.00	.06	.13	.19	.25	.31	.37	.44	.50	.56	4100
4200	1.94	2.31	2.66	3.01	3.35	3.69	4.01	4.32	4.63	4.92	5.20	5.48	5.74	5.99	6.23	**6.46**	**6.67**	**6.87**	**7.06**	**7.24**	**7.41**	**7.36**	**7.69**	**70.81**	**7.92**	**8.01**	**8.17**	**8.23**							.00	.06	.13	.19	.26	.32	.38	.45	.51	.58	4200
4300	1.96	2.33	2.69	3.05	3.39	3.73	4.05	4.37	4.68	4.97	5.25	5.53	5.79	6.04	6.27	**6.50**	**6.71**	**6.91**	**7.09**	**7.26**	**7.41**	**7.56**	**7.69**	**7.80**	**7.69**	**7.97**	**8.10**								.00	.07	.13	.20	.26	.33	.39	.46	.52	.59	4300
4400	1.98	2.36	2.72	3.08	3.43	3.77	4.10	4.42	4.72	5.02	5.30	5.57	5.83	6.08	**6.31**	**6.54**	**6.74**	**6.93**	**7.11**	**7.27**	**7.42**	**7.33**	**7.67**	**7.77**	**7.85**	**7.92**	**8.00**								.00	.07	.13	.20	.27	.34	.40	.47	.54	.60	4400
4500	2.00	2.38	2.75	3.12	3.47	3.81	4.14	4.46	4.77	5.06	5.35	5.62	5.88	**6.12**	**6.35**	**6.57**	**6.77**	**6.95**	**7.12**	**7.28**	**7.42**	**7.54**	**7.64**	**7.73**	**7.80**	**7.85**									.00	.07	.14	.21	.27	.34	.41	.48	.55	.62	4500
4600	2.02	2.40	2.78	3.15	3.50	3.85	4.18	4.50	4.81	5.10	5.39	5.66	5.91	**6.15**	**6.38**	**6.59**	**6.78**	**6.96**	**7.13**	**7.27**	**7.40**	**7.51**	**7.60**	**7.67**	**7.73**	**7.76**									.00	.07	.14	.21	.27	.35	.42	.49	.56	.63	4600
4700	2.03	2.42	2.80	3.18	3.53	3.88	4.22	4.54	4.85	5.14	5.42	5.69	5.94	**6.18**	**6.40**	**6.61**	**6.79**	**6.96**	**7.12**	**7.25**	**7.37**	**7.47**	**7.55**	**7.61**	**7.65**	**7.66**									.00	.07	.14	.21	.29	.36	.43	.50	.57	.64	4700
4800	2.05	2.44	2.83	3.20	3.56	3.91	4.25	4.57	4.88	5.18	5.45	5.72	**5.97**	**6.20**	**6.42**	**6.62**	**6.80**	**6.96**	**7.10**	**7.23**	**7.33**	**7.42**	**7.48**	**7.53**	**7.55**										.00	.07	.15	.22	.29	.37	.44	.51	.59	.66	4800
4800	2.06	2.46	2.85	3.23	3.59	3.94	4.28	4.60	4.91	5.20	5.48	**5.74**	**5.99**	**6.22**	**6.43**	**6.62**	**6.79**	**6.94**	**7.08**	**7.19**	**7.28**	**7.30**	**7.40**	**7.43**											.00	.07	.15	.22	.30	.37	.45	.52	.60	.67	4900
5000	2.07	2.48	2.87	3.25	3.62	3.97	4.31	4.63	4.94	5.23	5.51	**5.76**	**6.00**	**6.23**	**6.43**	**6.61**	**6.78**	**6.92**	**7.04**	**7.15**	**7.22**	**7.26**	**7.31**	**7.32**											.00	.08	.15	.23	.30	.38	.46	.53	.61	.69	5000

Bold indicates belt speed above 6500 feet per minute. Special sheaves may be necessary. Consult Carlisle

Vee-Rib GENERAL SERVICE HORSEPOWER RATINGS — M

RPM of Faster Shaft	RATED HORSEPOWER PER RIB FOR SMALL SHEAVE OUTSIDE DIAMETER (INCHES)																												Additional HP Per Rib For Speed Ratio										RPM of Faster Shaft
	7.0	7.5	8.0	8.5	9.0	9.5	10.0	10.5	11.0	11.5	12.0	12.5	13.0	13.5	14.0	14.5	15.0	15.5	16.0	18.0	20.0	22.0	24.0	26.0	30.0	36.0	44.0		1.00 to 1.01	1.02 to 1.04	1.05 to 1.08	1.09 to 1.12	1.13 to 1.18	1.19 to 1.24	1.25 to 1.34	1.35 to 1.51	1.52 to 1.99	2.00 and Over	
435	3.05	3.44	3.83	4.21	4.60	4.98	5.36	5.74	6.11	6.49	6.86	7.23	7.59	7.96	8.32	8.68	9.04	9.40	9.76	11.2	12.5	13.9	15.2	16.5	19.0	22.5	26.7		.00	.04	.08	.13	.17	.21	.25	.29	.34	.38	435
485	3.32	3.76	4.19	4.61	5.04	5.46	5.87	6.29	6.70	7.11	7.52	7.93	8.33	8.73	9.13	9.52	9.92	10.3	10.7	12.2	13.7	15.2	16.6	18.0	20.7	24.4	28.6		.00	.05	.09	.14	.19	.23	.28	.33	.37	.42	485
575	3.81	4.31	4.81	5.31	5.80	6.29	6.77	7.25	7.73	8.21	8.68	9.15	9.61	10.1	10.5	11.0	11.4	11.9	12.3	14.1	15.8	17.4	19.0	20.6	23.5	27.3	31.4		.00	.06	.11	.17	.22	.28	.33	.39	.44	.50	575
585	3.86	4.37	4.88	5.38	5.88	6.38	6.87	7.36	7.84	8.32	8.80	9.28	9.75	10.2	10.7	11.1	11.6	12.1	12.5	14.3	16.0	17.7	19.3	20.9	23.8	27.6	**31.7**		.00	.06	.11	.17	.23	.28	.34	.40	.45	.51	585
690	4.40	4.99	5.58	6.16	6.73	7.30	7.87	8.43	8.99	9.54	10.1	10.6	11.2	11.7	12.2	12.8	13.3	13.8	14.3	16.3	18.2	20.1	21.8	23.5	26.5	30.3	**33.5**		.00	.07	.13	.20	.27	.33	.40	.47	.53	.60	690
725	4.58	5.19	5.80	6.41	7.01	7.60	8.19	8.78	9.36	9.93	10.5	11.1	11.6	12.2	12.7	13.3	13.8	14.4	14.9	17.0	18.9	20.8	22.6	24.3	27.3	**30.9**	**33.8**		.00	.07	.14	.21	.28	.35	.42	.49	.56	.63	725
870	5.27	5.99	6.71	7.41	8.11	8.80	9.49	10.2	10.8	11.5	12.2	12.8	13.4	14.1	14.7	15.3	15.9	16.5	17.1	19.4	21.6	23.6	25.4	27.1	**29.9**	**32.6**			.00	.08	.17	.25	.34	.42	.50	.59	.67	.76	870
950	5.64	6.41	7.18	7.94	8.69	9.43	10.2	10.9	11.6	12.3	13.0	13.7	14.4	15.1	15.7	16.4	17.0	17.6	18.3	20.7	22.9	24.9	26.7	28.3	**30.8**	**32.6**			.00	.09	.18	.28	.37	.46	.55	.64	.73	.83	950
1160	6.54	7.45	8.35	9.24	10.1	11.0	11.8	12.7	13.5	14.3	15.1	15.9	16.6	17.4	18.1	18.8	19.5	20.2	20.9	23.4	25.6	27.4	**28.9**	**30.1**	**31.1**				.00	.11	.22	.34	.45	.56	.67	.78	.90	1.01	1160
1425	7.55	8.62	9.67	10.7	11.7	12.7	13.7	14.6	15.5	16.4	17.3	18.1	19.0	19.8	20.5	21.3	22.0	22.7	23.3	25.6	**27.4**	**28.6**	**29.2**	**29.0**					.00	.14	.28	.41	.55	.69	.83	.96	1.10	1.24	1425
1750	8.61	9.84	11.0	12.2	13.3	14.4	15.5	16.5	17.5	18.4	19.3	20.2	21.0	21.7	22.5	23.1	**23.7**	**24.3**	**24.8**	**26.3**	**26.9**								.00	.17	.34	.51	.68	.85	1.01	1.18	1.35	1.52	1750
2850	10.4	11.9	13.2	14.4	15.5	**16.4**	**17.2**	**17.9**	**18.4**	**18.7**	**18.9**	**18.9**	**18.7**																.00	.28	.55	.83	1.10	1.38	1.65	1.93	2.20	2.48	2850
3450	10.1	11.4	**12.5**	**13.3**	**14.0**	**14.4**	**14.6**	**14.5**	**14.2**																				.00	.33	.67	1.00	1.33	1.67	2.00	2.33	2.67	3.00	3450
100	.90	1.01	1.11	1.21	1.31	1.42	1.52	1.62	1.72	1.82	1.92	2.01	2.11	2.21	2.31	2.41	2.50	2.60	2.70	3.08	3.46	3.83	4.21	4.58	5.31	6.38	7.79		.00	.01	.02	.03	.04	.05	.06	.07	.08	.09	100
200	1.61	1.80	2.00	2.19	2.38	2.57	2.76	2.95	3.14	3.32	3.51	3.69	3.88	4.06	4.24	4.43	4.61	4.79	4.97	5.68	6.39	7.09	7.78	8.47	9.82	11.8	14.3		.00	.02	.04	.06	.08	.10	.12	.14	.15	.17	200
300	2.25	2.53	2.81	3.09	3.36	3.64	3.91	4.18	4.45	4.72	4.98	5.25	5.52	5.78	6.04	6.38	6.57	6.82	7.08	8.11	9.12	10.1	11.1	12.1	14.0	16.7	20.2		.00	.03	.06	.09	.12	.14	.17	.20	.23	.26	300
400	2.84	3.21	3.57	3.93	4.29	4.64	4.99	5.34	5.69	6.04	6.38	6.73	7.07	7.41	7.75	8.08	8.42	8.75	9.08	10.4	11.7	12.9	14.2	15.4	17.8	21.1	25.1		.00	.04	.08	.12	.15	.19	.23	.27	.31	.35	400
500	3.41	3.85	4.29	4.73	5.16	5.60	6.03	6.45	6.88	7.30	7.72	8.13	8.55	8.96	9.37	9.77	10.2	10.6	11.0	12.6	14.1	15.6	17.0	18.5	21.2	24.9	29.2		.00	.05	.10	.14	.19	.24	.29	.34	.39	.43	500
600	3.94	4.46	4.98	5.50	6.01	6.51	7.01	7.51	8.01	8.50	8.99	9.48	9.96	10.4	10.9	11.4	11.9	12.3	12.8	14.6	16.3	18.0	19.7	21.3	24.2	28.1	**32.0**		.00	.06	.12	.17	.23	.29	.35	.41	.46	.52	600
700	4.45	5.05	5.64	6.23	6.81	7.39	7.96	8.53	9.10	9.65	10.2	10.8	11.3	11.8	12.4	12.9	13.4	14.0	14.5	16.5	18.4	20.3	22.1	23.7	26.8	**30.5**	**33.6**		.00	.07	.14	.20	.27	.34	.41	.47	.54	.61	700
800	4.94	5.61	6.28	6.93	7.59	8.23	8.87	9.51	10.1	10.8	11.4	12.0	12.6	13.2	13.8	14.4	14.9	15.5	16.1	18.3	20.3	22.3	24.1	25.8	28.8	**32.0**	**33.7**		.00	.08	.15	.23	.31	.39	.46	.54	.62	.70	800
900	5.41	6.15	6.89	7.61	8.33	9.04	9.74	10.4	11.1	11.8	12.5	13.1	13.8	14.4	15.1	15.7	16.3	17.0	17.6	19.9	22.1	24.1	25.9	27.6	**30.3**	**32.7**			.00	.09	.17	.26	.35	.43	.52	.61	.70	.78	900
1000	5.86	6.67	7.47	8.26	9.04	9.81	10.6	11.3	12.1	12.8	13.5	14.2	14.9	15.6	16.3	17.0	17.7	18.3	18.9	21.4	23.6	25.6	27.4	**28.9**	**31.2**	**32.2**			.00	.10	.19	.29	.39	.48	.58	.68	.77	.87	1000
1100	6.29	7.16	8.03	8.88	9.72	10.6	11.4	12.2	13.0	13.8	14.5	15.3	16.0	16.7	17.5	18.2	18.9	19.5	20.2	22.7	24.9	26.8	**28.5**	**29.8**	**31.3**				.00	.11	.21	.32	.43	.53	.64	.74	.85	.96	1100
1200	6.70	7.64	8.56	9.47	10.4	11.3	12.1	13.0	13.8	14.6	15.4	16.2	17.0	17.8	18.5	19.2	20.0	20.6	21.3	23.8	26.0	**27.8**	**29.2**	**30.2**	**30.8**				.00	.12	.23	.35	.46	.58	.70	.81	.93	1.04	1200
1300	7.09	8.09	9.07	10.0	11.0	11.9	12.8	13.7	14.6	15.5	16.3	17.1	17.9	18.7	19.5	20.2	20.9	21.6	22.3	24.7	**26.8**	**28.4**	**29.5**	**30.0**					.00	.13	.25	.38	.50	.63	.75	.88	1.00	1.13	1300
1400	7.46	8.52	9.55	10.6	11.6	12.5	13.5	14.4	15.3	16.2	17.1	18.0	18.8	19.6	20.3	21.1	21.8	22.5	23.1	**25.5**	**27.3**	**28.6**	**29.3**	**29.3**					.00	.14	.27	.41	.54	.68	.81	.95	1.08	1.22	1400
1500	7.81	8.92	10.0	11.1	12.1	13.1	14.1	15.1	16.0	16.9	17.8	18.7	19.5	20.3	21.1	21.8	22.5	23.2	23.8	**26.0**	**27.6**	**28.5**	**28.6**						.00	.14	.29	.43	.58	.72	.87	1.01	1.16	1.30	1500
1600	8.15	9.31	10.4	11.5	12.6	13.7	14.7	15.7	16.7	17.6	18.5	19.3	20.2	21.0	21.7	22.4	23.1	23.8	**24.4**	**26.3**	**27.5**	**27.9**							.00	.15	.31	.46	.62	.77	.93	1.08	1.24	1.39	1600
1700	8.46	9.67	10.8	12.0	13.1	14.2	15.2	16.2	17.2	18.2	19.1	19.9	20.7	21.5	22.2	**22.9**	**23.6**	**24.2**	**24.7**	**26.4**	**27.2**	**27.0**							.00	.16	.33	.49	.66	.82	.99	1.15	1.31	1.48	1700
1800	8.75	10.0	11.2	12.4	13.5	14.6	15.7	16.7	17.7	18.7	19.6	20.4	21.2	21.9	**22.6**	**23.3**	**23.9**	**24.4**	**24.9**	**26.2**	**26.4**								.00	.17	.35	.52	.70	.87	1.04	1.22	1.39	1.57	1800
1900	9.02	10.3	11.6	12.8	13.9	15.1	16.1	17.2	18.2	19.1	20.0	20.8	21.6	**22.3**	**22.9**	**23.5**	**24.0**	**24.5**	**24.9**	**25.7**	**25.4**								.00	.18	.37	.55	.73	.92	1.10	1.28	1.47	1.65	1900
2000	9.27	10.6	11.9	13.1	14.3	15.4	16.5	17.5	18.5	19.4	20.3	21.1	**21.8**	**22.5**	**23.0**	**23.6**	**24.0**	**24.4**	**24.7**	**25.0**									.00	.19	.39	.58	.77	.97	1.16	1.35	1.55	1.74	2000
2100	9.50	10.9	12.2	13.4	14.6	15.8	16.8	17.9	18.8	19.7	**20.3**	**21.3**	**21.9**	**22.5**	**23.0**	**23.5**	**23.8**	**24.1**	**24.2**	**24.0**									.00	.20	.41	.61	.81	1.01	1.22	1.42	1.62	1.83	2100
2200	9.71	11.1	12.4	13.7	14.9	16.0	17.1	18.1	19.0	**19.9**	**20.6**	**21.3**	**21.9**	**22.4**	**22.9**	**23.2**	**23.4**	**23.6**	**23.6**										.00	.21	.43	.64	.85	1.06	1.28	1.49	1.70	1.91	2200
2300	9.89	11.3	12.6	13.9	15.1	16.2	17.3	18.3	**19.2**	**20.0**	**20.7**	**21.3**	**21.8**	**22.2**	**22.6**	**22.8**	**22.9**	**22.9**	**22.7**										.00	.22	.45	.67	.89	1.11	1.33	1.56	1.78	2.00	2300
2400	10.0	11.5	12.8	14.1	15.3	16.4	17.4	**18.4**	**19.2**	**20.0**	**20.6**	**21.1**	**21.6**	**21.9**	**22.1**	**22.2**	**22.1**	**21.9**											.00	.23	.46	.70	.93	1.16	1.39	1.62	1.86	2.09	2400
2500	10.2	11.6	13.0	14.2	15.4	16.5	17.5	**18.4**	**19.2**	**19.9**	**20.4**	**20.9**	**21.2**	**21.4**	**21.4**	**21.4**	**21.2**												.00	.24	.48	.72	.97	1.21	1.45	1.69	1.93	2.17	2500
2600	10.3	11.7	13.1	14.4	15.5	16.6	**17.5**	**18.4**	**19.1**	**19.7**	**20.1**	**20.5**	**20.7**	**20.7**	**20.6**	**20.4**													.00	.25	.50	.75	1.01	1.26	1.51	1.76	2.01	2.26	2600
2700	10.4	11.8	13.2	14.4	15.5	**16.6**	**17.5**	**18.2**	**18.9**	**19.4**	**19.7**	**19.9**	**20.0**	**19.9**	**19.6**														.00	.26	.52	.78	1.04	1.30	1.57	1.83	2.09	2.35	2700
2800	10.4	11.9	13.2	14.4	**15.5**	**16.5**	**17.3**	**18.0**	**18.6**	**19.0**	**19.2**	**19.3**	**19.2**	**18.9**															.00	.27	.54	.81	1.08	1.35	1.62	1.89	2.16	2.44	2800
2900	10.5	11.9	13.2	14.4	**15.5**	**16.4**	**17.1**	**17.7**	**18.2**	**18.5**	**18.6**	**18.5**	**18.2**																.00	.28	.56	.84	1.12	1.40	1.68	1.96	2.24	2.52	2900
3000	10.5	11.9	13.2	**14.3**	**15.3**	**16.2**	**16.8**	**17.4**	**17.7**	**17.8**	**17.8**	**17.5**																	.00	.29	.58	.87	1.16	1.45	1.74	2.03	2.32	2.61	3000
3100	10.4	11.8	13.1	**14.2**	**15.1**	**15.9**	**16.5**	**16.9**	**17.1**	**17.1**	**16.9**																		.00	.30	.60	.90	1.20	1.50	1.80	2.10	2.40	2.70	3100
3200	10.4	11.7	**13.0**	**14.0**	**14.9**	**15.6**	**16.1**	**16.3**	**16.4**	**16.2**																			.00	.31	.62	.93	1.24	1.55	1.85	2.16	2.47	2.78	3200
3300	10.3	11.6	**12.8**	**13.8**	**14.6**	**13.2**	**15.5**	**15.7**	**15.6**	**15.3**																			.00	.32	.64	.96	1.28	1.59	1.91	2.23	2.55	2.87	3300
3400	10.2	**11.5**	**12.6**	**13.5**	**14.2**	**14.7**	**14.9**	**14.9**	**14.7**																				.00	.33	.66	.99	1.31	1.64	1.97	2.30	2.63	2.96	3400
3500	10.0	**11.3**	**12.3**	**13.2**	**13.8**	**14.1**	**14.2**	**14.1**																					.00	.34	.68	1.01	1.35	1.69	2.03	2.37	2.71	3.04	3500
3600	9.83	**11.0**	**12.0**	**12.8**	**13.3**	**13.5**	**13.5**	**13.1**																					.00	.35	.70	1.04	1.39	1.74	2.09	2.43	2.78	3.13	3600
3700	**9.61**	**10.8**	**11.7**	**12.3**	**12.7**	**12.8**	**12.6**																						.00	.36	.72	1.07	1.43	1.79	2.14	2.50	2.86	3.22	3700
3800	**9.36**	**10.4**	**11.3**	**11.8**	**12.1**	**12.0**	**11.6**																						.00	.37	.74	1.10	1.47	1.84	2.20	2.57	2.94	3.30	3800

Bold indicates belt speed above 6500 feet per minute. Special sheaves may be necessary. Consult Carlisle

TENSIONING THE Vee-Rib DRIVE

METHOD 1: Percent of Elongation Method — For ‘L’ and ‘M’ Section Belts
NOTE: It is recommended that Tension — Deflection (Method 2) be used wherever possible.
DO NOT USE FOR ‘J’ SECTION BELTS

Step 1. Loosen moveable base bolts and move sheaves close together to facilitate installation of belt.
2. Remove slack from belt and rotate sheaves to equalize belt tensions.
3. Wrap a steel tape around the outside circumference of the belts and read length to nearest 1/8″ (Figure 5).
4. Multiply this reading by percent multiplier figure in Table 13, and add to reading for new length.
5. Slowly apply force to moveable base to elongate belts to new length and tighten base bolts.

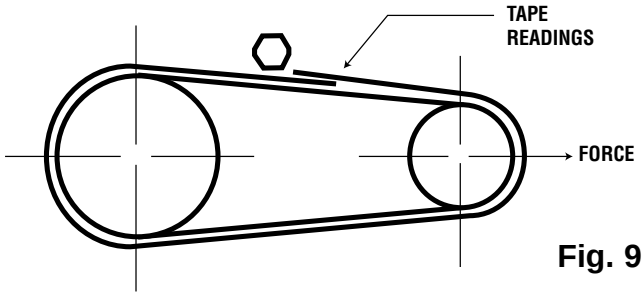

Fig. 9

Example: ‘M’ Section Belt
Initial reading = 132″
Multiply by 0.009 and add; 132 x 0.009 = 1.188 + 132 = 133.188
New elongated length = 133-3/16″

Table 13

Belt Section		Percent	Multiplier
J	All	SEE METHOD 2	
L	All	1.4%	0.014
M	All	0.9%	0.009

METHOD 2: Tension — Deflection Method

Step 1. See Method 1, Step 1.
2. See Method 1, Step 2.
3. Measure span length.
4. Using a spring scale at right angles to the center of the span, apply a force large enough to deflect the belt 1/64″ for each 1″ of span. The force should approximate the forces shown in tension table 14. Table 14 forces are in pounds per rib strand.
5. After 2-4 hours of operation, the drive should be retensioned to approximate maximum force.
6. After 24-48 hours of operation, check force on belt to be between minimum and maximum. Excessively high or low tensions will affect belt life.

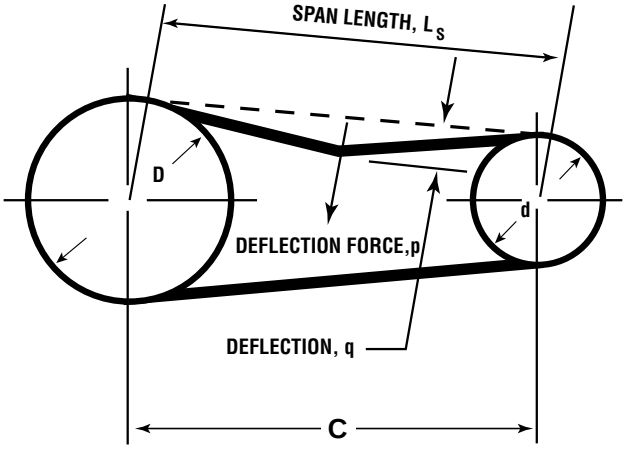

Fig. 10

Table 14. Belt Deflection Force (F)

Belt Section	Small Sheave Diam. Range	(F) Lbs. Per Rib Min.	(F) Lbs. Per Rib Max.
J	Up to 1.5″	0.38	0.56
J	1.6″ to 2.5″	0.56	0.84
J	2.6″ to 4.0″	0.69	1.04
L	Up to 4.0″	1.88	2.81
L	4.1″ to 5.5″	2.38	3.56
L	5.6″ to 8.0″	2.75	4.13
M	Up to 9.0″	6.75	10.13
M	9.1″ to 13.0″	8.25	12.38
M	13.1″ to 18.0″	9.00	13.50

FHP
LIGHT DUTY

DRIVE SELECTION PROCEDURE

XDV/DURAPOWER II
FHP LIGHT DUTY
DRIVE SELECTION PROCEDURE

See Page 221 for a complete listing of

XDV and Durapower II V-belts

XDV and Durapower II belts are typically used with fractional horsepower motors or small engines and are designed primarily for fractional horsepower service characteristics.
These belts are intended and specifically designed for use with small diameter sheaves on drives of such loads and service requirements which are within the capacity of a single belt.

The service for which such belts are intended is commonly infrequent or intermittent rather than continuous. Typical applications are Domestic Laundry Machines, Home Workshop Tools, Small Fans and Blowers, Small Pumps, Oil Burners, Stokers, Meat Slicers, Small Metal and Woodworking Machines, Garage Equipment, and Portable Farm Tools.

V-BELT SHEAVES

Groove Dimensions. Groove angles and dimensions for sheaves should conform to Table 11 and Figures 11 and 12. Sides of grooves shall be finished to .125 micro-inches or smoother, should be free of surface defects, and the edges of all grooves shall be rounded.

Keyways for sheaves. Keyways in the hubs of V-belt sheaves should conform to the dimensions and tolerances in table 12. Sheave hub keyways shall be constant depth unless a taper keyway is specified Where required, the taper in the hub keyway should be 0.125 inch per foot, the depth at the deep end equal to the depth t_2 Table 12.

V-BELTS

V-Belt Cross Sections. Nominal dimensions of the three cross sections are given in table 13. Due to different constructions and methods of manufacture, the cross sectional shape, dimensions and included angle between the sidewalls may differ with different manufacturers. However, all belts of a given cross section operate interchangeably in standard grooves designated by the same number.

V-belt Designation. V-belt sizes shall be identified by a standard belt number, consisting of a letter-numerical combination. For example, 2L belt 8.0″ in nominal length should be designated 2L080; a 3L belt 52.0″ in nominal length should be designated 3L520; a 4L belt 100.0″ in nominal length would be designated 4L1000.

Length Designation. Nominal dimensions of Light Duty or Fractional Horsepower belts are useful for identification purposes but cannot be used for accurate belt measurement.

The effective outside length of a V-belt shall be determined by placing the belt on a measuring fixture comprising two sheaves of equal diameter, a method of applying tension and a means of measuring the center distance between the two sheaves. One of the sheaves is fixed in position while the other is movable along a graduated scale. The sheave diameter to be used for each belt cross section and the tension to be applied are shown in Table 15.

In measuring the length of a V-belt, the belt shall be rotated at least two revolutions to seat the belt properly in the sheave grooves and to divide equally the total tension between the two strands of the belt. The midpoint of the center distance travel of the movable sheave shall define the belt center distance.

The effective outside length shall be calculated by adding the effective outside circumference of one of the measuring sheaves to twice the measured center distance between the two sheaves.

The cross section dimensions of the belt shall be checked by measuring the distance from the top of the belt to the top of the sheave groove. this measurement provides the “ride” of the belt with respect to the top of the groove which shall be within the limits given in Table 15.

Length Tolerances. Length shall be within the limit shown in the length tolerance column of Table 14.

FHP LIGHT DUTY DRIVE SELECTION PROCEDURE
STANDARD SHEAVE DIMENSIONS

Table 11 **Groove Dimensions (See Figures 1 and 2)**

Belt Section	Effective Outside Diameter: Minimum Recom-mended (Inches)	Effective Outside Diameter: Range (Inches)	α Groove Angle ±0.0°20' (Degrees)	d_B Ball Diameter ±0.0005 (Inches)	$2R_B$ (Inches)	b_g Reference (Inches)	h_g Minimum (Inches)	2a (Inches)
		Less Than 1.50	32		0.176			
2L	0.8	1.50 to 1.99	34	0.2188	0.182	0.240	0.250	0.04
		2.00 to 2.50	36		0.188			
		Over 2.50	38		0.194			
		Less Than 2.20	32		0.177			
3L	1.5	2.20 to 3.19	34	0.3125	0.191	0.364	0.406	0.06
		3.20 to 4.20	36		0.203			
		Over 4.20	38		0.215			
		Less Than 2.65	30		0.299			
4L	2.5	2.65 to 3.24	32	0.4375	0.316	0.490	0.490	0.10
		3.25 to 5.65	34		0.331			
		Over 5.65	38		0.358			
		Less Than 3.95	30		0.385			
5L	3.5	3.95 to 4.94	32	0.5625	0.406	0.630	0.580	0.16
		4.95 to 7.35	34		0.426			
		Over 7.35	38		0.461			

Note: *The diameter used in calculating speed ratio and belt speed will be obtained by subtracting the "2a" value in Table 11 from the Effective Outside Diameter of the sheave.*

OTHER SHEAVE TOLERANCES

Outside Diameters

For outside diameters under 6.0 inches . . . . . ±0.015 inches

For outside diameters under 6.0 to 12.0 inches. . . . . ±0.015 inches

For outside diameters under 6.0 to 12.0 inches. . . . . ±0.015 inches

Outside Diameters Eccentricity*

For outside diameters 10.0 inches and under . . . . . 0.010 inches

For each additional inch of outside diameter, add 0.0005 inch

Groove Side Wobble & Runout*

For outside diameters 20.0 inches and under . . . . . 0.0015 inch per inch of outside diameter.

For each additional inch of outside diameter, add 0.0005 inch

* Total Indicator Reading

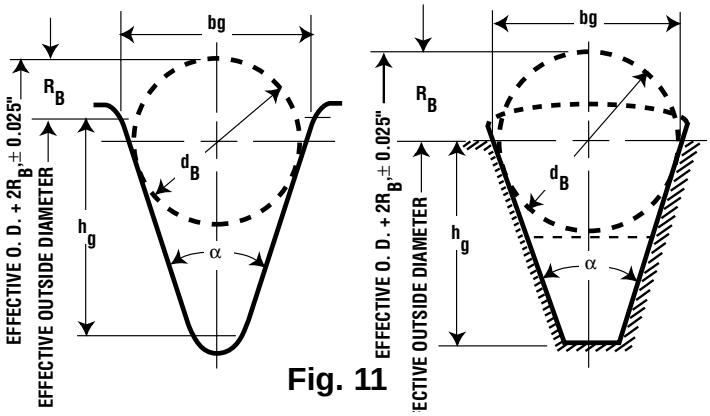

Fig. 11 Method for Checking Sheaves

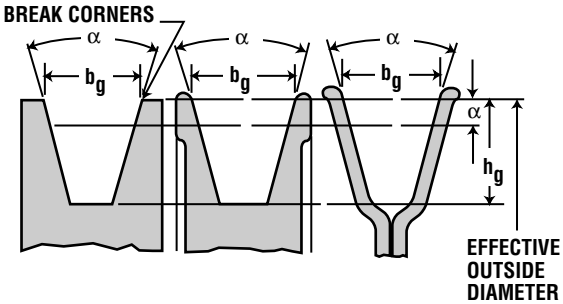

Figure 12. Sheave Dimensions

Table 12 **Keyway Dimensions — Inches**

Shaft Diameter	Width, b*	Depth t_2 +0.015 -0.000
Up Through 7/16 (0.44)	3/32 (0.094)	3/64 (0.047)
Over 7/16 (0.44) To and Incl 9/16 (0.56)	1/8 (0.125)	1/16 (0.062)
Over 9/16 (0.56) To and Incl 7/8 (0.88)	3/16 (0.188)	3/32 (0.094)
Over 7/8 (0.88) To and Incl 1-1/4 (1.25)	1/4 (0.250)	1/8 (0.125)
Over 1-1/4 (.125) To and Incl 1-3/8 (1.38)	5/16 (0.312)	5/32 (0.156)
Over 1-3/8 (1.38) To and Incl 1-3/4 (1.75)	3/8 (0.375)	3/16 (0.188)
Over 1-3/4 (1.75) To and Incl 2-1/4 (2.25)	1/2 (0.500)	1/4 (0.250)
Over 2-1/4 (2.25) To and Incl 2-3/4 (2.75)	5/8 (0.625)	5/16 (0.312)
Over 2-3/4 (2.75) To and Incl 3-1/4 (3.25)	3/4 (0.750)	3/8 (0.375)
Over 3-1/4 (3.25) To and Incl 3-3/4 (3.75)	7/8 (0.875)	7/16 (0.438)
Over 3-3/4 (3.75) To and Incl 4-1/2 (4/50)	1 (1.000)	1/2 (0.500)
Over 4-1/2 (4.50) To and Incl 5-1/2 (5.50)	1-1/4 (1.250)	5/8 (0625)

* Tolerances on widths, b (inches)
For widths up through 1/4 (0.250) . . . . . +0.003, -0.000
For widths over 1/4 (0.250) to and incl. 1/2 (0.500) . . . . . +0.0035, -0.000
For widths over 1/2 (0.500) to and incl. 1 (1.000) . . . . . +0.004, -0.000
For widths over 1 (1.000) . . . . . +0.005.-0.000

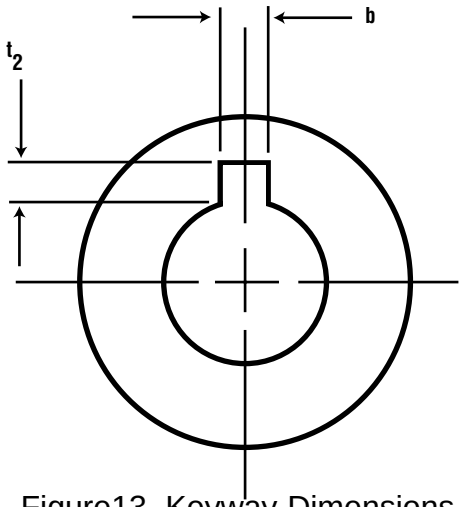

Figure13. Keyway Dimensions

Table 13 **Nominal Dimensions of V-belt Cross Section** **(See Figure 14)**

Belt Sections Durapower II	Belt Sections XDV	b_b (Inches)	h_b (Inches)
		0.25	0.16
3L	38	0.38	0.22
4L	48	0.50	0.31
5L	58	0.66	0.38

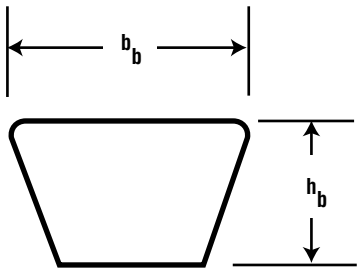

Figure 14. Nominal V-Belt Dimensions

FHP LIGHT DUTY DRIVE SELECTION PROCEDURE
STANDARD BELT DIMENSIONS

Table 14 — **Standard Effective Outside Belt Lengths**

Standard Effective Outside Length (Inches) Cross Section 3L	4L	5L	Permissible Deviation From Standard Effective Length (Inches)	Standard Effective Outside Length (Inches) Cross Section 3L	4L	5L	Permissible Deviation From Standard Effective Length (Inches)
			+0.12, -0.38	48	48	48	+0.25, -0.62
			+0.12, -0.38	49	49	49	+0.25, -0.62
			+0.12, -0.38	50	50	50	+0.25, -0.62
			+0.12, -0.38		51	51	+0.25, -0.62
			+0.12, -0.38	52	52	52	+0.25, -0.62
			+0.12, -0.38		53	53	+0.25, -0.62
14			+0.12, -0.38	54	54	54	+0.25, -0.62
15			+0.12, -0.38		55	55	+0.25, -0.62
16			+0.12, -0.38	56	56	56	+0.25, -0.62
17			+0.12, -0.38		57	57	+0.25, -0.62
18	18		+0.12, -0.38	58	58	58	+0.25, -0.62
19	19		+0.12, -0.38		59	59	+0.25, -0.62
20	20		+0.12, -0.38	60	60	60	+0.25, -0.62
21	21		+0.25, -0.62		61	61	+0.31, -0.69
22	22		+0.25, -0.62		62	62	+0.31, -0.69
23	23		+0.25, -0.62		63	63	+0.31, -0.69
24	24		+0.25, -0.62		64	64	+0.31, -0.69
25	25	25	+0.25, -0.62		65	65	+0.31, -0.69
26	26	26	+0.25, -0.62		66	66	+0.31, -0.69
27	27	27	+0.25, -0.62		67	67	+0.31, -0.69
28	28	28	+0.25, -0.62		68	68	+0.31, -0.69
29	29	29	+0.25, -0.62		69	69	+0.31, -0.69
30	30	30	+0.25, -0.62		70	70	+0.31, -0.69
31	31	31	+0.25, -0.62		71	71	+0.31, -0.69
32	32	32	+0.25, -0.62		72	72	+0.31, -0.69
33	33	33	+0.25, -0.62		73	73	+0.31, -0.69
34	34	34	+0.25, -0.62		74	74	+0.31, -0.69
35	35	35	+0.25, -0.62		75	75	+0.31, -0.69
36	36	36	+0.25, -0.62		76	76	+0.31, -0.69
37	37	37	+0.25, -0.62		77	77	+0.31, -0.69
38	38	38	+0.25, -0.62		78	78	+0.31, -0.69
39	39	39	+0.25, -0.62		79	79	+0.31, -0.69
40	40	40	+0.25, -0.62		80	80	+0.62, -0.88
41	41	41	+0.25, -0.62		82	82	+0.62, -0.88
42	42	42	+0.25, -0.62		84	84	+0.62, -0.88
43	43	43	+0.25, -0.62		86	86	+0.62, -0.88
44	44	44	+0.25, -0.62		88	88	+0.62, -0.88
45	45	45	+0.25, -0.62		90	90	+0.62, -0.88
46	46	46	+0.25, -0.62		92	92	+0.62, -0.88
47	47	47	+0.25, -0.62		94	94	+0.62, -0.88
					96	96	+0.62, -0.88
					98	98	+0.62, -0.88
					100	100	+0.62, -0.88

Table 15 **Details For Dimensional Checking of V-belts**

Belt Section	Outside Diameter (Inches) ±0.001	Outside Circum-ference (Inches)	Groove Angle (Degrees) +0˚10'	Groove Top Width (Inches) Reference	Ball or Rod Diameter (Inches) ±0.0005	Diameter Over Balls Or Rods (Inches) ±0.005	Groove Depth (Inches) Minimum	Total Tension (Pounds)	Position Of Belt With Respect To Top Of Groove (Inches)
3L	2.546	8.00	34	0.364	0.3125	2.737	0.406	25	+0.06
4L	3.183	10,000	32	0.490	0.4375	3.499	0.490	35	+0.09
5L	4.775	15.000	32	0.630	0.5625	5.181	0.580	50	+0.09

NOTE: Grooves of Master Inspection Sheaves shall be machined to tolerances shown in Table 15, treated to resist wear, and checked periodically for wear and damage.

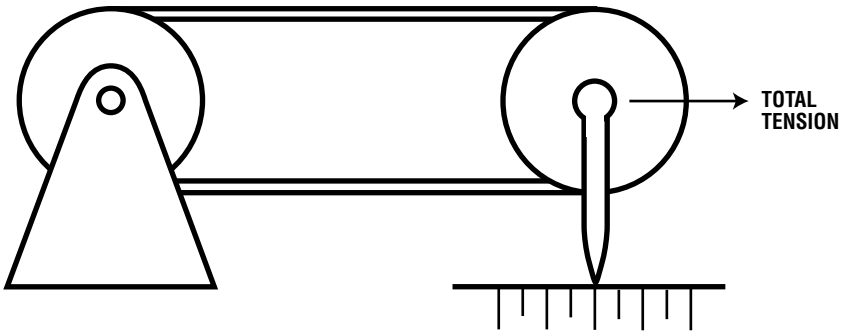

Figure 15. Diagram of Fixture for Dimensional Check of V-Belts

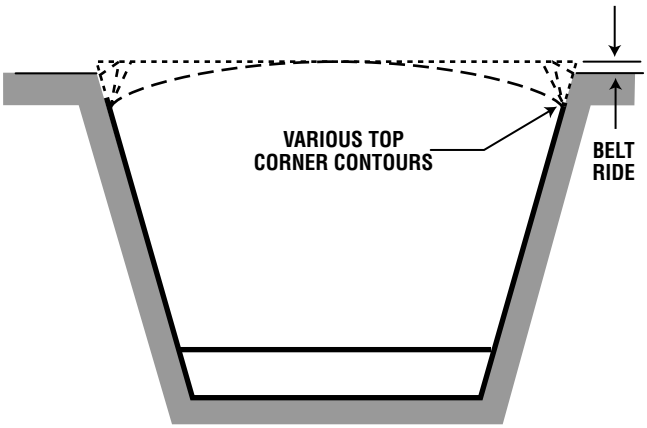

Figure 16. Measuring Belt Ride

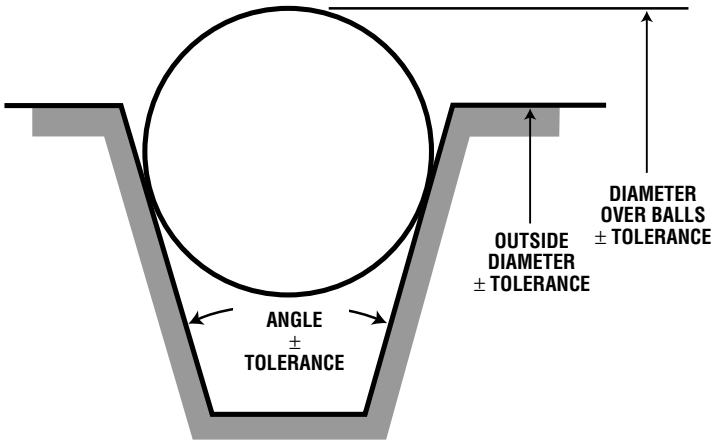

Figure 17. Method For Measuring Sheaves

DESIGN FACTORS

Horsepower Ratings. The horsepower ratings recommended are shown in Tables 16, 17 and 18. These ratings are calculated from the following formulas:

3L $$P_r = r\left(\frac{0.2164d^{0.91}}{r^{0.09}} - 0.2324 - 0.0001396r^2d^3\right)$$

4L $$P_r = r\left(\frac{0.4666d^{0.91}}{r^{0.09}} - 0.7231 - 0.0002286r^2d^3\right)$$

5L $$P_r = r\left(\frac{0.7748d^{0.91}}{r^{0.09}} - 1.727 - 0.0003641r^2d^3\right)$$

where: P_r = Horsepower rating per belt, uncorrected
r = rpm of faster shaft divided by 1000
d = d_e - 2a
de = effective diameter of small sheaves, in inches

Combined Correction Factor. The combined correction factor listed in Table 19 Accounts for corrections to the horsepower ratings for drive geometry as well as the service factor requirement of various types of machines.

Corrected Horsepower Ratings. The corrected horsepower rating is obtained by dividing the horsepower rating from Tables 6, 7 and 8 by the Combined Correction Factor shown in Table 19.

Drive Selection. Information on design and selection of single V-belt drives is available in engineering manuals published by belt and sheave manufacturers. Manufacturers should be consulted on such matters as preferred stock sizes, desirable speeds, center distances, etc.

Belt Length and Center Distance. The Effective Outside Length of a V-belt is given by the formula:

$$L_e = 2C + 1.57(D_e + d_e) + \frac{(D_e - d_e)^2}{4C}$$

where: L_e = effective outside length, in inches
C = center distance between shafts, in inches
D_e = effective outside diameter of large sheave, in inches
d_e = effective outside diameter of small sheave, in inches

The center distance between two shafts is given by this formula:

$$C = \frac{K_e + \sqrt{K_e^2 - 32(D_e - d_e)^2}}{16}$$

where: Ke = 4Le - 6.28(D_e - d_e)
C = center distance between shafts, in inches
Le = effective outside length, in inches
D_e = effective outside diameter of large sheave, in inches
d_e = effective outside diameter of small sheave, in inches

Installation and Take-Up Allowance. After calculating a center distance from a standard effective outside length, make provisions for adjusting the center distance as in Table 20 to allow for installation of the belt without injury and for maintenance of proper tension throughout the life of the belt.

FHP LIGHT DUTY DRIVE SELECTION PROCEDURE
HORSEPOWER RATINGS

Table 16
3L/38 Section V-Belts

RPM of Faster Shaft	Rated Horsepower For Small Sheave Effective Outside Diameter						
	1.50	1.75	2.00	2.25	2.50	2.75	3.00
1160	0.07	0.13	0.18	0.23	0.28	0.34	0.39
1750	0.09	0.17	0.25	0.32	0.39	0.46	0.54
3450	0.11	0.25	0.28	0.50	0.62	0.73	0.83
500	0.04	0.07	0.09	0.12	0.14	0.17	0.19
1000	0.07	0.12	0.16	0.21	0.25	0.30	0.34
1500	0.09	0.15	0.22	0.29	0.35	0.41	0.47
2000	0.10	0.19	0.27	0.35	0.43	0.51	0.59
2500	0.11	0.21	0.31	0.41	0.51	0.60	0.69
3000	0.11	0.23	0.35	0.46	0.57	0.68	0.78
3500	0.11	0.25	0.38	0.50	0.62	0.74	0.84
4000	0.11	0.26	0.40	0.54	0.66	0.78	0.88
4500	0.10	0.26	0.42	0.56	0.68	0.80	0.90

Table 17
4L/48 Section V-Belts

RPM of Faster Shaft	Rated Horsepower For Small Sheave Effective Outside Diameter								
	* 2.00	* 2.25	2.50	2.75	3.00	3.25	3.50	3.75	4.00
1160	0.12	0.23	0.34	0.45	0.56	0.67	0.77	0.88	0.98
1750	0.12	0.28	0.44	0.60	0.75	0.90	1.05	1.20	1.34
3450	0.02	0.30	0.57	0.83	1.07	1.30	1.52	1.73	1.92
500	0.08	0.14	0.19	0.24	0.29	0.34	0.39	0.44	0.49
1000	0.11	0.21	0.31	0.41	0.50	0.60	0.69	0.78	0.87
1500	0.12	0.26	0.40	0.54	0.67	0.81	0.94	1.07	1.20
2000	0.11	0.30	0.47	0.65	0.82	0.99	1.15	1.31	1.47
2500	0.09	0.31	0.53	0.73	0.94	1.13	1.32	1.51	1.69
3000	0.06	0.31	0.56	0.79	1.02	1.24	1.45	1.65	1.84
3500	0.02	0.30	0.57	0.83	1.07	1.31	1.53	1.73	1.92
4000		0.27	0.56	0.83	1.09	1.33	1.55	1.75	1.92
4500		0.22	0.54	0.81	1.07	1.30	1.51	1.69	1.84
5000		0.15	0.47	0.75	1.01	1.23	1.41	1.55	1.65

Table 18
5L/58 Section V-Belts

RPM of Faster Shaft	Rated Horsepower For Small Sheave Effective Outside Diameter								
	* 3.00	* 3.25	3.50	3.75	4.00	4.25	4.50	4.75	5.00
1160	0.28	0.46	0.63	0.81	0.98	1.15	1.32	1.49	1.66
1750	0.27	0.52	0.77	1.01	1.25	1.49	1.72	1.95	2.17
3450		0.28	0.65	1.00	1.33	1.63	1.91	2.16	2.39
500	0.20	0.29	0.37	0.45	0.54	0.62	0.70	0.78	0.86
1000	0.27	0.43	0.58	0.74	0.89	1.04	1.19	1.34	1.49
1500	0.28	0.50	0.72	0.94	1.15	1.36	1.57	1.77	1.98
2000	0.24	0.52	0.80	1.07	1.33	1.59	1.84	2.09	2.33
2500	0.16	0.49	0.82	1.13	1.43	1.72	2.00	2.27	2.53
3000	0.04	0.41	0.76	1.10	1.43	1.73	2.02	2.29	2.55
3500		0.26	0.63	0.99	1.31	1.62	1.89	2.14	2.36
4000		0.04	0.42	0.77	1.08	1.35	1.59	1.79	1.94
4500			0.12	0.44	0.71	0.93	1.10	1.21	1.26
5000					0.19	0.33	0.39	0.38	0.28

*Note: These diameters are below the minimum recommended diameter.

FHP LIGHT DUTY DRIVE SELECTION PROCEDURE

HORSEPOWER RATINGS

Table 19
Combined Correction Factor

	Speed Ratio	
Type of DriveN Unit	**Less Than 1.5**	**1.5 and Over**
Fans and Blowers	1.0	0.9
Domestic Laundry Machines	1.1	1.0
Centrifugal Pumps	1.1	1.0
Generators	1.2	1.1
Rotary Compressors	1.2	1.1
Machine Tools	1.3	1.2
Reciprocating Pump	1.4	1.3
Reciprocating Compressors	1.4	1.3
Wood Working Machines	1.4	1.3

Table 20
Center Distance Allowance for Belt Installation and Take-Up

Standard Effective Outside Length* (Inches)	Minimum Allowance Below Center Distance For Installation of Belt (Inches)			Minimum Allowance Above Center Distance For Maintaining Tension (Inches)	Total Center Distance Adjustment for Installation and Take-Up (Inches)		
	Belt Section			All Belt Sections	Belt Section		
	3L/38	4L/48	5L/58		3L/38	4L/48	5L/58
8 to 25	0.62	0.75		0.50	1.12	1.25	
25 to 36	0.62	0.75	1.00	0.50	1.12	1.25	1.50
36 to 61	0.75	0.88	1.00	0.75	1.50	1.62	1.75
61 to 80		1.00	1.12	1.12		2.12	2.24
80 thru 100		1.12	1.25	1.50		2.62	2.75

* “To” means the range is to, but not including, the second length.

V-BELT MATCHING LIMITS

Carlisle Chek-Mate™ System

BX 62 CARLISLE GOLD RIBBON™ COG BELT chek mate™ OIL HEAT RESISTANT STATIC DISSIPATING MADE IN U.S.A.
BX 62 CARLISLE GOLD RIBBON™ COG BELT chek mate™ OIL HEAT RESISTANT STATIC DISSIPATING MADE IN U.S.A.

With the advent of Chek-Mate™, a manufacturing process that holds V-Belt lengths within RMA tolerances for a matched set, matching numbers are no longer required on Carlisle's Super Blue Ribbon, Super Power-Wedge, Power-Wedge Cog-Belt and Gold Ribbon Cog-Belt which carry the distinctive Chek-Mate™ logo.

It should be noted that the majority of complaints regarding belt matching are found to be due to other causes, such as misalignment and sheave wear. These factors should always be checked if belts seem to be mismatched.

When replacing sets of V-Belts, here are some very important reminders:

- Never mix new and used belts on a drive
- Mis-matched belts or mixed brands from different manufacturers **can not** be matched together, and will **not** deliver the service life they should. Although all belt manufacturers use similar belt numbering systems, different brands with the same number will differ slightly in dimensions and are not capable of being mixed in a set. Also, construction differences cause them to ride differently in the grooves, and to stretch differently.
- Always replace with the right type of V-Belt.
- Always observe V-Belt matching limits.

Carlisle belts branded with the Chek-Mate™ logo do not require the use of matching codes, but all belts in the set must bear this symbol.

chek mate™

BANDED V-BELT MATCHING LIMITS

Matching limits for Carlisle bands are shown in the table below. Matching numbers are found on Carlisle bands next to the printed label (49,50,51 etc.) If the number 1 is shown below, the bands must all be printed with the same match number; i.e., all must be 50 or 51, etc. If the number 2 is shown below, a matched set may consist of any two adjacent matching numbers; i.e., 49 and 50, 50 and 51, etc.

Product Type and Length Code	Match Limit	Product Type and Length Code	Match Limit	Product Type and Length Code	Match Limit
Gold Label Cog-Band		**Wedge-Band**		**Super Vee-Band**	
RBX 55	1	R3VX250 - R3VX630	1	RBP35 - RBP60	1
RBX62 - RBX144	2	R3VX670 - R3VX1400	2	RBP61 - RBP144	2
RBX158 and longer	3	R5VX500 - R5VX630	1	RBP148 and up	3
RCX68 - RCX144	2	R5VX670 - R5VX1500	2	RCP51 - RCP60	1
RCX158 and longer	3	R5VX1600 and up	3	RCP68 - RCP144	2
RDX120 - RDX144	2	R8V1000 - R8V1500	2	RCP158 and up	3
RDX148 and longer	3	R8V1600 and up	3	RDP120 - RDP 144	2
				RDP158 and up	3

V-BELT

NOMINAL DIMENSIONS AND STOCK LENGTHS

V-BELT NOMINAL DIMENSIONS AND STOCK LENGTHS
POWER-WEDGE/SUPER POWER-WEDGE BELTS

Recommended Sheaves: Carlisle Power Wedge QD

Part Number	Outside Length (inches)	Maximum no. of Ribs R3VX (Cogged)	Maximum No. of Ribs R3V (Non-Cogged)
3VX250	25.00	12	12
3VX265	26.50	12	40
3VX280	28.00	12	40
3VX300	30.00	12	40
3VX315	31.50	12	40
3VX335	33.50	12	40
3VX355	35.50	12	40
3VX375	37.50	12	40
3VX400	40.00	12	40
3VX425	42.50	12	40
3VX450	45.00	12	40
3VX475	47.50	12	40
3VX500	50.00	12	40
3VX530	53.00	12	40
3VX560	56.00	12	40
3VX600	60.00	12	40
3VX630	63.00	12	40
3VX670	67.00	12	40
3VX710	71.00	12	40
3VX800	80.00	12	40
3VX850	85.00	12	40
3VX900	90.00	12	40
3VX950	95.00	12	40
3VX1000	100.00	12	40
3VX1060	106.00	12	40
3VX1120	112.00	12	40
3VX1180	118.00	12	40
3VX1250	125.00	12	40
3VX1320	132.00	12	40
3VX1400	140.00	12	40
5VX500	50.00	7	24
5VX530	53.00	7	24
5VX560	56.00	7	24
5VX600	60.00	7	24
5VX630	63.00	7	24
5VX670	67.00	7	24
5VX710	71.00	7	24
5VX750	75.00	7	24
5VX800	80.00	7	24
5VX850	85.00	7	24
5VX900	90.00	7	24
5VX950	95.00	7	24
5VX1000	100.00	7	24
5VX1060	106.00	7	24
5VX1120	112.00	7	24
5VX1180	118.00	7	24
5VX1250	125.00	7	24
5VX1320	132.00	7	24

available in chek-mate® construction

Part Number	Outside Length (inches)	Maximum no. of Ribs R5VX/R8VX (Cogged)	Maximum No. of Ribs R5V/R8V (Non-Cogged)
5VX1400	140.00	7	24
5VX1500	150.00	7	24
5VX1600	160.00	7	24
5VX1700	170.00	7	24
5VX1800	180.00	7	24
5VX1900	190.00	7	24
5VX2000	200.00	7	24
5V2120	212.00	—	24
5V2240	224.00	—	24
5V2360	236.00	—	24
5V2500	250.00	—	24
5V2650	265.00	—	24
5V2800	280.00	—	24
5V3000	300.00	—	24
5V3150	315.00	—	24
5V3350	335.00	—	24
5V3550	255	—	24
8VX1000	100.00	—	12
8XV1060	106.00	—	12
8VX1120	112.00	—	12
8VX1180	118.00	—	12
8VX1250	125.00	—	12
8VX1320	132.00	—	12
8VX1400	140.00	—	12
8VX1500	150.00	—	12
8VX1600	160.00	—	12
8VX1700	170.00	—	12
8VX1800	180.00	—	12
8VX1900	190.00	—	12
8VX2000	200.00	—	12
8V2120	212.00	—	12
8V2240	224.00	—	12
8V2360	236.00	—	12
8V2500	250.00	—	12
8V2650	265.00	—	12
8V2800	280.00	—	12
8V3000	300.00	—	12
8V3150	315.00	—	12
8V3350	335.00	—	12
8V3550	355.00	—	12
8V3750	375.00	—	12
8V4000	400.00	—	12
8V4250	425.00	—	12
8V4500	450.00	—	12
8V4750	475.00	—	12
8V5000	500.00	—	12
8V5600	560.00	—	12
8V6000	600.00	—	12
8V6600	660.00	—	12

V-BELT NOMINAL DIMENSIONS AND STOCK LENGTHS
CLASSICAL HEAVY DUTY INDUSTRIAL V-BELTS

Recommended Sheaves: Carlisle Classical QD Type — AQ

Aramax Blue Ribbon	Gold Ribbon Cog *	Super Blue Ribbon *	Super II *	Outside Length (inches)	Datum Length (inches)
—	AX21	AP21	—	23.3	22.3
—	AX22	AP22	—	24.3	23.3
—	AX23	AP23	—	25.3	24.3
—	AX24	AP24	—	26.3	25.3
AK26	AX26	AP26	A26	28.3	27.3
—	AX27	AP27	A27	29.3	28.3
—	AX28	AP28	A28	30.3	29.3
—	AX29	AP29	A29	31.3	30.3
—	AX30	AP30	A30	32.3	31.3
AK31	AX31	AP31	A31	33.3	32.3
—	AX32	AP32	A32	34.4	33.4
AK33	AX33	AP33	A33	35.3	34.3
—	AX34	AP34	A34	36.3	35.3
AK35	AX35	AP35	A35	37.3	36.3
—	AX36	AP36	A36	38.3	37.3
—	AX37	AP37	A37	39.3	38.3
AK38	AX38	AP38	A38	40.3	39.3
—	AX39	AP39	A39	41.3	40.3
AK40	AX40	AP40	A40	42.3	41.3
—	AX41	AP41	A41	43.3	42.3
AK42	AX42	AP42	A42	44.3	43.3
—	AX43	AP43	A43	45.3	44.3
AK44	AX44	AP44	A44	46.3	45.3
—	AX45	AP45	A45	47.3	46.3
AK46	AX46	AP46	A46	48.3	47.3
AK47	AX47	AP47	A47	49.3	48.3
AK48	AX48	AP48	A48	50.3	49.3
—	AX49	AP49	A49	51.3	50.3
AK50	AX50	AP50	A50	52.3	51.3
AK51	AX51	AP51	A51	53.3	52.3
AK52	AX52	AP52	A52	54.3	53.3
AK53	AX53	AP53	A53	55.3	54.3
AK54	AX54	AP54	A54	56.3	55.3
AK55	AX55	AP55	A55	57.3	56.3
AK56	AX56	AP56	A56	58.3	57.3
AK57	AX57	AP57	A57	59.3	58.3
AK58	AX58	AP58	A58	60.3	59.3
AK59	AX59	AP59	A59	61.3	60.3
AK60	AX60	AP60	A60	62.3	61.3
AK61	AX61	AP61	A61	63.3	62.3
AK62	AX62	AP62	A62	64.3	63.3
AK63	AX63	AP63	A63	65.3	64.3
AK64	AX64	AP64	A64	66.3	65.3
—	AX65	AP65	A65	67.3	66.3

Aramax Blue Ribbon	Gold Ribbon Cog *	Super Blue Ribbon *	Super II *	Outside Length (inches)	Datum Length (inches)
AK66	AX66	AP66	A66	68.3	67.3
—	AX67	AP67	A67	69.3	68.3
AK68	AX68	AP68	A68	70.3	69.3
—	AX69	AP69	A69	71.3	70.3
AK70	AX70	AP70	A70	72.3	71.3
AK71	AX71	AP71	A71	73.3	72.3
—	AX72	AP72	A72	74.3	73.3
—	AX73	AP73	A73	75.3	74.3
—	AX74	AP74	A74	76.3	75.3
AK75	AX75	AP75	A75	77.3	76.3
—	AX76	AP76	A76	78.4	77.4
—	AX77	AP77	A77	79.3	78.3
AK78	AX78	AP78	A78	80.3	79.3
—	AX79	AP79	A79	80.3	79.3
AK80	AX80	AP80	A80	82.3	81.3
—	AX81	AP81	A81	83.3	82.3
—	AX82	AP82	A82	84.3	83.3
—	AX83	AP83	A83	85.3	84.3
—	AX84	AP84	—	86.3	85.3
AK85	AX85	AP85	A85	87.3	86.3
—	AX86	AP86	A86	88.3	87.3
—	AX87	AP87	—	89.3	88.3
—	AX88	AP88	A88	90.3	89.3
—	AX89	AP89	—	91.3	90.3
AK90	AX90	AP90	A90	92.3	91.3
—	AX91	AP91	—	93.3	92.3
—	AX92	AP92	A92	94.3	93.3
—	AX93	AP93	—	95.3	94.3
—	AX94	AP94	A94	96.3	95.3
—	AX95	AP95	—	97.3	96.3
AK96	AX96	AP96	A96	98.3	97.3
—	AX97	AP97	—	99.3	98.3
—	AX98	AP98	A98	100.3	99.3
AK99	AX99	AP99	A99	57.3	100.3
—	AX100	AP100	A100	102.3	101.3
AK103	AX103	AP103	A103	105.3	104.3
AK105	AX105	AP105	A105	107.3	106.3
—	AX110	AP110	—	112.3	111.3
—	AX112	AP112	A112	114.3	113.3
—	AX120	AP120	A120	122.3	121.3
—	AX128	AP128	A128	130.3	129.3
—	—	—	—	—	
—	AX136	AP136	A136	138.3	137.3
—	AX144	AP144	A144	146.3	145.3
—	AX158	AP158	—	160.3	159.3
—	AX173	AP173	—	175.3	174.3
—	AX180	AP180	—	182.3	181.3

available in chekmate construction

V-BELT NOMINAL DIMENSIONS AND STOCK LENGTHS
CLASSICAL HEAVY DUTY INDUSTRIAL V-BELTS

Recommended Sheaves: Carlisle Classical QD Type — BQ

Aramax Blue Ribbon	Gold Ribbon Cog Belt *	Super Blue Ribbon *	Super II *	Outside Length (inch)	Datum Length (inch)	Max # of Ribs RBX (w/ cogs)	Max # of Ribs RBP (w/o cogs)
—	BX28	BP28	B28	30.8	29.8	—	—
—	BX32	BP32	B32	34.8	33.8	—	—
—	BX34	BP34	B34	36.8	35.8	—	—
BK35	BX35	BP35	B35	37.8	36.8	—	18
—	BX36	BP36	B36	38.8	37.8	—	—
BK38	BX38	BP38	B38	40.8	39.8	—	18
BK40	BX40	BP40	B40	42.8	41.8	—	18
—	BX41	BP41	B41	43.8	42.8	—	18
BK42	BX42	BP42	B42	44.8	43.8	—	18
—	BX43	BP43	B43	45.8	44.8	—	18
BK44	BX44	BP44	B44	46.8	45.8	—	18
—	BX45	BP45	B45	47.8	46.8	—	—
BK46	BX46	BP46	B46	48.8	47.8	—	18
—	BX47	BP47	B47	49.8	48.8	—	—
BK48	BX48	BP48	B48	50.8	49.8	—	18
—	BX49	BP49	B49	51.8	50.8	—	18
BK50	BX50	BP50	B50	52.8	51.8	—	18
BK51	BX51	BP51	B51	53.8	52.8	—	18
BK52	BX52	BP52	B52	54.8	53.8	—	18
BK53	BX53	BP53	B53	55.8	54.8	—	18
BK54	BX54	BP54	B54	56.8	55.8	—	18
BK55	BX55	BP55	B55	57.8	56.8	7	18
BK56	BX56	BP56	B56	58.8	57.8	—	
BK57	BX57	BP57	B57	59.8	58.8	—	
BK58	BX58	BP58	B58	60.8	59.8	—	18
BK59	BX59	BP59	B59	61.8	60.8	—	18
BK60	BX60	BP60	B60	62.8	61.8	—	18
BK61	BX61	BP61	B61	63.8	62.8	—	18
BK62	BX62	BP62	B62	64.8	63.8	7	18
BK63	BX63	BP63	B63	65.8	64.8	—	18
BK64	BX64	BP64	B64	66.8	65.8	7	18
BK65	BX65	BP65	B65	67.8	66.8	—	18
BK66	BX66	BP66	B66	68.8	67.8	7	18
—	BX67	BP67	B67	69.8	68.8	—	18
BK68	BX68	BP68	B68	70.8	69.8	7	18
—	BX69	BP69	B69	71.8	70.8	—	—
BK70	BX70	BP70	B70	72.8	71.8	—	18
BK71	BX71	BP71	B71	73.8	72.8	7	18
—	BX72	BP72	B72	74.8	73.8	—	18
—	BX73	BP73	B73	75.8	74.8	—	18
—	BX74	BP74	B74	76.8	75.8	—	18
BK75	BX75	BP75	B75	77.8	76.8	7	18
—	BX76	BP76	B76	78.8	77.8	—	—
—	BX77	BP77	B77	79.8	78.8	—	18
BK78	BX78	BP78	B78	80.8	79.8	7	18
—	BX79	BP79	B79	81.8	80.8	—	18
BK80	BX80	BP80	B80	82.8	81.8	—	18
BK81	BX81	BP81	B81	83.8	82.8	7	18
—	BX82	BP82	B82	84.8	83.8	—	18
BK83	BX83	BP83	B83	85.8	84.8	7	18
—	BX84	BP84	B84	86.8	85.8	—	—
BK85	BX85	BP85	B85	87.8	86.8	7	18
—	BX86	BP86	B86	88.8	87.8	—	—

Aramax Blue Ribbon	Gold Ribbon Cog Belt *	Super Blue Ribbon *	Super II *	Outside Length (inch)	Datum Length (inch)	Max # of Ribs RBX (w/ cogs)	Max # of Ribs RBP (w/o cogs)
—	BX87	BP87	B87	89.8	88.8	—	18
—	BX88	BP88	B88	90.8	89.8	—	18
—	BX89	BP89	—	91.8	90.8	—	—
BK90	BX90	BP90	B90	92.8	91.8	7	18
—	BX91	BP91	—	93.8	92.8	—	—
—	BX92	BP92	B92	94.8	93.8	—	—
BK93	BX93	BP93	B93	95.8	94.8	—	18
—	BX94	BP94	B94	96.8	95.8	—	—
BK95	BX95	BP95	B95	97.8	96.8	—	18
—	BX96	BP96	B96	98.8	97.8	—	18
BK97	BX97	BP97	B97	99.8	98.8	7	18
—	BX98	BP98	B98	100.8	99.8	—	—
—	BX99	BP99	—	101.8	100.8	—	18
BK100	BX100	BP100	B100	102.8	101.8	—	18
BK103	BX103	BP103	B103	104.8	103.8	—	18
BK105	BX105	BP105	B105	107.8	106.8	7	18
—	BX106	BP106	B106	108.8	107.8	—	—
BK108	BX108	BP108	B108	110.8	109.8	—	18
BK112	BX112	BP112	B112	114.8	113.8	7	18
—	BX113	BP113	B113	115.8	114.8	—	—
BK115	BX115	BP115	B115	117.8	116.8	—	—
BK116	BX116	BP116	B116	118.8	117.8	—	—
BK120	BX120	BP120	B120	122.8	121.8	7	18
—	BX123	BP123	—	125.8	124.8	—	—
BK124	BX124	BP124	B124	126.8	125.8	—	18
—	BX126	BP126	—	128.8	127.8	—	—
BK128	BX128	BP128	B128	130.8	129.8	7	18
—	BX133	BP133	—	135.8	134.8	—	18
BK136	BX136	BP136	B136	138.8	137.8	7	18
—	BX140	BP140	—	142.8	141.8	—	—
BK144	BX144	BP144	B144	146.8	145.8	7	18
—	BX148	BP148	—	150.8	149.8	—	18
—	BX150	BP150	B150	152.8	151.8	—	—
—	BX154	BP154	B154	156.8	155.8	—	—
BK158	BX158	BP158	B158	160.8	159.8	7	18
—	BX162	BP162	B162	164.8	163.8	—	18
BK173	BX173	BP173	B173	175.8	174.8	7	18
—	BX180	BP180	B180	182.8	181.8	7	18
—	BX191	BP191	—	193.8	192.8	—	—
BK195	BX195	BP195	B195	197.8	196.8	7	18
—	BX210	BP210	—	212.8	211.8	7	18
—	BX225	BP225	—	227.8	225.8	—	18
—	BX240	BP240	—	242.8	240.8	7	18
—	BX255	BP255	—	257.8	255.8	—	18
—	BX270	BP270	—	272.8	270.8	7	18
—	—	BP285	—	287.8	286.8	—	18
—	BX300	BP300	—	302.8	300.8	—	18
—	—	BP315	—	317.8	315.8	—	18
—	—	BP360	—	362.8	360.8	—	—

available in chekmate® construction

V-BELT NOMINAL DIMENSIONS AND STOCK LENGTHS
CLASSICAL HEAVY DUTY INDUSTRIAL V-BELTS

Recommended Sheaves: Carlisle Classical Type — CQ

Aramax Blue Ribbon	Gold Ribbon Cog Belt *	Super Blue Ribbon *	Super II *	Outside Length (inch)	Datum Length (inch)	Max # of Ribs RCX (w/ cogs)	Max # of Ribs RCP (w/o cogs)
—	CX51	CP51	—	55.2	53.9	—	12
—	CX55	CP55	—	59.2	57.9	—	12
—	CX60	CP60	C60	64.2	62.9	—	12
CK68	CX68	CP68	C68	72.2	70.9	5	12
CK71	CX71	CP71	C71	75.2	73.9	—	12
—	CX72	CP72	—	76.2	74.9	—	—
CK75	CX75	CP75	C75	79.2	77.9	5	12
—	CX78	CP78	—	82.2	80.9	—	—
CK81	CX81	CP81	C81	85.2	83.9	5	12
CK85	CX85	CP85	C85	89.2	85.9	5	12
CK90	CX90	CP90	C90	94.2	92.9	5	12
CK96	CX96	CP96	C96	100.2	98.9	5	12
—	CX97	CP97	C97	101.2	99.9	—	12
—	CX99	CP99	C99	103.2	102.2	—	12
CK100	CX100	CP100	C100	104.2	102.9	—	12
—	CX101	CP101	—	105.2	103.9	—	—
CK105	CX105	CP105	C105	109.2	107.9	5	12
—	CX108	CP108	C108	112.2	110.9	—	12
—	CX109	CP109	C109	113.2	111.9	—	12
—	CX111	CP111	—	115.2	113.9	—	—
CK112	CX112	CP112	C112	116.2	114.9	5	12
—	CX115	CP115	C115	119.2	117.9	—	—
CK120	CX120	CP120	C120	124.2	122.9	5	12
—	—	CP124	—	128.2	126.9	—	12
CK128	CX128	CP128	C128	132.2		5	12
CK136	CX136	CP136	C136	140.2	138.9	5	12
CK144	CX144	CP144	C144	148.2	146.9	5	12
—	CX148	CP148	—	152.2	150.9	—	—
—	CX150	CP150	C150	154.2	152.9	—	—
CK158	CX158	CP158	C158	162.2	160.9	5	12
CK162	CX162	CP162	C162	166.2	164.9	5	12
CK173	CX173	CP173	C173	177.2	175.9	5	12
CK180	CX180	CP180	C180	184.2	182.9	5	12
CK195	CX195	CP195	C195	199.2	197.9	5	12
—	CX210	CP210	—	214.2	212.9	5	12
—	CX225	CP225	—	229.2	225.9	5	12
—	CX240	CP240	—	244.2	240.9	5	12
—	CX255	CP255	—	259.2	255.9	5	12
—	CX270	CP270	—	274.2	270.9	5	12
—	—	CP285	—	289.2	285.9	—	12
—	CX300	CP300	—	304.2	300.9	5	12
—	—	CP315	—	319.2	315.9	—	12
—	CX330	CP330	—	334.2	330.9	5	12
—	—	CP345	—	349.2	345.9	—	12
—	CX360	CP360	—	364.2	360.9	5	12
—	—	CP390	—	394.2	390.9	—	12
—	—	CP420	—	424.2	420.9	—	12

Recommended Sheaves: Carlisle Classical Type — DQ

Gold Ribbon Cog Belt *	Super Blue Ribbon *	Outside Length (inch)	Datum Length (inch)	Max # of Ribs DX (w/ cogs)	Max # of Ribs DP (w/o cogs)
DX120	DP120	125.2	123.3	5	10
DX128	DP128	133.2	131.3	5	10
DX144	DP144	149.2	147.3	5	10
DX158	DP158	163.2	161.3	5	10
DX162	DP162	167.2	165.3	—	10
DX173	DP173	178.2	176.3	5	10
DX180	DP180	185.2	183.3	5	10
DX195	DP195	200.2	198.3	5	10
DX210	DP210	215.2	213.3	5	10
DX225	DP225	230.2	225.8	5	10
DX240	DP240	245.2	240.8	5	10
DX255	DP255	260.2	255.8	5	10
DX270	DP270	275.2	270.8	5	10
—	DP285	290.2	285.8	—	10
DX300	DP300	305.2	300.8	5	10
—	DP315	320.2	315.8	—	10
DX330	DP360	335.2	330.8	5	10
—	DP345	350.2	345.8	—	10
DX360	DP360	365.2	360.8	5	10
—	DP390	395.2	390.8	—	10
—	DP420	425.2	420.8	—	10
—	DP450	455.2	40.8	—	10
—	DP480	485.2	480.8	—	10
—	DP540	545.2	540.8	—	10
—	DP600	605.2	600.8	—	10
—	DP660	665.2	660.8	—	10

available in chek mate construction

V-BELT NOMINAL DIMENSIONS AND STOCK LENGTHS
VEE-RIB "J" CROSS-SECTION

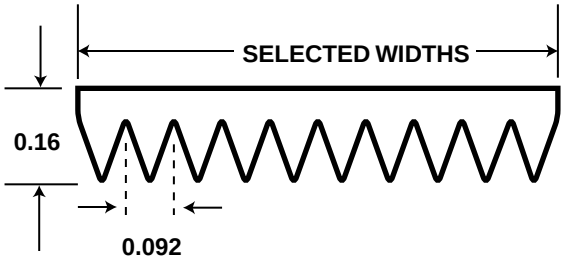

Recommended Sheaves: Carlisle Vee-Rib Type — J

Length Code	Outside Length (inches)	Metric Length Code	Width, Code (Ribs), and Weight (lbs.)			
			4 3/8″	6 9/16″	10 15/16″	16 1-1/2″
180J	18.5	PJ455	.04	.06	.09	.15
190J	19.5	PJ485	.04	.06	.10	.16
200J	20.5	PJ510	.04	.06	.10	.16
220J	22.5	PJ560	.05	.07	.11	.18
240J	24.5	PJ610	.05	.07	.12	.20
260J	26.5	PJ660	.06	.08	.13	.21
280J	28.5	PJ710	.06	.09	.14	.23
290J	29.5	PJ735	.06	.09	.14	.24
300J	30.5	PJ760	.06	.09	.15	.25
310J	31.5	PJ790	.06	.09	.15	.25
320J	32.5	PJ815	.06	.10	.16	.26
340J	34.5	PJ865	.06	.10	.17	.28
360J	36.5	PJ915	.07	.11	.18	.30
380J	38.5	PJ965	.08	.12	.20	.31
400J	40.5	PJ1015	.08	.12	.21	.33
410J	41.5	PJ1040	.08	.12	.21	.33
420J	42.5	PJ1065	.08	.12	.21	.34
430J	43.5	PJ1090	.09	.13	.22	.35
460J	46.5	PJ1170	.09	.14	.24	.38
490J	49.5	PJ1245	.10	.15	.25	.40
520J	52.5	PJ1320	.11	.16	.27	.43
525J	53.0	PJ1335	*.11	*.16	*.27	*.43
550J	55.5	PJ1400	.11	.17	.28	.45
575J	58.0	PJ1460	.11	*.17	*.29	*.47
580J	58.5	PJ1475	.12	.18	.30	.48
610J	61.5	PJ1550	.13	.19	.31	.50
650J	65.5	PJ1650	.13	.20	.33	.53
690J	69.5	PJ1755	.14	.21	.35	.57
730J	73.5	PJ1855	.15	.22	.37	.60
770J	77.5	PJ1955	.16	.24	.40	.63
820J	82.5	PJ2080	.17	.25	.42	.67
840J	84.5	PJ2135	.17	.26	.43	.68
870J	87.5	PJ2210	.18	.27	.45	.71
890J	89.5	PJ2260	.18	*.27	.46	*.73
920J	92.5	PJ2340	.19	.28	.47	.75

*Non-Stock
Sizes not listed available on special order. Request Quotation.

V-BELT NOMINAL DIMENSIONS AND STOCK LENGTHS
VEE-RIB “L” CROSS-SECTION

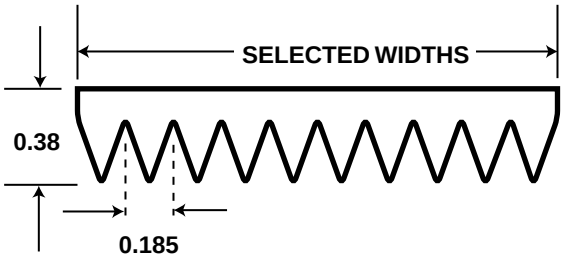

Vee-Rib “L” Cross Section

Length Code	Outside Length (inches)	Metric Length Code	Width, Code (Ribs), and Weight (lbs.)							
			6 1-⅛″	8 1-½″	10 1-⅞″	12 2-¼″	14 2-⅝″	16 3″	18 3-⅜″	20 3-¾″
500L	51.0	PL1270	0.7	1.0	1.2	1.5	1.7	2.0	2.2	2.5
540L	55.0	PL1370	0.8	1.1	1.3	1.6	1.9	2.1	2.4	2.7
560L	57.0	PL1420	0.8	1.1	1.4	1.7	2.0	2.2	2.5	2.8
595L	60.5	PL1510	0.9	1.2	1.5	1.8	2.1	2.4	2.7	3.0
615L	62.5	PL1560	0.9	1.2	1.5	1.8	2.1	2.4	2.7	3.0
635L	64.5	PL1615	0.9	1.2	1.6	1.9	2.2	2.5	2.8	3.1
655L	66.5	PL1665	1.0	1.3	1.6	1.9	2.3	2.6	2.9	3.2
695L	70.5	PL1765	1.0	1.4	1.7	2.1	2.4	2.8	3.1	3.5
725L	73.5	PL1940	1.1	1.4	1.8	2.2	2.5	2.9	3.3	3.7
765L	77.5	PL1945	1.1	1.5	1.9	2.3	2.6	3.0	3.4	3.8
780L	79.0	PL1980	1.1	1.5	1.9	2.3	2.7	3.1	3.5	3.9
795L	80.5	PL2020	1.2	1.6	2.0	2.4	2.8	3.2	3.6	4.0
815L	82.5	PL2070	1.2	1.6	2.0	2.4	2.8	3.2	3.7	4.1
840L	85.0	PL2130	1.2	1.7	2.1	2.5	3.0	3.3	3.8	4.2
865L	87.5	PL2200	1.3	1.7	2.2	2.6	3.0	3.4	3.9	4.3
915L	92.5	PL2320	1.3	1.8	2.3	2.7	3.2	3.6	4.1	4.6
975L	98.5	PL2480	1.4	1.9	2.4	2.9	3.4	3.9	4.4	4.9
990L	100.0	PL2510	1.5	2.0	2.5	3.0	3.5	4.0	4.5	5.0
1065L	107.5	PL2710	1.6	2.1	2.6	3.2	3.7	4.2	4.8	5.3
1120L	113.0	PL2840	1.7	2.2	2.8	3.4	3.9	4.5	5.0	5.6
1150L	116.0	PL2920	1.7	2.3	2.9	3.5	4.0	4.6	5.2	5.8
1215L	122.5	PL3090	1.8	2.4	3.0	3.6	4.2	4.8	5.5	6.1
1230L	124.0	PL3120	1.8	2.5	3.1	3.7	4.3	4.9	5.6	6.2
1295L	130.5	PL3290	1.9	2.6	3.2	3.9	4.5	5.2	5.8	6.5
1310L	132.0	PL3330	2.0	2.6	3.3	4.0	4.6	5.3	5.9	6.6
1455L	146.5	PL3700	2.2	2.9	3.6	4.4	5.1	5.9	6.6	7.3

Sizes not listed available on special order. Request Quotation.

V-BELT NOMINAL DIMENSIONS AND STOCK LENGTHS
VEE-RIB “M” CROSS-SECTION

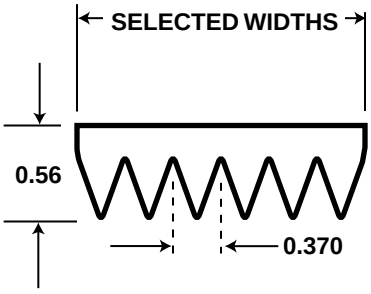

Vee-Rib “M” Cross Section

Length Code	Outside Length (inches)	Metric Length Code	Width, Code (Ribs), and Weight (lbs.)							
			6 1-¼″	8 3″	10 3-¾″	12 4-½″	14 5-¼″	16 6-½″	18 6-¾″	20 7-½″
900M	92.0	PM2290	4.8	6.4	8.0	9.6	11.5	12.8	14.8	16.1
940M	96.0	PM2390	5.0	6.7	8.4	10.0	11.7	13.4	15.1	16.8
990M	101.0	PM2510	5.3	7.0	8.8	10.6	12.8	14.1	15.9	17.6
1060M	108.0	PM2690	5.7	7.5	9.4	11.3	13.2	15.2	17.0	18.9
1150M	117.0	PM2920	6.1	8.2	10.2	12.3	14.3	16.4	18.4	20.5
1185M	120.0	PM3010	6.3	8.4	10.6	12.7	14.8	16.9	19.0	21.1
1230M	125.0	PM3120	6.6	8.8	11.2	13.2	15.4	17.5	19.7	21.9
1310M	133.0	PM3330	7.0	9.3	11.7	14.0	16.3	18.6	21.0	23.4
1390M	141.0	PM3530	7.4	9.9	12.4	14.9	17.3	19.8	22.3	24.8
1470M	149.0	PM3730	7.9	10.5	13.1	15.7	18.3	21.0	23.6	26.2
1550M	157.0	PM3490	8.1	10.9	13.6	16.1	19.4	22.2	24.1	27.4
1610M	163.0	PM4090	8.6	11.5	14.3	17.2	20.0	23.0	25.8	28.7
1650M	167.0	PM4190	8.8	11.8	14.7	17.6	21.0	23.5	26.5	29.4
1760M	178.0	PM4470	9.4	12.5	15.7	18.8	22.0	25.1	28.2	31.4
1830M	185.0	PM4650	9.8	13.0	16.3	19.6	22.8	26.1	29.4	32.6
1980M	200.0	PM5030	10.6	14.1	17.6	21.2	24.7	28.2	31.8	35.3
2130M	215.0	PM5410	11.4	15.2	19.0	22.8	26.6	30.4	34.2	38.0
2410M	243.0	PM6120	12.9	17.2	21.5	25.8	30.1	34.4	38.7	42.9
2560M	258.0	PM6500	13.4	18.2	22.2	27.4	31.7	35.1	41.5	44.8
2710M	273.0	PM6880	14.5	19.3	24.2	29.0	33.8	38.7	43.5	48.3
3010M	303.0	PM7650	16.1	21.5	26.8	32.2	37.6	43.9	48.3	53.6
3310M	333.0	PM8410	17.7	23.6	29.5	35.4	41.3	47.2	53.1	59.1
3610M	363.0	PM9170	19.3	25.7	32.2	38.6	45.1	51.5	57.9	64.4

Sizes not listed available on special order. Request Quotation.

V-BELT NOMINAL DIMENSIONS AND STOCK LENGTHS
DURAPOWER II FHP V-BELT (3L, 4L, 5L)

Recommended Sheaves: Carlisle Durapower FHP Sheaves

V-Belt No. 3L	Outside Length (inches)
3L190	19.0
3L200	20.0
3L210	21.0
3L220	22.0
3L230	23.0
3L240	24.0
3L250	25.0
3L260	26.0
3L270	27.0
3L280	28.0
3L290	29.0
3L300	30.0
3L310	31.0
3L320	32.0
3L330	33.0
3L340	34.0
3L350	35.0
3L360	36.0
3L370	37.0
3L380	38.0
3L390	39.0
3L400	40.0
3L410	41.0
3L420	42.0
3L430	43.0
3L440	44.0
3L450	45.0
3L460	46.0
3L470	47.0
3L480	48.0
3L490	49.0
3L500	50.0
3L510	51.0
3L520	52.0
3L530	53.0
3L540	54.0
3L550	55.0
3L560	56.0
3L570	57.0
3L580	58.0
3L590	59.0
3L600	60.0
3L610	61.0
3L620	62.0
3L630	63.0
3L690	69.0
3L710	71.0
3L740	74.0
3L750	75.0

V-Belt No. 4L	Outside Length (inches)
4L190	19.0
4L200	20.0
4L210	21.0
4L220	22.0

V-Belt No. 4L	Outside Length (inches)
4L230	23.0
4L240	24.0
4L250	25.0
4L260	26.0
4L270	27.0
4L280	28.0
4L290	29.0
4L300	30.0
4L305	30.5
4L310	31.0
4L315	31.5
4L320	32.0
4L330	33.0
4L340	34.0
4L350	35.0
4L360	36.0
4L370	37.0
4L380	38.0
4L390	39.0
4L400	40.0
4L410	41.0
4L420	42.0
4L430	43.0
4L440	44.0
4L450	45.0
4L460	46.0
4L470	47.0
4L480	48.0
4L490	49.0
4L500	50.0
4L510	51.0
4L515	51.5
4L520	52.0
4L530	53.0
4L540	54.0
4L550	55.0
4L560	56.0
4L570	57.0
4L580	58.0
4L590	59.0
4L600	60.0
4L610	61.0
4L620	62.0
4L630	63.0
4L640	64.0
4L650	65.0
4L660	66.0
4L670	67.0
4L680	68.0
4L690	69.0
4L700	70.0
4L710	71.0
4L720	72.0
4L730	73.0
4L740	74.0

V-Belt No. 4L	Outside Length (inches)
4L750	75.0
4L760	76.0
4L770	77.0
4L780	78.0
4L790	79.0
4L800	80.0
4L810	81.0
4L820	82.0
4L830	83.0
4L840	84.0
4L850	85.0

V-Belt No. 5L	Outside Length (inches)
5L230	23.0
5L240	24.0
5L250	25.0
5L260	26.0
5L270	27.0
5L280	28.0
5L290	29.0
5L300	30.0
5L310	31.0
5L320	32.0
5L330	33.0
5L340	34.0
5L350	35.0
5L360	36.0
5L370	37.0
5L380	38.0
5L390	39.0
5L400	40.0
5L410	41.0
5L420	42.0
5L430	43.0
5L440	44.0
5L450	45.0
5L460	46.0
5L470	47.0
5L480	48.0
5L490	49.0
5L500	50.0
5L510	51.0
5L520	52.0
5L530	53.0

V-Belt No. 5L	Outside Length (inches)
5L540	54.0
5L550	55.0
5L560	56.0
5L570	57.0
5L580	58.0
5L590	59.0
5L600	60.0
5L610	61.0
5L620	62.0
5L630	63.0
5L640	64.0
5L650	65.0
5L500	50.0
5L510	51.0
5L520	52.0
5L530	53.0
5L540	54.0
5L550	55.0
5L560	56.0
5L570	57.0
5L580	58.0
5L590	59.0
5L600	60.0
5L610	61.0
5L620	62.0
5L630	63.0
5L640	64.0
5L650	65.0
5L660	66.0
5L670	67.0
5L680	68.0
5L690	69.0
5L700	70.0
5L710	71.0
5L720	72.0
5L730	73.0
5L740	74.0
5L750	75.0
5L760	76.0
5L770	77.0
5L780	78.0
5L790	79.0
5L800	80.0
5L810	81.0
5L820	82.0
5L830	83.0
5L840	84.0
5L850	85.0

V BELT NOMINAL DIMENSIONS AND STOCK LENGTHS

XDV® Xtra Duty V-Belts

"38" SECTION — 3/8" NOMINAL TOP WIDTH

Part No.	Std. Pack	Pack Wt.	Part No.	Std. Pack	Pack Wt.	Part No.	Std. Pack	Pack Wt.
38X150	5	.2	38X330	5	.5	38X510	5	.8
38X160	5	.2	38X340	5	.5	38X520	5	.8
38X170	5	.3	38X350	5	.5	38X530	5	.8
38X180	5	.3	38X360	5	.5	38X540	5	.8
38X190	5	.3	38X370	5	.6	38X550	5	.9
38X200	5	.3	38X380	5	.6	38X560	5	.9
38X210	5	.3	38X390	5	.6	38X570	5	.9
38X220	5	.3	38X400	5	.6	38X580	5	.9
38X230	5	.4	38X410	5	.6	38X590	5	.9
38X240	5	.4	38X420	5	.7	38X600	5	.9
38X250	5	.4	38X430	5	.7	38X610	5	.9
38X260	5	.4	38X440	5	.7	38X620	5	1.0
38X270	5	.4	38X450	5	.7	38X630	5	1.0
38X280	5	.4	38X460	5	.7	38X690	5	1.4
38X290	5	.5	38X470	5	.7	38X710	5	1.5
38X300	5	.5	38X480	5	.7	38X740	5	1.6
38X310	5	.5	38X490	5	.8	38X750	5	1.7
38X320	5	.5	38X500	5	.8			

"48" SECTION — 1/2" NOMINAL TOP WIDTH

48X170	5	.4	48X550	5	1.4	48X920	1	.5
48X180	5	.5	48X560	5	1.5	48X930	1	.5
48X190	5	.5	48X570	5	1.5	48X940	1	.5
48X200	5	.5	48X580	5	1.5	48X950	1	.5
48X210	5	.6	48X590	5	1.5	48X960	1	.5
48X220	5	.6	48X600	5	1.6	48X970	1	.5
48X230	5	.6	48X610	5	1.6	48X980	1	.5
48X240	5	.6	48X620	5	1.6	48X990	1	.5
48X250	5	.7	48X630	5	1.7			
48X260	5	.7	48X640	5	1.7			
48X270	5	.7	48X650	5	1.7			
48X280	5	.7	48X660	5	1.7			
48X290	5	.8	48X670	5	1.8			
48X300	5	.8	48X680	5	1.8			
48X310	5	.8	48X690	5	1.8			
48X320	5	.8	48X700	5	1.8			
48X330	5	.9	48X710	5	1.9			
48X340	5	.9	48X720	5	1.9			
48X350	5	.9	48X730	5	1.9			
48X360	5	.9	48X740	5	1.9			
48X370	5	1.0	48X750	5	2.0			
48X380	5	1.0	48X760	5	2.0			
48X390	5	1.0	48X770	5	2.0			
48X400	5	1.0	48X780	5	2.1			
48X410	5	1.0	48X790	5	2.1			
48X420	5	1.0	48X800	1	.4			
48X430	5	1.0	48X810	1	.4			
48X440	5	1.2	48X820	1	.4			
48X450	5	1.2	48X830	1	.4			
48X460	5	1.2	48X840	1	.4			
48X470	5	1.3	48X850	1	.4			
48X480	5	1.3	48X860	1	.5			
48X490	5	1.3	48X870	1	.5			
48X500	5	1.3	48X880	1	.5			
48X510	5	1.3	48X890	1	.5			
48X520	5	1.4	48X900	1	.5			
48X530	5	1.4	48X910	1	.5			
48X540	5	1.4						

V BELT NOMINAL DIMENSIONS AND STOCK LENGTHS

XDV® Xtra Duty V-Belts

"58" SECTION —21/32" NOMINAL TOP WIDTH

Part No.	Std. Pack	Pack Wt.	Part No.	Std. Pack	Pack Wt.	Part No.	Std. Pack	Pack Wt.
58X230	5	.9	58X550	5	2.1	58X870	1	.7
58X240	5	1.0	58X560	5	2.1	58X880	1	.7
58X250	5	1.0	58X570	5	2.3	58X890	1	.7
58X260	5	1.0	58X580	5	2.3	58X900	1	.7
58X270	5	1.1	58X590	5	2.4	58X910	1	.7
58X280	5	1.1	58X600	5	2.4	58X920	1	.7
58X290	5	1.2	58X610	5	2.4	58X930	1	.7
58X300	5	1.2	58X620	5	2.5	58X940	1	.8
58X310	5	1.2	58X630	5	2.5	58X950	1	.8
58X320	5	1.3	58X640	5	2.6	58X960	1	.8
58X330	5	1.3	58X650	5	2.6	58X970	1	.8
58X340	5	1.4	58X660	5	2.6	58X980	1	.8
58X350	5	1.4	58X670	5	2.7	58X990	1	.8
58X360	5	1.4	58X680	5	2.7			
58X370	5	1.5	58X690	5	2.7			
58X380	5	1.5	58X700	5	2.8			
58X390	5	1.6	58X710	5	2.8			
58X400	5	1.6	58X720	5	2.9			
58X410	5	1.6	58X730	5	2.9			
58X420	5	1.7	58X740	5	3.0			
58X430	5	1.7	58X750	5	3.0			
58X440	5	1.8	58X760	5	3.0			
58X450	5	1.8	58X770	5	3.1			
58X460	5	1.8	58X780	5	3.1			
58X470	5	1.9	58X790	5	3.2			
58X480	5	1.9	58X800	1	.6			
58X490	5	2.0	58X810	1	.6			
58X500	5	2.0	58X820	1	.7			
58X510	5	2.0	58X830	1	.7			
58X520	5	2.1	58X840	1	.7			
58X530	5	2.1	58X850	1	.7			
58X540	5	2.1	58X860	1	.7			

SPECIAL APPLICATION

V-BELTS

SUPER II® V-BELT

The revolutionary Super II® V-belt
with performance that
blows the cover off
conventional wrapped belts.

The advantage of Super II V-belt over conventional wrapped belts.

- **Greater strength** - The innovative center placement of the specially treated, load carrying polyester cord gives the Super II belt better balance and greater strength. It also makes it more resistant to stretching (tension decay), resulting in less frequent retensioning.
- **Longer Life** - The Super II V-belt was designed specifically for severe drives, and tests show that it lasts far longer than conventional V-belts in these types of applications.
- **Better Heat Dissipation** - 100% neoprene rubber compound loaded with Stiflex® fibers found previously only in higher-priced V-belts, dissipates heat more easily. Also, the lower cord placement allows the belt to run cooler with less internally generated heat (hysteresis).
- **Better grip/controlled slippage** - Unique sidewall construction offers optimal gripping characteristics. Raw-edged construction provides improved grip during normal drive loads to enhance efficiency, and fabric layers give the belt controlled slippage for high load situations.
- **Greater flexibility** - Multiple neoprene-impregnated fabric plies, top and bottom, support the load carrying center cord more evenly and resist flex fatigue for maximum flexibility even on small sheaves or backside idler drives.

The revolutionary Super II belt: the super problem solver.

- Solves high torque problems with a specially treated, more durable polyester cord that resists stretching.
- Solves extreme shock load problems with raw-edged sidewalls that allow for controlled slippage.
- Solves belt cracking problems due to heat build-up with a special 100% neoprene rubber compound that dissipates heat better and a central cord placement which reduces internally generated heat.
- Solves small sheave and backside idler drive problems with a center cord that flexes more easily in either direction and multiple fabric plies top and bottom.

A belt that beats the toughest problems.

Many heavy-duty industrial machines demand more than conventional wrapped V-belts can stand. Their punishing drives make ordinary belts crack under pressure. The result: expensive and unnecessary downtime.

Now there's a solution to the consistently costly problem of replacing and retensioning belts. The Super II belt was designed specifically for the most brutal applications. In heavy torque, high horsepower and extreme shock load comparisons, it's not even a contest. The Super II V-belt is stronger, more flexible and lasts far longer than conventional wrapped belts.

SUPER II® V-BELT

Innovative design & construction provide extra strength and stamina.

The secret to the durability of the Super II belt is its unique construction. The central position of the polyester cords in the neoprene rubber core provides greater strength, balance and longer life. Multiple fabric plies, top and bottom, enhance flexibility and Carlisle's unique raw-edge construction gives it a better grip for controlled slippage.

These attributes combined, make the Super II belt superior to conventional wrapped belts in every way.

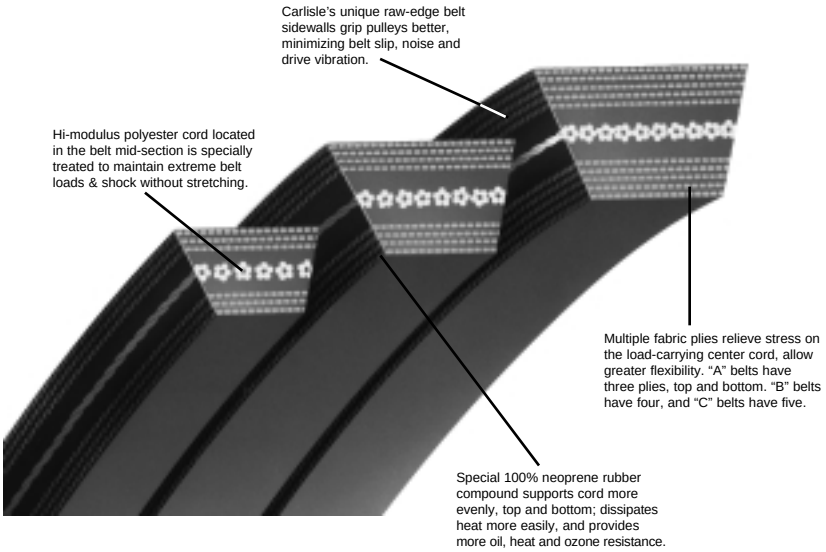

Performance that meets or exceeds specifications.

All of our belts meet or exceed the performance criteria outlined in the Rubber Manufacturers Association standards. In addition, our engineers are recognized for their expertise and are called upon regularly to make important contributions to the development of RMA standards.

Carlisle Super II V-belts conform to the cross section dimensions, length tolerances and matching tolerances outlined in the RMA standards. Our lab testing has consistently shown that Carlisle Super II V-belts exceed the performance criteria outlines by the RMA.

The experience and knowledge of every Carlisle belt engineer and extensive testing is your assurance that Carlisle Super II V-belts will provide superior performance.

Super II comes with an "Iron Clad Guarantee"

Every Carlisle Super II belt is backed with our *"Iron Clad Guarantee"* which says that if you're not satisfied with its performance after you have installed it on your drive, return it to your Carlisle Distributor. He is authorized to: 1] refund the original purchase price, or 2] replace the Super II belt with a comparable belt.

To further ensure the performance of Carlisle Super II belts, we can perform an analysis of your current drive system to make sure it is operating at maximum efficiency. If we discover your system is operating at below optimum levels, we'll specify a Carlisle drive system using a Super II V-belt that will bring it to peak efficiency. In addition, we are also available to conduct on-going maintenance seminars.

Test the Super II V-belt on your toughest drive

The Super II V-belt was field tested for two years on the most severe applications; rock quarry shaker screens, lumber mill tree debarkers and pipe descalers. In every case, it outperformed conventional wrapped belt by a wide margin. But the only test that really counts is the one that you perform on your own equipment.

Try the Super II belt on your toughest drive problem. You'll be so amazed by its incredible endurance that you'll want to put it on all your drives. In fact, we're so sure you'll be pleased with the performance of the Super II V-belt that in the unlikely event you're not satisfied, we'll refund the original purchase price, or replace it with a comparable belt.

The Super II V-belt from Carlisle.
The super problem solver.

CARLISLE ARAMAX BLUE RIBBON V-BELT LINE

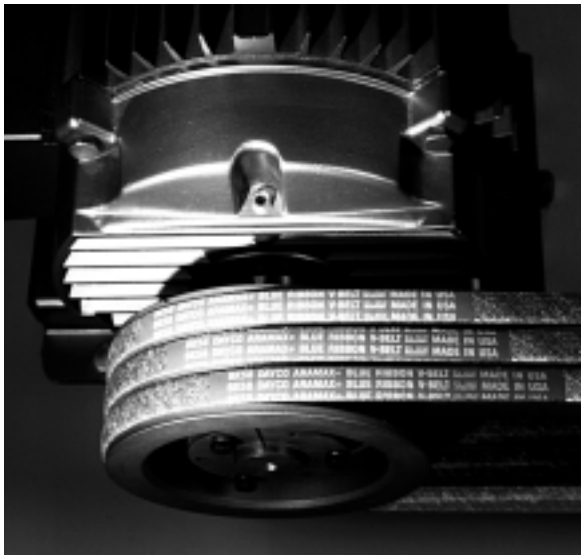

THE ARAMAX ADVANTAGE
Carlisle ARAMAX Blue Ribbon V-belts are engineered for maximum service life on your most abusive classical (A,B,C) belt drives. Utilizing a special Carlisle “bareback” cover fabric and high tensile strength aramid fiber (Kevlar) cord, ARAMAX V-belts provide exceptional service in the harshest environments. Durable performance even when subjected to extreme temperatures, high humidity, moisture, grit, oil, and grease.

ELIMINATE BELT STRETCH
ARAMAX Blue Ribbon V-belts won’t stretch like standard classical V-belts. Consequently they require less retensioning maintenance making them ideally suited for hard to reach drives or equipment in remote locations.

TIGHT MATCHING TOLERANCES
Carlisle ARAMAX V-belts utilize “match numbers” on the belt allowing users to match belts within +/-0.075”, assuring the best possible matching performance available in the industry.

SUPERIOR SHOCK LOAD PROPERTIES
Unique ARAMAX construction components make them an excellent choice for machines operating with frequent shock loads or drives requiring high tension.

STRONGER THAN STEEL
Better than high priced and hard to find steel cable V-belts. ARAMAX V-belts are more flexible, operate more efficiently, and offer increased durability when compared to steel cable while still providing comparable strength characteristics.

LONGER BELT LIFE
Carlisle’s unique “bareback” cover fabric and lower ARAMAX cord position in ARAMAX Blue Ribbon V-belts assures maximum service life on clutching drives and drives with backside idlers.

IDEAL FOR AGRICULTURAL DRIVES
ARAMAX Blue Ribbon V-belts are recommended for many agricultural drive applications as well as commercial outdoor power equipment where severe service life is the norm rather than the exception.

CARLISLE ARAMAX BLUE RIBBON V-BELT LINE

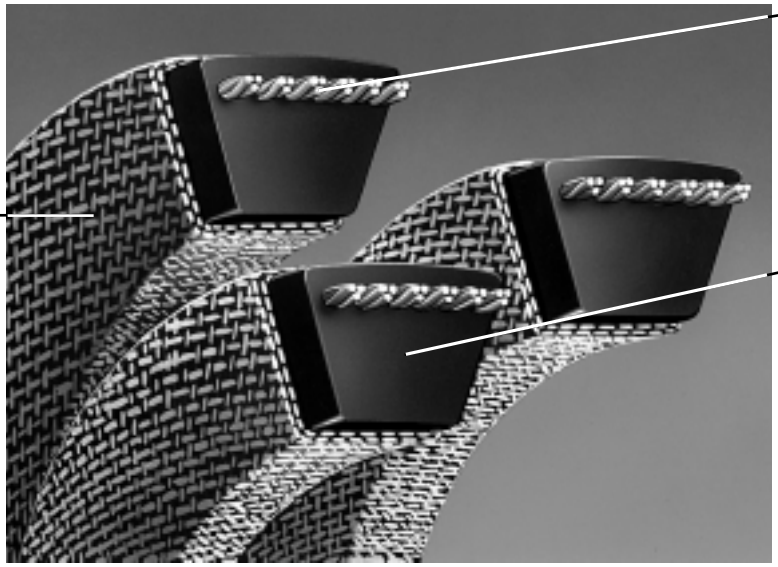

CONSTRUCTION FEATURES:

DOUBLE FABRIC COVERS
Two high grade "SR" fabric covers, Bias cut and stress relieved for superior flexibility and long life. The first layer is coated with a skim layer of premium neoprene rubber on both sides to provide maximum adhesion to the belt core and provide resistance to environmental elements. The second cover only receives a neoprene skim on the side facing the inner cover giving the belt it's unique "salt and pepper" appearance. This exclusive Carlisle bareback fabric cover is ideally suited for high loads, high tension and clutching applications since it is more forgiving than conventional cover designs.

SUPER STRONG ARAMAX FIBER BELT CORD:
Carlisle utilizes a special aramid (Kevlar*) cord for maximum resistance to shock loads. ARAMAX fiber cord also minimizes belt stretch, virtually eliminating the need to re-tension the belt drive. Aramid cord features the strength of steel cable with the flexibility of polyester making it ideally suited for especially challenging industrial drive applications.

HEAVY DUTY RUBBER BELT CORE:
The core of a Carlisle ARAMAX Blue Ribbon V-belt is made up of a blend of high quality SBR compounds and neoprene rubber. The aramid cords are supported on both top and bottom sides with a neoprene cushion stock for maximum cord stability. The compression section features SBR compounds with superior flex and durability characteristics.

IRON-CLAD GUARANTEE
Backed by Carlisle's exclusive IRON-CLAD guarantee. If you're not totally satisfied with ARAMAX drive performance for any reason, return the belt to Carlisle for a complete refund or a replacement belt of comparable value.

Note: ARAMAX Blue Ribbon V-belts do not meet RMA standards for belt static conductivity.

* Kevlar is a registered trademark of DuPont

CARLISLE WEDGE-BAND® CHIPPER DRIVE BELT

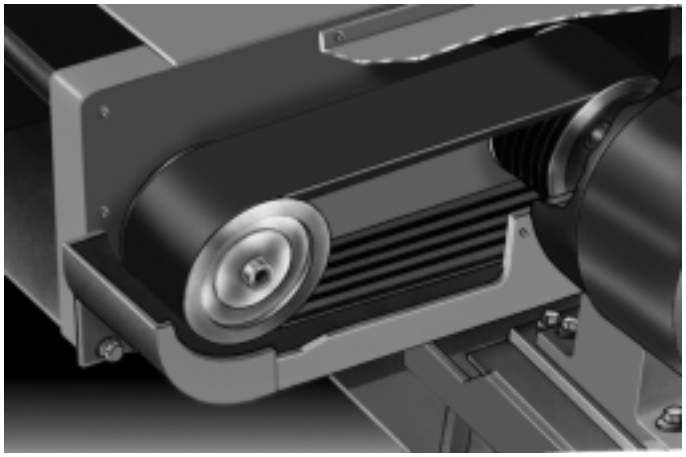

Introduction

The Forest Products industry contains many drive applications using banded wedge-type belts, such as Chipper drives which cut logs into lumber. When machines jam during cutting, or mulching, the belt engages the sheave grooves with great force and begins to generate heat, causing belt breakage and a resulting drive failure. The new Carlisle Wedge-Band Chipper Drive Belt is designed to be less aggressive in this condition than conventional wrapped or raw edge belts. Laminated construction allows belt slip and generates less heat buildup compared to wrapped or raw edge construction belts, giving the machine time to clear itself of the obstruction and extending belt life.

The new Carlisle Wedge-Band Chipper Belt is specially designed and constructed to meet the unique demands of the Forest Products industry. Ideally suited for applications such as chipper saws, debarker drives, head rigs and hogs, the Carlisle Wedge-Band Chipper Drive Belt will outperform your present belt, last longer, and help you reduce replacements, emergency shutdowns and lost production time.

Engineered with a Raw-Edge® laminated construction to provide the optimum balance between controlled transfer of power and slippage to satisfy the unique operating demands of the lumber industry. The Carlisle Wedge-Band Chipper Drive Belt is *designed* to slip during "overload" or drive stall conditions. In addition, by allowing the belt to have controlled slippage during "overload" situations, less heat is generated, resulting in longer belt life.

Construction and Design Features and Benefits

- **Double Fabric Ply Tie-Band**

Instead of using sets of individual belts, this is a banded belt with a patented reinforced top permanently bonded to individual belts during the curing process. This assures pre-matched size and quality and enables all the belts to *pull together* for optimum performance. The Tie-Band prevents wood chips from being lodged in the drive. It also eliminates belt whip and turnover, dampens vibration and absorbs shock.

- **Extra Large Diameter Treated Poly-Cord**

Over sized polyester cord provides added belt strength and stability during peak shock loads to minimize snub breaks. The cord is also chemically treated for maximum resistance to belt stretch.

- **Stiflex® and Graphite Loaded Neoprene Rubber Compounds**

Specially prepared stiflex/graphite compounds provide crosswise rigidity and maximum cord support in the cushion section for smooth running belt operation. Neoprene rubber provides superior resistance to oils, grease, sap and other harmful environmental conditions. These compounds are also static dissipating.

- **Six Plies of Laminated Fabric and Rubber**

Raw-Edge® laminated construction with six separate plies of rubber and fabric bonded together in the compression section of the belt make up the heart of the Wedge-Band Chipper Drive Belt. Raw-Edge laminated construction provides drive efficiency, while the plies in the lower section reduce belt aggressiveness, a combination that provides the key to controlled slippage under peak loads.

A Belt So Tough, It's Backed With Our Iron-Clad Guarantee

If you're not satisfied with the performance of a Carlisle Wedge-Band Chipper Drive Belt after you have installed it on your drive, return it to your Carlisle Distributor. He is authorized to: 1] refund the original purchase price, or 2] replace the Carlisle belt with a comparable belt and refund the difference in price. In addition, every Carlisle belt is guaranteed to provide at least a 25% improvement in belt performance over the belts you're now using, or we'll replace them free. So any way you look at it, you buy fewer belts, reduce downtime and cut costs with Carlisle.

CARLISLE WEDGE-BAND® CHIPPER DRIVE BELT (Continued)

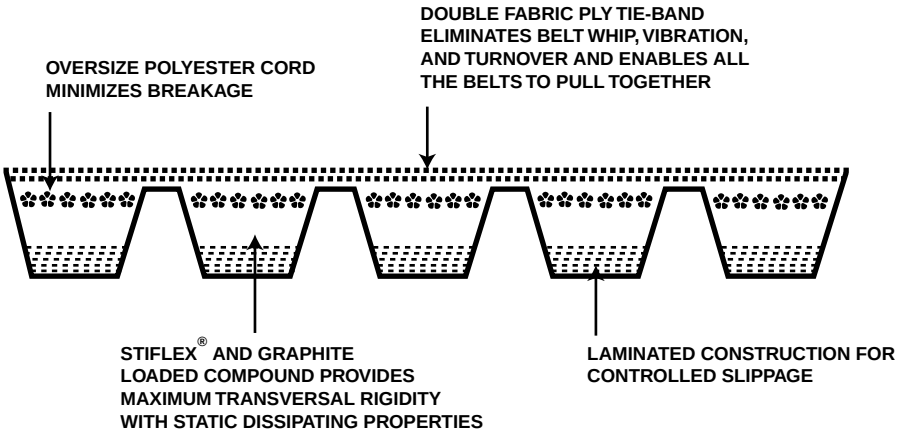

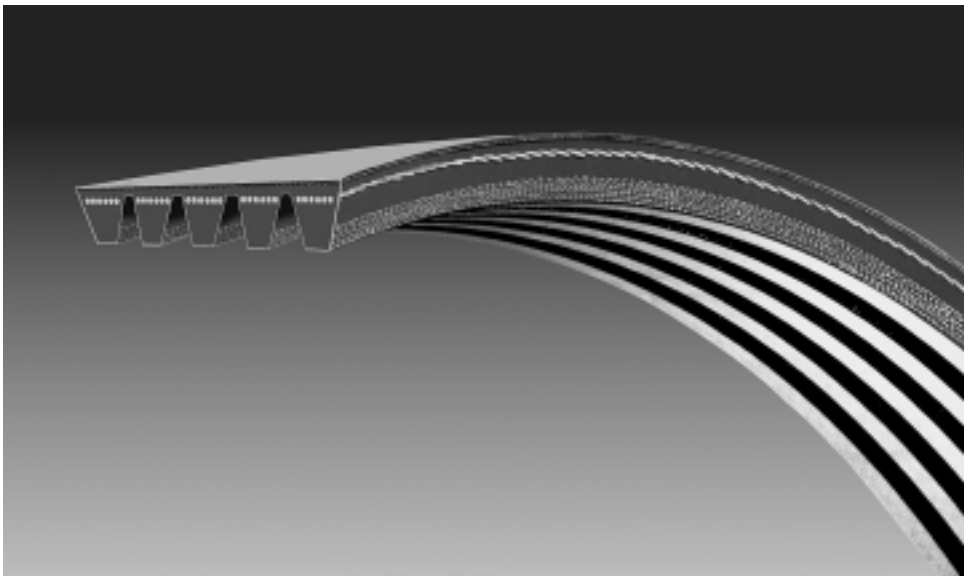

Availability From Stock in Popular Sizes

Carlisle Wedge-Band Chipper Drive Belts are in stock and ready to go to work when you need them. No more long lead times and minimum order quantities due to special made-to-order requirements.

Part Number	Number of ribs	Outside Length (in.)	Weight (lbs.)
R5VL800-5	5	81.1	5.1
R5VL850-5	5	86.1	5.4
R5VL900-5	5	91.1	5.8
R5VL950-5	5	96.1	6.1
R5VL1000-5	5	101.1	6.4
R5VL1060-5	5	107.1	6.8
R5VL1120-5	5	113.1	7.20
R5VL1180-5	5	119.1	7.6
R5VL1320-5	5	133.1	8.5
R5VL1700-5	5	171.1	11.0

Maximum number of ribs available is seven. Other “rib” combinations available upon request. Call Carlisle for the availability of sizes not listed.

CONNECTOR BELTING

Carlisle Connector Belting was especially designed for those industrial drives where endless V-belts cannot be utilized or for emergency situations when endless belts are not readily available. In the latter case, endless V-belts should be installed when the drive is normally down. Carlisle Connector Belting is specially designed for use with connectors.

Carlisle's Connector Belting is oil and heat resistant and meets RMA requirements for static conductivity. The internal construction offers flexibility, belt strength, and excellent resistance to connector pull-out.

NOTE: Connectors cannot be used for repairing or splicing endless V-belts as the construction is different and will result in connector pull-out and drive failure.

STOCK CONNECTOR BELTING SIZES

V-Belt No.	Cross Section	Reel Lengths	Connector Part No.	Weight (lbs.) Per Foot
BA1	A	250′ OR 500′	A-312	.07
BB1	B	250′ OR 500′	B-437	.12
BC8	C	250′ OR 500′	C-531	.20
BD2	D	300′	D-750	.52
BBV0	BB	250′ OR 500′	BB4	.14

APPLICATION TOOLS AND PARTS FOR CONNECTOR BELTING

Connector Belting Type	Connector	Steel Nails 100/pkg*	Holder	Tightener	Rocker Pin Tool	Replac. Parts Kit†	V-Belt Cutter	Extra Blade for Cutter	Piercing Tool
BA1	A-312	A-31274	A-31255	A-31250	——	——	C-6250	C-62523	——
BB1	B-437	B-43774	B-43755	B-43750	B-62540	RPK-1	C-6250	C-62523	B-43760
BC8	C-531	C-53174	C-53155	C-53150	C-62540	RPK-3	C-6250	C-62523	C-62560
BD2	D-750	D-75074	——	D-75050	C-62540	RPK-4	C-6250	C-62523	D-75060
BBVO	BB4	BB474M	BB455	——	B-43740	RPK-2	C-6250	C-62523	——

* Nails for BA1 belting are actually staples (25/pkg.). Nails for BBVO belting are made of monel (25/pkg.).
† Kit includes 2 rocker pins, 2 bushings and link.
Piercing tool includes rocker pin tool.

THORO-LINK V-BELTING

Carlisle Thoro-Link V-belting is a multi-plied polyester fabric polyurethane construction designed for industrial drives where standard endless V-belts are not physically suitable or use in emergency service when endless belts are not readily available.

Carlisle Thoro-Link belting provides a high quality link type belting with excellent resistance to heat, oil and many chemicals. A necessity in any plant as an emergency replacement. Pre-stretched under controlled tension, Thoro-Link belting is strong yet flexible for easy assembly and efficient operation over small sheave diameters. Thoro-Link belting is sold in cartons of 100’ rolls.

Available in supreme construction for maximum horsepower ratings, the Thoro-Link V-belt is available in O, A, B, and C sections with color coded studs for belt section identification. The table below lists some important application information for the Thoro-Link belt.

Part Number	Belt Section	Top Width	Replaces	Color Code	Recommended Sheave	Wt (lbs.) 100’
24S	O - 3/8″	3/8″	3L,O	red	Carlisle FHP	11.5
32S	A - 1/2″	1/2″	4L,A	silver	Carlisle FHP or QD	14.5
42S	B - 21/32″	21/32″	5L,B	green	Carlisle FHP or QD	22.5
56S	C - 7/8″	7/8″	C	blue	Carlisle FHP or QD	32.5

Part No. 4690

CARLISLE THORO-TOOL
For assembly of Thoro-Link V-belting the Carlisle Thoro-Tool is available. This tool provides a safe way to couple and uncouple Thoro-Link Belting. All-steel construction, plated to resist corrosion. Heavy duty spring and tempered steel points for maximum strength.

DOUBLE ANGLE V-BELTS

Carlisle Double Angle V-belts are used to transmit the power from both sides of the belt. For serpentine type drives, Double Angle V-belts flex equally well in both directions. They are made in “AA”, “BB”, and “CC” sections. Recommended sheaves for Double Angle belts are Carlisle QD type, A, B and C sections.

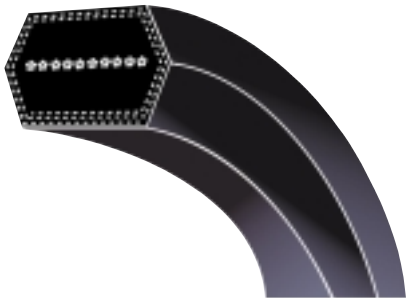

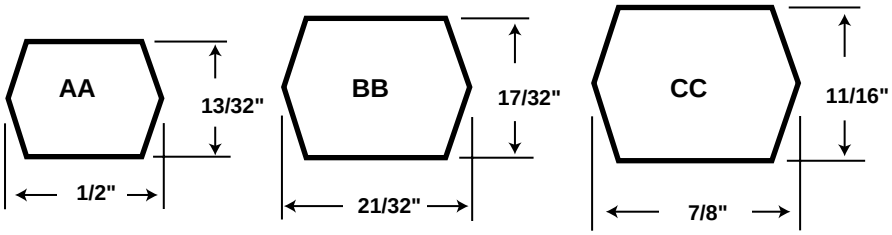

AVAILABLE BELT LENGTHS

V-Belt No.	Outside Length (inches)
AA51	54.4
AA55	58.4
AA60	63.4
AA62	65.4
AA64	67.4
AA66	69.4
AA68	71.4
AA70	73.4
AA75	78.4
AA78	81.4
AA80	83.4
AA85	88.4
AA90	93.4
AA92	95.4
AA96	99.4
AA105	108.4
AA112	115.4
AA120	123.4
AA128	131.4
BB42	46.6
BB43	47.6
BB51	55.6
BB53	57.6
BB54	58.6
BB55	59.6
BB60	64.6
BB64	68.6
BB68	72.6

V-Belt No.	Outside Length (inches)
BB71	75.6
BB73	77.6
BB74	78.6
BB75	79.6
BB76	80.6
BB77	81.6
BB81	85.6
BB83	87.6
BB85	89.6
BB89	93.6
BB90	94.6
BB92	96.6
BB93	97.6
BB94	98.6
BB96	100.6
BB97	101.6
BB103	107.6
BB105	109.6
BB107	111.6
BB108	112.6
BB111	115.6
BB112	116.6
BB116	120.6
BB117	121.6
BB118	122.6
BB120	124.6
BB122	126.6
BB123	127.6
BB124	128.6

V-Belt No.	Outside Length (inches)
BB128	132.6
BB129	133.6
BB130	134.6
BB136	140.6
BB144	148.6
BB155	159.6
BB157	161.6
BB158	162.6
BB160	164.6
BB168	172.6
BB169	173.6
BB170	174.6
BB173	177.6
BB180	184.6
BB182	186.6
BB190	194.6
BB195	199.6
BB210	214.6
BB225	228.1
BB226	229.1
BB228	231.1
BB230	233.1
BB240	243.1
BB255	258.1
BB267	270.1
BB270	273.1
BB273	276.1
BB277	280.1

V-Belt No.	Outside Length (inches)
BB278	281.1
BB285	288.1
BB300	303.1
CC75	81.4
CC81	87.4
CC85	91.4
CC90	96.4
CC96	102.4
CC105	111.4
CC112	118.4
CC120	126.4
CC128	134.4
CC136	142.4
CC144	150.4
CC158	164.4
CC162	168.4
CC173	179.4
CC180	186.4
CC195	201.4
CC210	216.4
CC225	231.4
CC240	244.4
CC270	274.4
CC300	304.4
CC330	334.4
CC360	364.4
CC390	394.4
CC420	424.4

QD SHEAVES

QD MULTIPLE SHEAVES

QD Multiple Sheave

Introduction

Carlisle's Power-Wedge and Classical QD Sheaves are machined from fine grain, gray iron castings and have been designed to give consistently true running sheaves for maximum performance and increased V-belt life.

Each sheave is fixed with a full split tapered QD bushing which can be mounted in two ways. The normal mounting position with the bushing flange next to the motor bearing or reverse mounted which enables the sheave rim to be mounted closer to the bearing.

QD bushings are available with standard keyways, a complete range of bore sizes and are centerless ground for a perfect fit. Both sheave and bushing are given a rust and corrosion resistant zinc phosphate protective finish.

Every Carlisle QD sheave is accurately balanced by precision electronic static balance testing equipment. Where rim speeds may require it, Carlisle can supply dynamically balanced sheaves.

Made to Order Sheaves

Made to Order (MTO) Sheaves can be furnished through Carlisle in a minimum of delivery time, on special order. They are not carried in stock. Carlisle MTO QD sheaves are built with the same degree of quality that goes into producing the standard line. Carlisle will design an MTO drive if desired by completing the Drive Information form on the inside back cover of this manual.

⚠ **NOTE: Sheave users must not attempt to modify sheave grooves; i.e., re-groove worn or damaged sheave grooves.**

QD MULTIPLE SHEAVES

Ductile Iron and Steel Sheaves

When rim speeds exceed 6,500 fpm on a drive, standard statically balanced sheaves cannot be used. In such cases, steel or ductile iron sheaves are required. Carlisle can provide these sheaves upon request. The logarithmic graph in Figure 18 illustrates when steel or ductile iron sheaves should be used, and when dynamic balancing is required.

Note: For rim speeds exceeding 10,000 fpm, consult the factory.

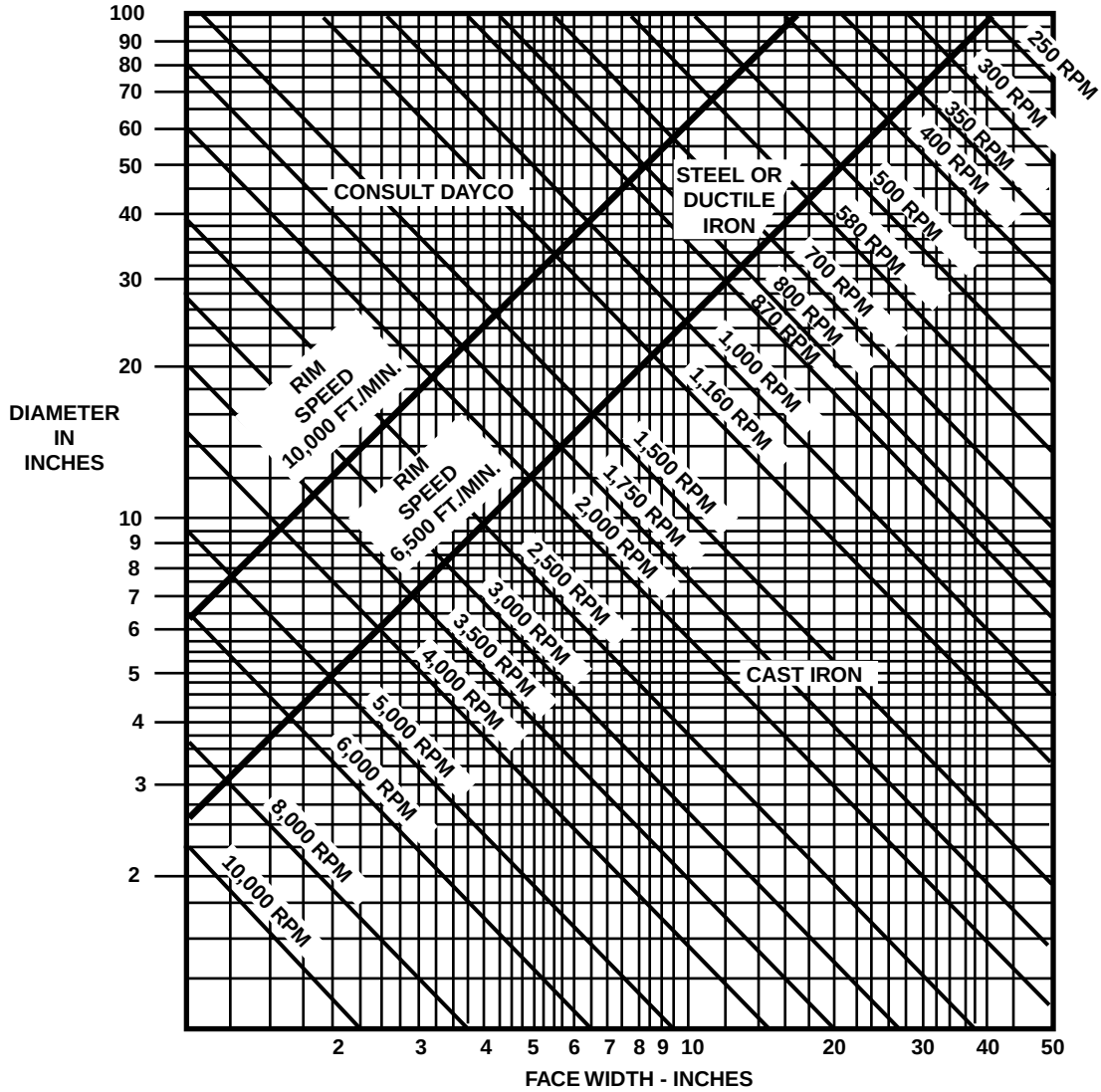

Figure 18

Graph for determining when steel or ductile iron sheaves should be used, and when dynamic balancing is required.

Determination of Rim Speed and Sheave Balancing Requirements

In Table 21 on page 237, in the left-hand column find the diameter of the sheave in consideration. Next, read across the table and find the rpm of the sheave. The value at this intersection point gives the rim speed of the sheave in feet per minute. In Figure 18 above, find the sheave face width at the bottom and the sheave diameter on the left. Read up to the point where the face width (vertical) line intersects the diameter (horizontal) line. If the intersecting point is above the required rpm line, dynamic balance is not recommended. **WARNING ⚠ If the intersecting point falls above 6,500 fpm rim speed, ductile iron or steel should be used.**

Example: It is desired to run a 5 groove, 5V, 12.5″ O.D. sheave at 2500 rpm.

Solution: The face width of a 5-5V 125 is 3-¾″. On the graph, the intersection of 12.5″ O.D. and 3-¾″ face width is located above the 2500 rpm line, so dynamic balance is recommended. **WARNING ⚠ It also falls above the 6500 fpm line, so ductile iron or steel must be used.**

Table 21
Sheave Rim Speeds (Feet per Minute)

Sheave Diameter (inches)	Sheave Revolutions Per Minute																		
	500	**690**	**700**	**800**	**870**	**900**	**1000**	**1100**	**1160**	**1200**	**1300**	**1400**	**1500**	**1600**	**1750**	**1800**	**3000**	**3450**	**3500**
3.0	393	542	550	628	683	707	785	864	911	942	1021	1100	1178	1257	1374	1414	2356	2710	2749
3.2	419	578	586	670	729	754	838	922	972	1005	1089	1173	1257	1340	1466	1508	2513	2890	2932
3.4	445	614	623	712	774	801	890	979	1033	1068	1157	1246	1335	1424	1558	1602	2670	3071	3115
3.6	471	650	660	754	820	848	942	1037	1093	1131	1225	1319	1414	1508	1649	1696	2827	3252	3299
3.8	497	686	696	796	866	895	995	1094	1154	1194	1293	1393	1492	1592	1741	1791	2985	3432	3482
4.0	524	723	733	838	911	942	1047	1152	1215	1257	1361	1466	1571	1676	1833	1885	3142	3613	3665
4.2	550	759	770	880	957	990	1100	1210	1275	1319	1429	1539	1649	1759	1924	1979	3299	3793	3848
4.4	576	795	806	922	1002	1037	1152	1267	1336	1382	1497	1613	1728	1843	2016	2073	3456	3974	4032
4.6	602	831	843	863	1048	1084	1204	1325	1397	1445	1566	1806	1686	1927	2107	2168	3613	4155	4215
4.8	628	867	880	1005	1093	1131	1257	1382	1458	1508	1634	1759	1885	2011	2199	2262	3770	4335	4398
5.0	654	903	916	1047	1139	1178	1309	1440	1518	1571	1702	1833	1963	2094	2291	2356	3927	4516	4581
5.2	681	939	953	1089	1184	1225	1361	1497	1597	1634	1770	1906	2042	2178	2382	2450	4084	4697	4765
5.4	707	975	990	1131	1230	1272	1414	1555	1640	1696	1838	1979	2121	2262	2474	2545	4241	4877	4948
5.6	733	1012	1026	1173	1275	1319	1466	1613	1701	1759	1906	2053	2199	2346	2566	2639	4398	5058	5131
5.8	759	1048	1063	1215	1321	1367	1518	1670	1761	1822	1974	2126	2278	2429	2657	2733	4555	5239	5315
6.0	785	1084	1100	1257	1367	1414	1571	1728	1822	1885	2042	2199	2356	2513	2749	2827	4712	5419	5498
6.2	812	1120	1136	1299	1412	1461	1623	1785	1883	1948	2110	2272	2435	2597	2841	2922	4869	5600	5681
6.4	838	1156	1173	1340	1458	1508	1676	1843	1944	2011	2178	2346	2513	2681	2932	3016	5027	2571	5864
6.6	864	1192	1210	1382	1503	1555	1728	1901	2004	2073	2246	2419	2592	2765	3024	3110	5184	5961	—
6.8	890	1228	1246	1424	1549	1602	1780	1958	2065	2136	2314	2492	2670	2848	3115	3204	5341	—	—
7.0	916	1264	1283	1466	1594	1649	1833	2016	2126	2199	2392	2566	2749	2932	3207	3299	5498	—	—
7.2	942	1301	1319	1508	1640	1696	1885	2073	2187	2262	2450	2639	2827	3016	3299	3393	5655	—	—
7.4	969	1337	1356	1550	1685	1744	1937	2131	2247	2325	2519	2712	2906	3100	3390	3487	5812	—	—
7.5	982	1355	1374	1571	1708	1767	1963	2160	2278	2356	2553	2749	2945	3142	3436	3534	5890	—	—
8.0	1047	1445	1466	1676	1822	1885	2094	2304	2429	2513	2723	2932	3142	3351	3665	3770	—	—	—
8.5	1113	1535	1558	1780	1936	2003	2225	2448	2581	2670	2893	3115	3338	3560	3894	4006	—	—	—
9.0	1178	1626	1649	1885	2050	2121	2356	2392	2733	2827	3063	3299	3534	3770	4123	4241	—	—	—
10.0	1309	1806	1833	2094	2278	2356	2618	2880	3037	3142	3403	3665	3927	4189	4581	4712	—	—	—
11.0	1440	1987	2016	2304	2505	2592	2880	3168	3341	3456	3744	4032	4320	4608	5040	5184	—	—	—
12.0	1571	2168	2199	2513	2733	2827	3142	3456	3644	3770	4084	4398	4712	5027	5498	5655	—	—	—
13.0	1702	2348	2382	2723	2961	3063	3403	3744	3948	4084	4424	4765	5105	5445	5956	—	—	—	—
14.0	1833	2529	2566	2932	3189	3299	3665	4032	4252	4398	4765	5131	5498	5864	—	—	—	—	—
15.0	1963	2710	2749	3142	3416	3534	3927	4320	4555	4712	5105	5498	5890	—	—	—	—	—	—
16.0	2094	2890	2932	3351	3644	3770	4189	4608	4859	5027	5445	5864	—	—	—	—	—	—	—
17.0	2225	3071	3115	3560	3872	4006	4451	4896	5163	5341	5786	—	—	—	—	—	—	—	—
18.0	2356	3252	3299	3770	4100	4241	4712	5184	5466	5655	—	—	—	—	—	—	—	—	—
19.0	2487	3432	3482	3979	4328	4477	4974	5472	5770	5969	—	—	—	—	—	—	—	—	—
20.0	2618	3613	3665	4189	4555	4712	5236	5760	—	—	—	—	—	—	—	—	—	—	—
21.0	2749	3793	3848	4398	4783	4948	5498	—	—	—	—	—	—	—	—	—	—	—	—
22.0	2880	3974	4032	4608	5011	5184	5760	—	—	—	—	—	—	—	—	—	—	—	—
23.0	3011	4155	4215	4817	5239	5419	—	—	—	—	—	—	—	—	—	—	—	—	—
24.0	3142	4335	4398	5027	5466	5655	—	—	—	—	—	—	—	—	—	—	—	—	—
25.0	3272	4516	4581	5236	5694	5890	—	—	—	—	—	—	—	—	—	—	—	—	—
26.0	3403	4697	4765	5445	5922	—	—	—	—	—	—	—	—	—	—	—	—	—	—
27.0	3534	4877	4948	5655	—	—	—	—	—	—	—	—	—	—	—	—	—	—	—
28.0	3665	5058	5131	5864	—	—	—	—	—	—	—	—	—	—	—	—	—	—	—
29.0	3796	5239	5315	—	—	—	—	—	—	—	—	—	—	—	—	—	—	—	—
30.0	3927	5419	5498	—	—	—	—	—	—	—	—	—	—	—	—	—	—	—	—

CARLISLE POWER-WEDGE QD SHEAVES — STOCK SIZES

The sheaves listed below are all stock sizes. The dimensions given are with the bushings in place. When ordering specify the bushing, if required, and the bore size. The figure following the letter in the "Type" column indicates the sheave construction: 1 — Solid, 2 — Web, 3 — Arms.

3V Dimensions (inches)

O.D. ◇	I.D.	1 Groove *F = 11/16							2 Groove F = 1 3/32						
		Bush	Type	E	K	L	M	Wt.	Bush	Type	E	K	L	M	Wt.
2.20†	—	JA	E1	19/32	7/16	1	29/32	0.9	JA	E1	1	7/16	1	29/32	1.1
2.35†	—	JA	E1	19/32	7/16	1	29/32	1.2	JA	E1	1	7/16	1	29/32	1.4
2.50	—	JA	E1	19/32	7/16	1	29/32	1.3	JA	E1	1	7/16	1	29/32	1.5
2.65	2.00	JA	D1	13/32	1/16	1	3/32	0.9	JA	D1	11/32	1/8	1	7/16	1.2
2.80	2.00	JA	D1	13/32	1/16	1	3/32	1.0	JA	D1	11/32	1/8	1	7/16	1.3
3.00	2.00	JA	D1	13/32	1/16	1	3/32	1.1	JA	D1	11/32	1/8	1	7/16	1.5
3.15	2.00	JA	D1	13/32	1/32	1	3/32	1.2	JA	D1	11/32	1/8	1	7/16	1.7
3.35	2.00	JA	D1	13/32	1/16	1	3/32	1.4	SH	D1	7/16	1/8	1 1/4	9/32	1.9
3.65	2.68	SH	C1	9/16	0	1 1/4	0	2.0	SH	D1	7/16	1/8	1 1/4	9/32	2.4
4.12	2.88	SH	C1	9/16	0	1 1/4	0	2.5	SH	D1	1/4	5/16	1 1/4	3/32	2.9
4.50	3.18	SH	C1	9/16	0	1 1/4	0	3.0	SH	D1	1/4	5/16	1 1/4	3/32	3.5
4.75	3.44	SH	C1	9/16	0	1 1/4	0	3.3	SH	D1	1/4	5/16	1 1/4	3/32	3.9
5.00	3.68	SH	C1	9/16	0	1 1/4	0	3.6	SH	D1	1/4	5/16	1 1/4	3/32	4.2
5.30	4.00	SH	C1	9/16	0	1 1/4	0	3.8	SH	D1	1/4	5/16	1 1/4	3/32	4.7
5.60	4.25	SH	C1	9/16	0	1 1/4	0	4.2	SH	D1	1/4	5/16	1 1/4	3/32	5.3
6.00	4.69	SH	C2	9/16	0	1 1/4	0	4.2	SH	D1	1/4	5/16	1 1/4	3/32	6.5
6.50	5.25	SH	C2	9/16	0	1 1/4	0	4.6	SDS	D1	5/16	5/16	1 5/16	3/32	5.8
6.90	5.62	SH	C2	9/16	0	1 1/4	0	4.0	SDS	D2	5/16	5/16	1 5/16	3/32	6.7
8.00	6.68	SDS	C2	5/8	0	1 5/16	0	7.0	SDS	D3	5/16	5/16	1 5/16	3/32	6.4
10.60	9.25	SDS	D3	5/8	0	1 5/16	1/16	8.1	SK	C3	15/32	1/4	1 7/8	5/16	13.1
14.00	12.62	SK	C3	21/32	0	1 7/8	11/32	14.4	SK	C3	15/32	1/4	1 7/8	5/16	17.4
19.00	17.50	SK	C3	21/32	0	1 7/8	11/32	20.6	SK	C3	15/32	1/4	1 7/8	5/16	24.2
25.00	23.56	—	—	—	—	—	—	—	SF	C3	7/16	1/4	2	15/32	40.7

*F = 3/4 for 10.60 inches O.D. F = 13/16 for 14.00 inches and 19.00 inches O.D.

O.D. ◇	I.D.	3 Groove *F = 1½							4 Groove F = 1 29/32						
		Bush	Type	E	K	L	M	Wt.	Bush	Type	E	K	L	M	Wt.
2.50†	—	JA	E1	1 13/32	7/16	1	29/32	1.8	—	—	—	—	—	—	—
2.65	2.00	JA	E1	27/32	-1/8	1	11/32	1.5	JA	E1	1 1/4	-1/8	1	11/32	1.8
2.80	2.00	JA	E1	27/32	-1/8	1	11/32	1.6	JA	E1	1 1/4	-1/8	1	11/32	1.9
3.00	1.81	SH	E1	1 3/16	3/8	1 1/4	15/16	2.3	SH	E1	1 19/32	3/8	1 1/4	15/16	2.6
3.15	1.81	SH	E1	1 3/16	3/8	1 1/4	15/16	2.6	SH	E1	1 19/32	3/8	1 1/4	15/16	3.0
3.35	2.68	SH	D1	7/16	1/8	1 1/4	11/16	2.4	SH	D1	7/16	1/8	1 1/4	1 3/32	2.8
3.65	2.68	SH	D1	7/16	1/8	1 1/4	11/16	3.0	SH	D1	7/16	1/8	1 1/4	1 3/32	3.6
4.12	2.88	SH	A1	1/8	11/16	1 1/4	1/8	3.4	SH	A1	1/4	13/16	1 1/4	11/32	3.9
4.50	3.31	SDS	A1	1/16	11/16	1 5/16	1/8	4.1	SDS	A1	3/16	13/16	1 5/16	13/32	4.5
4.75	3.44	SDS	A1	1/16	11/16	1 5/16	1/8	4.6	SDS	A1	3/16	13/16	1 5/16	13/32	5.1
5.00	3.68	SDS	A1	1/16	11/16	1 5/16	1/8	5.0	SDS	A1	3/16	13/16	1 5/16	13/32	5.6
5.30	4.00	SDS	A1	1/16	11/16	1 5/16	1/8	5.6	SDS	A1	3/16	13/16	1 5/16	13/32	6.1
5.60	4.31	SDS	A1	1/16	11/16	1 5/16	1/8	6.2	SDS	A1	3/16	13/16	1 5/16	13/32	6.7
6.00	4.69	SDS	A1	1/16	11/16	1 5/16	1/8	7.0	SK	D1	3/32	5/8	1 7/8	1/8	9.8
6.50	5.25	SDS	A2	1/16	11/16	1 5/16	1/8	6.8	SK	D1	3/32	5/8	1 7/8	1/8	11.3
6.90	5.62	SDS	A2	1/16	11/16	1 5/16	1/8	7.4	SK	D1	3/32	5/8	1 7/8	1/8	12.9
8.00	6.68	SK	D2	15/32	1/4	1 7/8	3/32	10.6	SK	D2	3/32	5/8	1 7/8	1/8	12.1
10.60	9.25	SK	D3	15/32	1/4	1 7/8	3/32	14.7	SK	D3	3/32	5/8	1 7/8	1/8	17.3
14.00	12.62	SK	D3	15/32	1/4	1 7/8	3/32	21.1	SK	D3	3/32	5/8	1 7/8	1/8	24.1
19.00	17.62	SF	C3	7/16	1/4	2	1/16	36.3	SF	C3	1/16	5/8	2	1/32	39.3
25.00	23.56	SF	C3	7/16	1/4	2	1/16	45.0	SF	C3	1/16	5/8	2	1/32	58.3
33.50	31.94	SF	C3	7/16	1/4	2	1/16	73.8	E	C3	13/32	1/2	2 5/8	5/16	106.3

◇ P.D. = O.D. minus .05 inches. †Recommended for use with Power-Wedge Cogged-belts only.
Weights for all bushed items are approximate and include the bushing.

CARLISLE POWER-WEDGE QD SHEAVES — STOCK SIZES

3V Dimensions (inches)

O.D. ◇	I.D.	5 Groove *F = 2 5/16							6 Groove F = 2 23/32						
		Bush	Type	E	K	L	M	Wt.	Bush	Type	E	K	L	M	Wt.
4.75	3.44	SDS	A1	3/16	13/16	1 5/16	13/16	5.7	SK	E1	1 7/16	1/8	1 7/8	19/32	7.2
5.00	3.68	SDS	A1	3/16	13/16	1 5/16	13/16	6.2	SK	E1	1 7/16	1/8	1 7/8	19/32	8.0
5.30	4.00	SK	A1	7/32	15/16	1 7/8	7/32	8.2	SK	A1	19/32	1 5/16	1 7/8	1/4	8.9
5.60	4.31	SK	A1	7/32	15/16	1 7/8	7/32	9.1	SK	A1	19/32	1 5/16	1 7/8	1/4	9.8
6.00	4.69	SK	A1	7/32	15/16	1 7/8	7/32	10.5	SK	A1	19/32	1 5/16	1 7/8	1/4	11.2
6.50	5.25	SK	A1	7/32	15/16	1 7/8	7/32	12.1	SK	A1	19/32	1 5/16	1 7/8	1/4	12.9
6.90	5.62	SK	A1	7/32	15/16	1 7/8	7/32	13.6	SK	A1	19/32	1 5/16	1 7/8	1/4	14.5
8.00	6.68	SK	A2	7/32	15/16	1 7/8	7/32	13.6	SK	A2	5/32	7/8	1 7/8	11/16	14.7
10.60	9.25	SK	A3	7/32	15/16	1 7/8	7/32	18.9	SF	A3	3/16	7/8	2	17/32	22.1
14.00	12.62	SF	A3	3/16	7/8	2	1/8	29.7	SF	A3	3/16	7/8	2	17/32	31.9
19.00	17.62	SF	A3	3/16	7/8	2	1/8	46.0	E	B3	3/32	1	2 5/8	0	56.5
25.00	23.56	E	C3	9/32	5/8	2 5/8	1/32	73.0	E	B3	3/32	1	2 5/8	0	84.6
33.50	31.94	E	C3	9/32	5/8	2 5/8	1/32	112.7	E	B3	3/32	1	2 5/8	0	128.9

O.D. ◇	I.D.	8 Groove *F = 3 17/32							10 Groove F = 4 11/32						
		Bush	Type	E	K	L	M	Wt.	Bush	Type	E	K	L	M	Wt.
4.75	3.88	SK	E1	2 1/4	1/8	1 7/8	19/32	9.6	SK	E1	3 1/16	1/8	1 7/8	19/32	9.6
5.00	3.88	SK	E1	2 1/4	1/8	1 7/8	19/32	9.3	SK	E1	3 1/16	1/8	1 7/8	19/32	10.5
5.30	4.00	SK	A1	19/32	1 5/16	1 7/8	1 1/16	10.3	SK	A1	23/32	1 7/16	1 7/8	1 3/4	11.6
5.60	4.31	SK	A1	19/32	1 5/16	1 7/8	1 1/16	11.3	SK	A1	23/32	1 7/16	1 7/8	1 3/4	12.7
6.00	4.69	SK	A1	19/32	1 5/16	1 7/8	1 1/16	12.8	SK	A1	23/32	1 7/16	1 7/8	1 3/4	14.4
6.50	5.25	SK	A1	19/32	1 5/16	1 7/8	1 1/16	14.6	SK	A1	23/32	1 7/16	1 7/8	1 3/4	16.2
6.90	5.62	SK	A1	19/32	1 5/16	1 7/8	1 1/16	16.3	SK	A1	23/32	1 7/16	1 7/8	1 3/4	18.1
8.00	6.68	SF	A1	7/16	1 15/16	2	1 3/32	22.0	SF	A1	13/16	1 1/2	2	1 17/32	24.2
10.60	9.25	SF	A3	7/16	1 1/8	2	1 3/32	25.2	E	A2	11/32	1 1/4	2 5/8	1 3/8	40.1
14.00	12.62	E	A3	11/32	1 1/4	2 5/8	9/16	50.3	E	A3	11/32	1 1/4	2 5/8	1 3/8	54.7
19.00	17.62	E	A3	11/32	1 1/4	2 5/8	9/16	68.4	E	A3	11/32	1 1/4	2 5/8	1 3/8	77.6
25.00	23.56	E	A3	11/32	1 1/4	2 5/8	9/16	99.3	F	A3	1/4	1 5/16	3 5/8	15/32	126.2
33.50	31.94	F	B3	0	1 1/16	3 5/8	3/32	154.7	F	A3	1/4	1 5/16	3 5/8	15/32	188.4

◇ P.D. = O.D. minus .05 inches.

Weights for all bushed items are approximate and include the bushing.

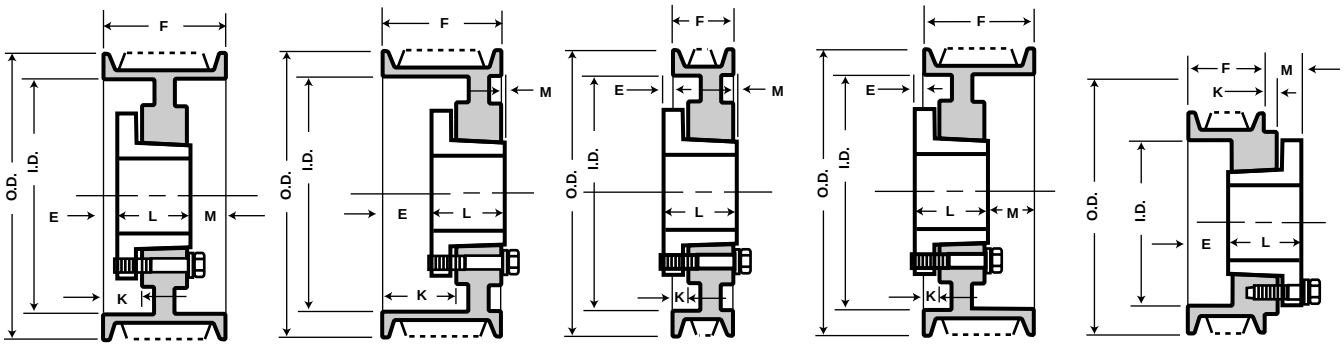

Type A Type B Type C Type D Type E

CARLISLE POWER-WEDGE QD SHEAVES — STOCK SIZES

The sheaves listed below are all stock sizes. The dimensions given are with the bushings in place. When ordering specify the bushing, if required, and the bore size. The figure following the letter in the "Type" column indicates the sheave construction: 1 — Solid, 2 — Web, 3 — Arms.

5V Dimensions (inches)

O.D. ◇	I.D.	2 Groove F = 1 11/16							3 Groove F = 2 3/8						
		Bush	Type	E	K	L	M	Wt.	Bush	Type	E	K	L	M	Wt.
4.4 †	2.72	SH	A1	1/8	11/16	1 1/4	5/16	4.0	SDS	E1	1 11/16	0	1 5/16	5/8	5.2
4.65 †	2.94	SDS	E1	13/16	3/16	1 5/16	5/16	4.3	SDS	E1	1 11/16	0	1 5/16	5/8	5.8
4.9 †	3.25	SDS	A1	1/16	11/16	1 5/16	5/16	4.8	SDS	A1	7/16	1 1/16	1 5/16	5/8	6.3
5.2 †	3.50	SDS	A1	1/16	11/16	1 5/16	5/16	5.4	SDS	A1	7/16	1 1/16	1 5/16	5/8	6.6
5.5 †	3.75	SDS	A1	1/16	11/16	1 5/16	5/16	6.1	SDS	A1	7/16	1 1/16	1 5/16	5/8	7.4
5.9 †	4.18	SDS	A1	1/16	11/16	1 5/16	5/16	6.8	SDS	A1	7/16	1 1/16	1 5/16	5/8	8.3
6.3 †	4.56	SK	D1	9/32	7/16	1 7/8	3/32	10.7	SK	A1	11/32	1	1 7/8	5/32	11.2
6.7 †	4.94	SK	D1	9/32	7/16	1 7/8	3/32	11.0	SK	A1	11/32	1	1 7/8	5/32	13.8
7.1	5.31	SK	D1	9/32	7/16	1 7/8	3/32	13.4	SF	A1	5/16	1	2	1/16	14.8
7.5	5.62	SK	D1	9/32	7/16	1 7/8	3/32	14.0	SF	A1	5/16	1	2	1/16	16.6
8.0	6.12	SK	D1	9/32	7/16	1 7/8	3/32	15.9	SF	A1	5/16	1	2	1/16	18.7
8.5	6.62	SK	D2	9/32	7/16	1 7/8	3/32	14.2	SF	A1	5/16	1	2	1/16	21.0
9.0	7.12	SK	D2	9/32	7/16	1 7/8	3/32	15.4	SF	A1	5/16	1	2	1/16	23.3
9.25	7.44	SK	D2	9/32	7/16	1 7/8	3/32	15.7	SF	A2	5/16	1	2	1/16	20.4
9.75	7.94	SK	D3	9/32	7/16	1 7/8	3/32	14.6	SF	A2	5/16	1	2	1/16	22.7
10.3	8.50	SK	D3	9/32	7/16	1 7/8	3/32	16.5	SF	A2	5/16	1	2	1/16	26.1
10.9	9.12	SK	D3	9/32	7/16	1 7/8	3/32	17.8	SF	A2	5/16	1	2	1/16	26.7
11.3	9.38	SK	D3	9/32	7/16	1 7/8	3/32	18.3	SF	A3	5/16	1	2	1/16	24.2
11.8	9.94	SK	D3	9/32	7/16	1 7/8	3/32	19.1	SF	A3	5/16	1	2	1/16	26.7
12.5	10.62	SF	C3	1/4	7/16	2.	1/16	21.9	E	C3	5/32	3/4	2 5/8	3/32	35.2
13.2	11.31	SF	C3	1/4	7/16	2	1/16	23.1	E	C3	5/32	3/4	2 5/8	3/32	37.1
14.0	12.12	SF	C3	1/4	7/16	2	1/16	25.9	E	C3	5/32	3/4	2 5/8	3/32	41.0
15.0	13.12	SF	C3	1/4	7/16	2	1/16	27.7	E	C3	5/32	3/4	2 5/8	3/32	42.6
16.0	14.12	SF	C3	1/4	7/16	2	1/16	30.1	E	C3	5/32	3/4	2 5/8	3/32	45.1
18.7	16.75	SF	C3	1/4	7/16	2	1/16	40.0	E	C3	5/32	3/4	2 5/8	3/32	54.4
21.2	19.25	SF	C3	1/4	7/16	2	1/16	45.0	E	C3	5/32	3/4	2 5/8	3/32	63.0
23.6	21.62	E	C3	5/32	3/4	2 5/8	25/32	61.7	E	C3	5/32	3/4	2 5/8	3/32	76.0
28.0	26.00	E	C3	5/32	3/4	2 5/8	25/32	77.5	E	C3	5/32	3/4	2 5/8	3/32	103.6
31.5	29.50	—	—	—	—	—	—	—	F	C3	1/2	9/16	3 5/8	3/4	128.4
37.5	35.25	—	—	—	—	—	—	—	F	C3	1/2	9/16	3 5/8	3/4	161.9
50.0	47.38	—	—	—	—	—	—	—	F	C3	1/2	9/16	3 5/8	3/4	276.9

O.D. ◇	I.D.	4 Groove F = 3 1/16							5 Groove F = 3 3/4						
		Bush	Type	E	K	L	M	Wt.	Bush	Type	E	K	L	M	Wt.
4.4 †	2.70	SD	E1	1 7/8	0	1 13/16	5/8	6.4	SD	E1	2 9/16	0	1 13/16	5/8	7.3
4.65 †	2.94	SD	E1	1 7/8	0	1 13/16	5/8	7.1	SD	E1	2 9/16	0	1 13/16	5/8	8.1
4.9 †	3.25	SD	A1	11/16	1 5/16	1 13/16	9/16	7.7	SD	A1	11/16	1 5/16	1 13/16	1 1/4	8.7
5.2 †	3.50	SD	A1	11/16	1 5/16	1 13/16	9/16	8.7	SD	A1	11/16	1 5/16	1 13/16	1 1/4	9.9
5.5 †	3.75	SD	A1	11/16	1 5/16	1 13/16	9/16	9.8	SD	A1	11/16	1 5/16	1 13/16	1 1/4	11.1
5.9 †	4.18	SD	A1	11/16	1 5/16	1 13/16	9/16	11.1	SK	A1	19/32	1 5/16	1 7/8	1 9/32	12.6
6.3 †	4.56	SK	A1	19/32	1 5/16	1 7/8	10/32	12.7	SK	A1	19/32	1 5/16	1 7/8	1 9/32	14.3
6.7 †	4.94	SK	A1	19/32	1 5/16	1 7/8	10/32	14.3	SF	A1	5/8	1 5/16	2	1 1/8	16.6
7.1	5.31	SF	A1	3/8	1 1/16	2	11/16	16.6	SF	A1	11/16	1 3/8	2	1 1/16	19.9
7.5	5.62	SF	A1	3/8	1 1/16	2	11/16	18.7	SF	A1	11/16	1 3/8	2	1 1/16	20.8
8.0	6.12	E	B1	17/32	1 7/16	2 5/8	3/32	25.5	E	A1	27/32	1 3/4	2 5/8	9/32	27.8
8.5	6.62	E	B1	17/32	1 7/16	2 5/8	3/32	28.4	E	A1	27/32	1 3/4	2 5/8	9/32	30.8
9.0	7.12	E	B1	17/32	1 7/16	2 5/8	3/32	31.5	E	A1	27/32	1 3/4	2 5/8	9/32	34.1
9.25	7.44	E	B1	17/32	1 7/16	2 5/8	3/32	32.8	E	A1	27/32	1 3/4	2 5/8	9/32	35.4
9.75	7.94	E	B2	17/32	1 7/16	2 5/8	3/32	36.1	E	A2	27/32	1 3/4	2 5/8	9/32	38.8
10.3	8.50	E	B2	17/32	1 7/16	2 5/8	3/32	33.9	E	A2	27/32	1 3/4	2 5/8	9/32	37.3
10.9	9.12	E	B2	17/32	1 7/16	2 5/8	3/32	36.0	E	A2	27/32	1 3/4	2 5/8	9/32	39.5
11.3	9.38	E	B2	17/32	1 7/16	2 5/8	3/32	40.0	E	A2	27/32	1 3/4	2 5/8	9/32	43.6
11.8	9.94	E	B2	17/32	1 7/16	2 5/8	3/32	42.7	E	A2	27/32	1 3/4	2 5/8	9/32	45.4
12.5	10.62	E	B3	17/32	1 7/16	2 5/8	3/32	40.6	E	A3	27/32	1 3/4	2 5/8	9/32	44.4
13.2	11.31	E	B3	17/32	1 7/16	2 5/8	3/32	42.7	E	A3	27/32	1 3/4	2 5/8	9/32	46.8
14.0	12.12	E	B3	17/32	1 7/16	2 5/8	3/32	47.0	E	A3	27/32	1 3/4	2 5/8	9/32	52.0
15.0	13.12	E	B3	17/32	1 7/16	2 5/8	3/32	47.7	E	A3	27/32	1 3/4	2 5/8	9/32	53.9
16.0	14.12	E	B3	17/32	1 7/16	2 5/8	3/32	51.0	E	A3	27/32	1 3/4	2 5/8	9/32	57.4
18.7	16.75	E	A3	17/32	1 1/4	2 5/8	3/32	64.1	F	B3	1/4	1 5/16	3 5/8	1/8	86.9
21.2	19.25	E	A3	11/32	7/8	2 5/8	3/32	75.0	F	B3	1/4	1 5/16	3 5/8	1/8	97.3
23.6	21.62	F	C3	3/16	7/8	3 5/8	3/8	98.2	F	B3	1/4	1 5/16	3 5/8	1/8	111.9
28.0	26.00	F	C3	3/16	7/8	3 5/8	3/8	125.5	F	B3	1/4	1 5/16	3 5/8	1/8	143.1
31.5	29.50	F	C3	3/16	7/8	3 5/8	3/8	141.6	J	C3	1/4	1	4 1/2	1/2	174.6
37.5	35.25	F	C3	3/16	7/8	3 5/8	3/8	192.2	J	C3	1/4	1	4 1/2	1/2	237.5
50.0	47.38	J	C3	9/16	11/16	4 1/2	7/8	317.6	J	C3	1/4	1	4 1/2	1/2	344.6

◇ P.D. = O.D. minus .10 inches. † Recommended for use with Power-Wedge Cogged-belts only.
Weights for all bushed items are approximate and include the bushing.

CARLISLE POWER-WEDGE QD SHEAVES — STOCK SIZES

5V Dimensions (inches)

O.D. ◇	I.D.	6 Groove F = 4 7/16							7 Groove F = 5 1/8							8 Groove F = 5 13/16						
		Bush	Type	E	K	L	M	Wt.	Bush	Type	E	K	L	M	Wt.	Bush	Type	E	K	L	M	Wt.
4.4 †	2.70	SD	E1	3 1/4	0	1 13/16	5/8	8.3	—	—	—	—	—	—	—	—	—	—	—	—	—	—
4.65†	2.94	SD	E1	3 1/4	0	1 13/16	5/8	9.1	—	—	—	—	—	—	—	—	—	—	—	—	—	—
4.9 †	3.25	SD	A1	11/16	1 5/16	1 13/16	1 15/16	9.8	—	—	—	—	—	—	—	—	—	—	—	—	—	—
5.2 †	3.50	SD	A1	11/16	1 5/16	1 13/16	1 15/16	11.1	—	—	—	—	—	—	—	—	—	—	—	—	—	—
5.5 †	3.75	SD	A1	11/16	1 5/16	1 13/16	1 15/16	12.4	—	—	—	—	—	—	—	—	—	—	—	—	—	—
5.9 †	4.18	SK	A1	19/32	1 5/16	1 7/8	1 31/32	14.0	—	—	—	—	—	—	—	—	—	—	—	—	—	—
6.3 †	4.56	SK	A1	19/32	1 5/16	1 7/8	1 31/32	15.8	—	—	—	—	—	—	—	—	—	—	—	—	—	—
6.7 †	4.99	SF	A1	15/16	1 5/8	2	1 1/2	18.3	—	—	—	—	—	—	—	—	—	—	—	—	—	—
7.1	5.31	SF	A1	15/16	1 5/8	2	1 1/2	20.3	SF	A1	15/16	1 5/8	2	2 3/16	22.1	SF	A1	1 7/16	2 1/8	2	2 3/8	24.0
7.5	5.62	SF	A1	15/16	1 5/8	2	1 1/2	22.9	SF	A1	15/16	1 5/8	2	2 3/16	25.0	SF	A1	1 7/16	2 1/8	2	2 3/8	27.1
8.0	6.12	E	A1	1 3/32	2	2 5/8	23/32	30.1	E	A1	1 3/32	2	2 5/8	1 13/32	32.3	E	A1	1 19/32	2 1/2	2 5/8	1 19/32	34.6
8.5	6.62	E	A1	1 3/32	2	2 5/8	23/32	33.3	E	A1	1 3/32	2	2 5/8	1 13/32	35.7	E	A1	1 19/32	2 1/2	2 5/8	1 19/32	38.2
9.0	7.12	E	A1	1 3/32	2	2 5/8	23/32	36.7	E	A1	1 3/32	2	2 5/8	1 13/32	39.3	E	A1	1 19/32	2 1/2	2 5/8	1 19/32	41.9
9.25	7.44	E	A1	1 3/32	2	2 5/8	23/32	37.9	E	A1	1 3/32	2	2 5/8	1 13/32	40.4	F	A1	1 1/2	2 9/16	3 5/8	11/16	51.7
9.75	7.94	E	A1	1 3/32	2	2 5/8	23/32	41.5	E	A1	1 3/32	2	2 5/8	1 13/32	44.1	F	A1	1 1/2	2 9/16	3 5/8	11/16	57.0
10.3	8.50	E	A1	1 3/32	2	2 5/8	23/32	40.6	F	B1	1 1/2	2 9/16	3 5/8	0	60.5	F	A1	1 1/2	2 9/16	3 5/8	11/16	63.4
10.9	9.12	E	A1	1 3/32	2	2 5/8	23/32	43.1	F	B1	1 1/2	2 9/16	3 5/8	0	67.1	F	A1	1 1/2	2 9/16	3 5/8	11/16	70.2
11.3	9.38	E	A1	1 3/32	2	2 5/8	23/32	47.8	F	B1	1 1/2	2 9/16	3 5/8	0	73.3	F	A1	1 1/2	2 9/16	3 5/8	11/16	76.9
11.8	9.94	E	A2	1 3/32	2	2 5/8	23/32	50.4	F	B2	1 1/2	2 9/16	3 5/8	0	64.3	F	A2	1 1/2	2 9/16	3 5/8	11/16	67.9
12.5	10.62	F	B2	1	2 1/16	3 5/8	3/16	65.1	F	B2	1 1/2	2 9/16	3 5/8	0	69.0	F	A2	1 1/2	2 9/16	3 5/8	11/16	72.8
13.2	11.31	F	B2	1	2 1/16	3 5/8	3/16	69.6	F	B2	1 1/2	2 9/16	3 5/8	0	73.8	F	A2	1 1/2	2 9/16	3 5/8	11/16	77.9
14.0	12.12	F	B2	1	2 1/16	3 5/8	3/16	74.6	F	B2	1 1/2	2 9/16	3 5/8	0	79.1	F	A2	1 1/2	2 9/16	3 5/8	11/16	83.3
15.0	13.12	F	B2	1	2 1/16	3 5/8	3/16	72.1	F	B3	1 1/2	2 9/16	3 5/8	0	76.9	F	A3	1 1/2	2 9/16	3 5/8	11/16	81.5
16.0	14.12	F	B2	1	2 1/16	3 5/8	3/16	76.4	F	B3	1 1/2	2 9/16	3 5/8	0	82.5	F	A3	1 1/2	2 9/16	3 5/8	11/16	87.4
18.7	16.75	F	A3	1/4	1 5/16	3 5/8	9/16	93.3	F	A3	1/4	1 5/16	3 5/8	1 1/4	99.6	J	A3	5/16	1 9/16	4 1/2	1	122.2
21.2	19.25	F	A3	1/4	1 5/16	3 5/8	9/16	106.5	J	A3	1/16	1 5/16	4 1/2	9/16	131.2	J	A3	5/16	1 9/16	4 1/2	1	138.9
23.6	21.62	J	B3	1/16	1 5/16	4 1/2	1/8	133.4	J	A3	1/16	1 5/16	4 1/2	9/16	141.7	J	A3	5/16	1 9/16	4 1/2	1	154.6
28.0	26.00	J	B3	1/16	1 5/16	4 1/2	1/8	169.1	J	A3	1/16	1 5/16	4 1/2	9/16	181.0	J	A3	5/16	1 9/16	4 1/2	1	191.0
31.5	29.50	J	B3	1/16	1 5/16	4 1/2	1/8	198.1	J	A3	1/16	1 5/16	4 1/2	9/16	212.1	M	B3	15/32	1 15/16	6 3/4	1 13/32	295.7
37.5	35.25	J	B3	1/16	1 5/16	4 1/2	1/8	253.8	M	B3	15/32	1 5/16	6 3/4	2 3/32	349.6	M	B3	15/32	1 15/16	6 3/4	1 13/32	366.2
50.0	47.38	M	C3	31/32	1/2	6 3/4	1 11/32	472.1	M	C3	31/32	1/2	6 3/4	21/32	498.1	M	B3	15/32	1 15/16	6 3/4	1 13/32	553.1

O.D. ◇	I.D.	9 Groove F = 6 1/2							10 Groove F = 7 3/16						
		Bush	Type	E	K	L	M	Wt.	Bush	Type	E	K	L	M	Wt.
8.0	6.12	E	A1	1 19/32	2 1/2	2 5/8	2 9/32	36.9	E	A1	2 11/32	3 1/4	2 5/8	2 7/32	39.1
8.5	6.62	E	A1	1 19/32	2 1/2	2 5/8	2 9/32	40.6	E	A1	2 11/32	3 1/4	2 5/8	2 7/32	43.0
9.0	7.12	E	A1	1 19/32	2 1/2	2 5/8	2 9/32	44.5	F	A1	2 1/4	3 5/16	3 5/8	1 5/16	54.9
9.25	7.44	F	A1	1 1/2	2 9/16	3 5/8	1 3/8	54.2	F	A1	2 1/4	3 5/16	3 5/8	1 5/16	56.8
9.75	7.94	F	A1	1 1/2	2 9/16	3 5/8	1 3/8	59.7	F	A1	2 1/4	3 5/16	3 5/8	1 5/16	62.4
10.3	8.50	F	A1	1 1/2	2 9/16	3 5/8	1 3/8	66.3	F	A1	2 1/4	3 5/16	3 5/8	1 5/16	69.2
10.9	9.12	F	A1	1 1/2	2 9/16	3 5/8	1 3/8	73.3	F	A1	2 1/4	3 5/16	3 5/8	1 5/16	76.3
11.3	9.30	F	A1	1 1/2	2 9/16	3 5/8	1 3/8	80.5	F	A1	2 1/4	3 5/16	3 5/8	1 5/16	84.0
11.8	9.94	F	A2	1 1/2	2 9/16	3 5/8	1 3/8	71.4	F	A2	2 1/4	3 5/16	3 5/8	1 5/16	75.0
12.5	10.62	F	A2	1 1/2	2 9/16	3 5/8	1 3/8	76.8	J	A2	2 5/16	3 9/16	4 1/2	3/8	92.9
13.2	11.31	F	A2	1 1/2	2 9/16	3 5/8	1 3/8	83.9	J	A2	2 5/16	3 9/16	4 1/2	3/8	99.0
14.0	12.12	F	A2	1 1/2	2 9/16	3 5/8	1 3/8	90.2	J	A2	2 5/16	3 9/16	4 1/2	3/8	105.4
15.0	13.12	J	B2	2 5/16	3 9/16	4 1/2	5/16	109.5	J	A2	2 5/16	3 9/16	4 1/2	3/8	99.0
16.0	14.12	J	B3	2 5/16	3 9/16	4 1/2	5/16	109.0	J	A3	2 5/16	3 9/16	4 1/2	3/8	114.1
18.7	16.75	J	A3	5/16	1 9/16	4 1/2	1 11/16	128.6	J	A3	5/16	1 9/16	4 1/2	2 3/8	136.4
21.2	19.25	J	A3	5/16	1 9/16	4 1/2	1 11/16	146.0	J	A3	5/16	1 9/16	4 1/2	2 3/8	159.4
23.6	21.62	J	A3	5/16	1 9/16	4 1/2	1 11/16	165.1	M	B3	15/32	1 5/16	6 3/4	1/32	245.8
28.0	26.00	M	B3	15/32	1 15/16	6 3/4	23/32	273.7	M	B3	15/32	1 5/16	6 3/4	1/32	293.0
31.5	29.50	M	B3	15/32	1 15/16	6 3/4	23/32	316.0	M	B3	15/32	1 5/16	6 3/4	1/32	329.1
37.5	35.25	M	B3	15/32	1 15/16	6 3/4	23/32	398.5	M	B3	15/32	1 5/16	6 3/4	1/32	421.0
50.0	47.38	M	B3	15/32	1 15/16	6 3/4	23/32	580.1	M	B3	15/32	1 5/16	6 3/4	1/32	637.1

P.D. = O.D. minus .10 inches. † Recommended for use with Power-Wedge Cog-belt only.
◇ Weights for all bushed items are approximate and include the bushing.

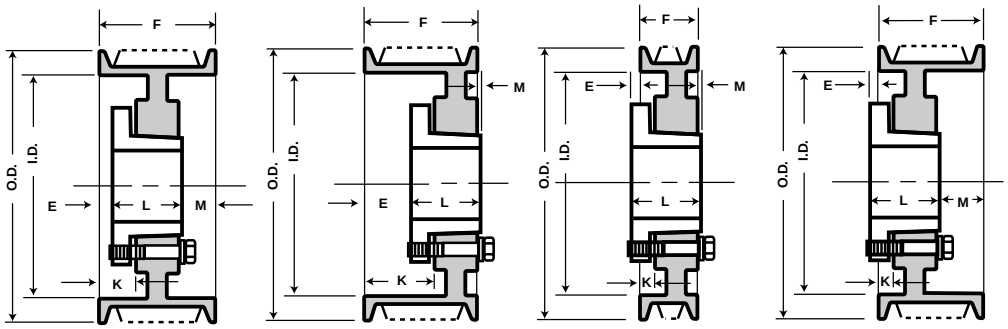

Type A **Type B** **Type C** **Type D**

CARLISLE POWER-WEDGE QD SHEAVES — STOCK SIZES

The sheaves listed below are all stock sizes. The dimensions given are with the bushings in place. When ordering specify the bushing, if required, and the bore size. The figure following the letter in the "Type" column indicates the sheave construction: 1 — Solid, 2 — Web, 3 — Arms.

8V Dimensions (inches)

O.D. ◇	I.D.	4 Groove F = 4 7/8							5 Groove F = 6							6 Groove F = 7 1/8						
		Bush	Type	E	K	L	M	Wt.	Bush	Type	E	K	L	M	Wt.	Bush	Type	E	K	L	M	Wt.
12.5	9.75	F	A1	1/8	1 3/16	3 5/8	1 1/8	85.5	F	A1	1 1/4	2 5/16	3 5/8	1 1/8	93.3	F	A1	1 1/4	2 5/16	3 5/8	2 1/4	100.9
13.2	10.44	F	A2	1/8	1 3/16	3 5/8	1 1/8	78.4	F	A2	1 1/4	2 5/16	3 5/8	1 1/8	88.2	F	A2	1 1/4	2 5/16	3 5/8	2 1/4	96.6
14.0	11.25	F	A2	1/8	1 3/16	3 5/8	1 1/8	84.5	F	A2	1 1/4	2 5/16	3 5/8	1 1/8	95.2	F	A2	1 1/4	2 5/16	3 5/8	2 1/4	104.1
15.0	12.25	F	A2	1/8	1 3/16	3 5/8	1 1/8	92.6	F	A2	1 1/4	2 5/16	3 5/8	1 1/8	104.7	J	A2	1 5/16	2 9/16	4 1/2	1 5/16	127.2
16.0	13.25	F	A2	1/8	1 3/16	3 5/8	1 1/8	98.8	F	A2	1 1/4	2 5/16	3 5/8	1 1/8	112.1	J	A2	1 5/16	2 9/16	4 1/2	1 5/16	143.5
17.0	14.25	F	A2	1/8	1 3/16	3 5/8	1 1/8	109.4	J	A2	3/4	2	4 1/2	3/4	141.0	J	A2	1 5/16	2 9/16	4 1/2	1 5/16	153.0
18.0	15.25	F	A2	1/8	1 3/16	3 5/8	1 1/8	118.1	J	A2	3/4	2	4 1/2	3/4	147.5	J	A2	1 5/16	2 9/16	4 1/2	1 5/16	169.0
19.0	16.25	F	A2	1/8	1 3/16	3 5/8	1 1/8	127.1	J	A2	3/4	2	4 1/2	3/4	158.2	J	A2	1 5/16	2 9/16	4 1/2	1 5/16	182.0
20.0	17.25	J	A3	3/16	1 7/16	4 1/2	3/16	128.3	J	A2	3/4	2	4 1/2	3/4	167.5	M	B2	1 15/32	2 15/16	6 3/4	1 15/32	242.8
21.2	18.44	J	A3	3/16	1 7/16	4 1/2	3/16	142.8	J	A2	3/4	2	4 1/2	3/4	183.8	M	B2	1 15/32	2 15/16	6 3/4	1 15/32	263.3
22.4	19.62	J	A3	3/16	1 7/16	4 1/2	3/16	154.2	M	B2	15/32	1 15/16	6 3/4	1 7/32	276.3	M	B2	1 15/32	2 15/16	6 3/4	1 15/32	280.9
24.8	21.90	M	C3	21/32	1 3/16	6 3/4	1 7/32	247.5	M	B3	15/32	1 15/16	6 3/4	1 7/32	266.5	M	B3	15/32	1 15/16	6 3/4	15/32	285.5
30.0	27.12	M	C3	21/32	1 3/16	6 3/4	1 7/32	286.7	M	B3	15/32	1 15/16	6 3/4	1 7/32	327.6	M	B3	15/32	1 15/16	6 3/4	15/32	354.4
35.5	32.50	M	C3	21/32	1 3/16	6 3/4	1 7/32	329.3	M	B3	15/32	1 15/16	6 3/4	1 7/32	404.1	N	C3	9/16	1 1/8	8 1/8	9/16	537.0
40.0	37.00	M	C3	21/32	1 3/16	6 3/4	1 7/32	407.6	M	B3	15/32	1 15/16	6 3/4	1 7/32	441.0	N	C3	9/16	1 1/8	8 1/8	9/16	549.9
44.5	41.60	M	C3	21/32	1 3/16	6 3/4	1 7/32	461.0	N	C3	3/4	15/16	8 1/8	1 3/8	580.5	N	C3	9/16	1 1/8	8 1/8	9/16	619.5
53.0	49.88	M	C3	21/32	1 3/16	6 3/4	1 7/32	557.0	N	C3	3/4	15/16	8 1/8	1 3/8	688.0	N	C3	9/16	1 1/8	8 1/8	9/16	768.0
63.0	59.80	—	—	—	—	—	—	—	—	—	—	—	—	—	—	P	B3	1/8	2	9 3/8	1/8	1027.0

O.D. ◇	I.D.	8 Groove F = 9 3/8							10 Groove F = 11 5/8							12 Groove F = 13 7/8						
		Bush	Type	E	K	L	M	Wt.	Bush	Type	E	K	L	M	Wt.	Bush	Type	E	K	L	M	Wt.
12.5	9.75	J	A1	2 5/16	3 9/16	4 1/2	2 9/16	129.1	J	A1	2 5/16	3 9/16	4 1/4	4 13/16	148.9	M	A1	2 15/32	3 15/16	6 3/4	4 21/32	198.0
13.2	10.44	J	A1	2 5/16	3 9/16	4 1/2	2 9/16	144.5	J	A2	2 5/16	3 9/16	4 1/4	4 13/16	148.6	M	A1	2 15/32	3 15/16	6 3/4	4 21/32	225.0
14.0	11.25	J	A2	2 5/16	3 9/16	4 1/2	2 9/16	136.6	J	A2	2 5/16	3 9/16	4 1/4	4 13/16	161.0	M	A1	2 15/32	3 15/16	6 3/4	4 21/32	245.8
15.0	12.25	J	A2	2 5/16	3 9/16	4 1/2	2 9/16	146.5	M	A1	2 15/32	3 15/16	6 3/4	2 13/32	264.0	M	A1	2 15/32	3 15/16	6 3/4	4 21/32	285.0
16.0	13.25	J	A2	2 5/16	3 9/16	4 1/2	2 9/16	164.5	M	A2	2 15/32	3 15/16	6 3/4	2 13/32	296.7	M	A1	2 15/32	3 15/16	6 3/4	4 21/32	324.0
17.0	14.25	M	A2	2 15/32	3 15/16	6 3/4	5/32	244.1	M	A2	2 15/32	3 15/16	6 3/4	2 13/32	269.1	M	A2	2 15/32	3 15/16	6 3/4	4 21/32	324.0
18.0	15.25	M	A2	2 15/32	3 15/16	6 3/4	5/32	257.0	M	A2	2 15/32	3 15/16	6 3/4	2 13/32	282.8	M	A2	2 15/32	3 15/16	6 3/4	4 21/32	338.0
19.0	16.25	M	A2	2 15/32	3 15/16	6 3/4	5/32	280.0	M	A2	2 15/32	3 15/16	6 3/4	2 13/32	300.8	N	A2	9/16	2 1/4	8 1/8	5 3/16	412.0
20.0	17.12	M	A2	2 15/32	3 15/16	6 3/4	5/32	292.6	M	A2	2 15/32	3 15/16	6 3/4	2 13/32	318.6	N	A2	9/16	2 1/4	8 1/8	5 3/16	411.0
21.2	18.31	M	A2	2 15/32	3 15/16	6 3/4	5/32	314.0	M	A2	2 15/32	3 15/16	6 3/4	2 13/32	340.7	N	A2	9/16	2 1/4	8 1/8	5 3/16	421.0
22.4	19.50	M	A2	2 15/32	3 15/16	6 3/4	5/32	345.7	N	A2	9/16	2 1/4	8 1/8	2 15/16	411.1	N	A2	9/16	2 1/4	8 1/8	5 3/16	478.0
24.8	21.90	N	A3	9/16	2 1/4	8 1/8	11/16	423.7	N	A2	9/16	2 1/4	8 1/8	2 15/16	463.0	N	A2	9/16	2 1/4	8 1/8	5 3/16	516.5
30.0	27.12	N	A3	9/16	2 1/4	8 1/8	11/16	468.9	N	A3	9/16	2 1/4	8 1/8	2 15/16	557.5	P	A3	3/4	2 5/8	9 3/8	3 3/4	672.1
35.5	32.50	N	A3	9/16	2 1/4	8 1/8	11/16	588.0	P	A3	3/4	2 5/8	9 3/8	1 1/2	706.0	P	A3	3/4	2 5/8	9 3/8	3 3/4	837.0
40.0	37.00	N	A3	9/16	2 1/4	8 1/8	11/16	663.0	P	A3	3/4	2 5/8	9 3/8	1 1/2	817.9	P	A3	3/4	2 5/8	9 3/8	3 3/4	909.5
44.5	41.60	P	B3	3/4	2 5/8	9 3/8	3/4	860.0	P	A3	3/4	2 5/8	9 3/8	1 1/2	927.0	P	A3	3/4	2 5/8	9 3/8	3 3/4	1097.0
53.0	49.88	P	B3	3/4	2 5/8	9 3/8	3/4	992.0	P	A3	3/4	2 5/8	9 3/8	1 1/2	1137.0	W	A3	5/8	2 7/8	11 3/8	1 7/8	1482.0
63.0	59.80	P	B3	3/4	2 5/8	9 3/8	3/4	1262.0	W	B3	3/8	2 5/8	11 3/8	1/8	1652.0	W	A3	5/8	2 7/8	11 3/8	1 7/8	1777.0

◇ P.D. = O.D. minus .20 inches.
Weights for all bushed items are approximate and include the bushing.
All dimensions are for reference purposes only and are subject to change without notice.

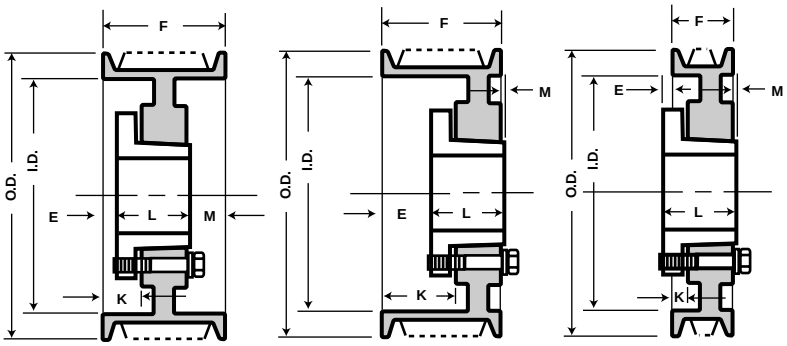

Type A Type B Type C

QD MULTIPLE SHEAVES
Power-Wedge QD Sheaves

Cross Section	Standard Groove Effective Diameter	Groove Angle ±0.25 Degrees	Standard Groove Dimensions for Power-Wedge Sheaves							Design Factors	
			b_g ±0.05	b_e Ref.	h_g Min.	R_B Min.	d_B ±0.0005	S_g ±0.015	S_e	Minimum Recommended Effective Diameter	$2a_p$ $2h_e$
3V 3VX	Up Through 3.49	36	0.350	0.350	0.340	0.181	0.3438	0.406	0.344 +0.094 -0.031	3V 2.65 3VX 2.20	0
	Over 3.49 To And Including 6.00	38				0.183					
	Over 6.00 To And Including 12.00	40				0.186					
	Over 12.00	42				0.188					
5V 5VX	Up Through 9.99	38	0.600	0.600	0.590	0.329	0.5938	0.688	0.500 +0.125 -0.047	5V 7.10 5VX 4.40	0
	Over 9.99 To And Including 16.00	40				0.332					
	Over 16.00	42				0.336					
8V	Up Through 15.99	38	1.000	1.000	1.990	0.575	1.000	1.125	0.750 +0.250 -0.062	12.50	0
	Over 15.99 To And Including 22.40	40				0.580					
	Over 22.40	42				0.585					

Cross Section	Deep Groove Effective Diameter	Groove Angle ±0.25 Degrees	Deep Groove Dimensions for Power-Wedge Sheaves							Design Factors	
			b_g ±0.05	b_e Ref.	h_g Min.	R_B Min.	d_B ±0.0005	S_g ±0.015	S_e	Minimum Recommended Effective Diameter	$2a_p$ $2h_e$
3V 3VX	Up Through 3.49	36	0.421	0.350	0.449	0.070	0.3438	0.500	0.375 +0.094 -0.031	3V 2.65 3VX 2.20	0.218
	Over 3.49 To And Including 6.00	38	0.425			0.073					
	Over 6.00 To And Including 12.00	40	0.429			0.076					
	Over 12.00	42	0.434			0.078					
5V 5VX	Up Through 9.99	38	0.710	0.600	0.750	0.168	0.5938	0.812	0.562 +0.125 -0.047	5V 7.10 5VX 4.40	0.320
	Over 9.99 To And Including 16.00	40	0.716			0.172					
	Over 16.00	42	0.723			0.175					
8V	Up Through 15.99	38	1.180	1.000	1.262	0.312	1.0000	1.312	0.844 +0.250	12.5	0.524
	Over 15.99 To And Including 22.40	40	1.191			0.316					

Summation of the deviations from "S_g" for all grooves in any one sheave shall not exceed ± 0.031 inch. The variations in effective diameter between the grooves in any one sheave must be within the following limits:

Up through 19.9 inches effective diameter and up through 6 grooves-
0.010 inches (Add 0.0005 inches for each additional groove)

20.0 inches and over on effective diameter and up through 10 grooves-
0.015 inches (Add 0.0005 inches for each additional groove)

This variation can be easily obtained by measuring the distance across two measuring balls or rods placed in the grooves diametrically opposite each other. Comparing this "diameter over balls or rods" measurement between grooves will give the variation in effective diameter.

Deep groove sheaves are intended for drives with belt offset such as quarter turn or vertical shaft drives. (See Power Transmission Belt Technical Information Bulletin IP-3-10).

Joined belts will not operate in deep groove sheaves.

QD MULTIPLE SHEAVES
Power-Wedge QD Sheaves

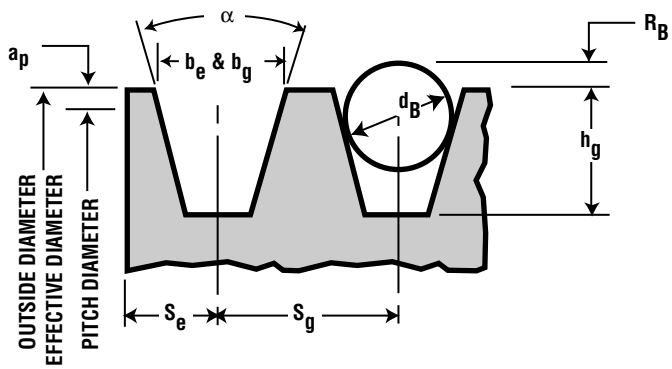

Standard Groove Dimensions

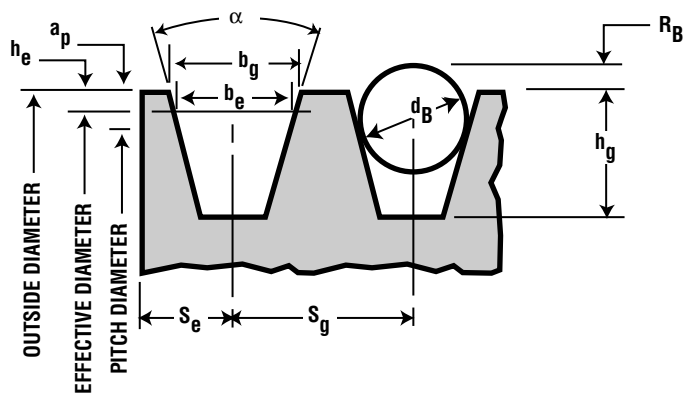

Deep Groove Dimensions

OTHER SHEAVE TOLERANCES

Outside Diameter	**Radial Runout****	**Axial Runout****	**Face Width of Standard and Deep Groove Sheaves**
Up through 8.0 inches ± 0.020 inches For each additional inch of outside diameter add ± 0.005 inches	Up thru 10.0 inches Outside Diameter 0.010 inches. For each additional inch of outside diameter add 0.0005 inches	Up thru 5.0 inches Outside Diameter 0.0005 inches For each additional inch of outside diameter add 0.0001 inches	Face Width = s_g (n_g -1) +2s_g Where: N_g = Number of Grooves

** Total Indicator reading

Machined Surface Area	**Maximum Surface Roughness height, R_B** (Arithmetic Avg.) (Micro Inches)
Sheave Groove Sidewalls	125
Sheave O.D.'s and Rim Edges	250
Rim I.D.'s Hub Ends. Hub O.D.'s	As Cast
Straight Bores and Taper Bores	125.00

CARLISLE CLASSICAL QD SHEAVES

Stock Conventional “A” Sheaves

The sheaves listed below are all stock sizes. The dimensions given are with the bushings in place. When ordering specify the bushing, if required, and the bore size. The figure following the letter in the “Type” column indicates the sheave construction: 1—Solid, 2—Web, 3—Arms.

“A” Dimensions (inches)

Datum Dia.	O.D. ◇	I.D.	2 Groove F = 1⅜							3 Groove F = 2						
			E*	Type	Bush	K	L	M	Wt.	E*	Type	Bush	K	L	M	Wt.
3.0	3.25	2.00	1	E1	SH	5/16	1¼	⅞	2.5	1⅝	E1	SH	5/16	1¼	⅞	5.1
3.2	3.45	2.20	1	E1	SH	5/16	1¼	⅞	2.7	1⅝	E1	SH	5/16	1¼	⅞	5.7
3.4	3.65	2.40	11/16	E1	SH	0	1¼	9/16	2.5	—	—	—	—	—	—	—
3.6	3.85	2.60	11/16	E1	SH	0	1¼	9/16	2.8	1 5/16	E1	SH	0	1¼	9/16	6.5
3.8	4.05	2.80	1/16	D1	SH	½	1¼	3/16	3.0	⅛	A1	SH	11/16	1¼	⅝	6.9
4.0	4.25	3.00	1/16	D1	SH	½	1¼	3/16	3.3	⅛	A1	SH	11/16	1¼	⅝	7.4
4.2	4.45	3.25	⅛	D1	SDS	½	1 5/16	3/16	3.7	1/16	A1	SD	11/16	1 13/16	⅛	8.0
4.6	4.85	3.60	⅛	D1	SDS	½	1 5/16	3/16	4.3	1/16	A1	SD	11/16	1 13/16	⅛	9.1
4.8	5.05	3.80	⅛	D1	SDS	½	1 5/16	3/16	4.6	1/16	A1	SD	11/16	1 13/16	⅛	10.2
5.0	5.25	4.00	⅛	D1	SDS	½	1 5/16	3/16	5.0	1/16	A1	SD	11/16	1 13/16	⅛	10.5
5.2	5.45	4.20	⅛	D1	SDS	½	1 5/16	3/16	5.3	1/16	A2	SD	11/16	1 13/16	⅛	11.3
5.6	5.85	4.60	⅛	D2	SDS	½	1 5/16	3/16	5.5	1/16	A2	SD	11/16	1 13/16	⅛	12.8
6.0	6.25	5.00	⅛	D2	SDS	½	1 5/16	3/16	6.0	1/16	A2	SD	11/16	1 13/16	⅛	13.4
6.4	6.65	5.40	⅛	D2	SDS	½	1 5/16	3/16	6.6	1/16	A2	SD	11/16	1 13/16	⅛	13.4
7.0	7.25	6.00	⅛	D2	SDS	½	1 5/16	3/16	7.2	1/32	D3	SK	11/16	1⅞	5/32	16.3
8.2	8.45	7.18	⅛	D2	SDS	½	1 5/16	3/16	9.0	1/32	D3	SK	11/16	1⅞	5/32	16.6
9.0	9.25	8.00	⅛	D3	SDS	½	1 5/16	3/16	8.5	1/32	D3	SK	11/16	1⅞	5/32	19.4
10.6	10.85	9.59	¼	D3	SDS	⅜	1 5/16	5/16	10.0	5/32	D3	SK	9/16	1⅞	9/32	24.6
12.0	12.25	11.00	¼	D3	SDS	⅜	1 5/16	5/16	11.0	5/32	D3	SK	9/16	1⅞	9/32	27.7
15.0	15.25	14.00	15/32	C3	SK	¼	1⅞	1/32	16.2	5/32	D3	SK	9/16	1⅞	9/32	36.0
18.0	18.25	17.00	15/32	C3	SK	¼	1⅞	1/32	20.3	5/32	D3	SK	9/16	1⅞	9/32	45.0

* “E” Dimension varies according to shaft tolerance.
Weights for all bushed items are approximate and include the bushing.
◇ P.D. = same as O.D.
All published dimensions are for reference only and are subject to change without notice.

CARLISLE CLASSICAL QD SHEAVES
Stock Conventional “A - B” Sheaves

The sheaves listed below are all stock sizes. The dimensions given are with the bushings in place. When ordering specify the bushing, if required, and the bore size. The figure following the letter in the “Type” column indicates the sheave construction: 1—Solid, 2—Web, 3—Arms.

Regardless of which belt section is being used, “A” or “B”, specify the sheave part number by the “B” datum diameter. Example: 5.4 x 2 B and, if required, the bushing and bore size.

“A-B” Dimensions (Inches)

Datum Dia.		O.D. ◇	I.D.	1 Groove							2 Groove						
				F = ⅞ & 1							F = 1¾						
A belts	B belts			E*	Type	Bush.	K	L	M	Wt.	E*	Type	Bush.	K	L	M	Wt.
3.0	3.4	3.75	2.12	½	D1	SH	1/16	1¼	⅛	1.8	1 1/16	E1	SH	0	1¼	9/16	2.9
3.2	3.6	3.95	2.25	½	D1	SH	1/16	1¼	⅛	2.1	⅞	E1	SH	3/16	1¼	⅜	3.2
3.4	3.8	4.15	2.44	½	D1	SH	1/16	1¼	⅛	2.3	⅞	E1	SH	3/16	1¼	⅜	3.6
3.6	4.0	4.35	2.75	¼	C1	SH	5/16	1¼	⅛	2.8	⅛	A1	SH	11/16	1¼	⅜	3.8
3.8	4.2	4.55	2.94	¼	C1	SH	5/16	1¼	⅛	3.0	⅛	A1	SH	11/16	1¼	⅜	4.3
4.0	4.4	4.75	3.12	¼	C1	SH	5/16	1¼	⅛	3.2	⅛	A1	SH	11/16	1¼	⅜	4.7
4.2	4.6	4.95	3.38	5/16	C1	SDS	5/16	1 5/16	⅛	3.5	1/16	A1	SDS	11/16	1 5/16	⅜	4.8
4.4	4.8	5.15	3.50	5/16	C1	SDS	5/16	1 5/16	⅛	3.8	1/16	A1	SDS	11/16	1 5/16	⅜	5.5
4.6	5.0	5.35	3.62	5/16	C1	SDS	5/16	1 5/16	⅛	4.1	1/16	A1	SDS	11/16	1 5/16	⅜	5.6
4.8	5.2	5.55	3.81	5/16	C1	SDS	5/16	1 5/16	⅛	4.3	1/16	A1	SDS	11/16	1 5/16	⅜	6.2
5.0	5.4	5.75	4.00	5/16	C1	SDS	5/16	1 5/16	⅛	4.6	1/16	A1	SDS	11/16	1 5/16	⅜	6.5
5.2	5.6	5.95	4.31	5/16	C1	SDS	5/16	1 5/16	⅛	4.6	1/16	A1	SDS**	11/16	1 5/16	⅜	7.4
5.4	5.8	6.15	4.44	5/16	C1	SDS	5/16	1 5/16	⅛	4.9	1/16	A1	SDS	11/16	1 5/16	⅜	7.4
5.6	6.0	6.35	4.62	5/16	C2	SDS	5/16	1 5/16	⅛	5.1	1/16	A1	SDS**	11/16	1 5/16	⅜	8.1
5.8	6.2	6.55	4.88	5/16	C2	SDS	5/16	1 5/16	⅛	5.3	1/16	A1	SDS	11/16	1 5/16	⅜	8.5
6.0	6.4	6.75	5.00	5/16	C2	SDS	5/16	1 5/16	⅛	5.6	1/16	A2	SDS	11/16	1 5/16	⅜	9.0
6.2	6.6	6.95	5.25	5/16	C2	SDS	5/16	1 5/16	0	6.3	1/16	A1	SDS	11/16	1 5/16	⅜	12.7
6.4	6.8	7.15	5.44	5/16	C2	SDS	5/16	1 5/16	0	6.6	1/16	A2	SDS**	11/16	1 5/16	⅜	9.5
6.6	7.0	7.35	5.50	½	D2	SDS	⅛	1 5/16	3/16	7.5	9/32	D1	SK**	7/16	1⅞	5/32	13.3
7.0	7.4	7.75	6.00	½	D2	SDS	⅛	1 5/16	3/16	7.9	9/32	D2	SK	7/16	1⅞	5/32	14.7
7.6	8.0	8.35	6.63	½	D2	SDS	⅛	1 5/16	3/16	8.8	9/32	D2	SK**	7/16	1⅞	5/32	13.8
8.2	8.6	8.95	7.25	½	D2	SDS	⅛	1 5/16	3/16	9.6	9/32	D2	SK**	7/16	1⅞	5/32	15.3
9.0	9.4	9.75	8.00	½	D3	SDS	⅛	1 5/16	3/16	8.4	9/32	D3	SK**	7/16	1⅞	5/32	14.5
10.6	11.0	11.35	9.62	½	D3	SDS	⅛	1 5/16	3/16	11.7	9/32	D3	SK**	7/16	1⅞	5/32	17.0
12.0	12.4	12.75	11.06	½	D3	SDS	⅛	1 5/16	3/16	12.2	9/32	D3	SK	7/16	1⅞	5/32	21.0
13.2	13.6	13.95	12.25	½	D3	SDS	⅛	1 5/16	3/16	14.0	9/32	D3	SK	7/16	1⅞	5/32	23.1
15.0	15.4	15.75	14.00	19/32	C3	SK	⅛	1⅞	9/32	18.7	9/32	D3	SK**	7/16	1⅞	5/32	25.0
15.6	16.0	16.35	14.62	19/32	C3	SK	⅛	1⅞	9/32	18.4	9/32	D3	SK	7/16	1⅞	5/32	25.5
18.0	18.4	18.75	17.00	19/32	C3	SK	⅛	1⅞	9/32	23.7	9/32	D3	SK	7/16	1⅞	5/32	29.6
19.6	20.0	20.35	18.50	19/32	C3	SK	⅛	1⅞	9/32	30.7	5/16	D3	SF	⅜	2	1/16	43.5
24.6	25.0	25.35	23.38	—	—	—	—	—	—	—	5/16	D3	SF	⅜	2	1/16	50.4
29.6	30.0	30.35	28.50	—	—	—	—	—	—	—	5/16	D3	SF	⅜	2	1/16	74.2
37.6	38.0	38.35	36.38	—	—	—	—	—	—	—	5/16	D3	SF	⅜	2	1/16	97.9

* “E” Dimension varies according to shaft tolerance.
** Also available from stock made for the SF Bushing to accomodate larger bores.
All published dimensions are for reference only and are subject to change without notice.
Weights for all bushed items are approximate and include the bushing.
◇ P.D. for “A” Belts = O.D. - .37
P.D. for “B” Belts = O.D. + .01

CARLISLE CLASSICAL QD SHEAVES
Stock Conventional “A - B” Sheaves

“A-B” Dimensions (Inches)

Datum Dia.		O.D. ◇	I.D.	3 Groove							4 Groove						
				F = 2½							F = 3¼						
A belts	B belts			E*	Type	Bush.	K	L	M	Wt.	E*	Type	Bush.	K	L	M	Wt.
3.0	3.4	3.75	2.12	1 13/16	E1	SH	0	1¼	9/16	3.7	2⅜	E1	SD	7/16	1 13/16	15/16	5.6
3.2	3.6	3.95	2.25	1⅝	E1	SH	3/16	1¼	⅜	4.1	2⅜	E1	SD	7/16	1 13/16	15/16	6.2
3.4	3.8	4.15	2.44	1⅝	E1	SH	3/16	1¼	⅜	4.5	2⅜	E1	SD	5/16	1 13/16	15/16	6.2
3.6	4.0	4.35	2.75	½	A1	SH	1 1/16	1¼	¾	4.7	2 1/16	E1	SD	0	1 13/16	⅝	6.5
3.8	4.2	4.55	2.88	½	A1	SH	1 1/16	1¼	¾	5.3	2 1/16	E1	SD	0	1 13/16	⅝	6.9
4.0	4.4	4.75	3.12	½	A1	SH	1 1/16	1¼	¾	5.6	2 1/16	E1	SD	0	1 13/16	⅝	7.4
4.2	4.6	4.95	3.38	7/16	A1	SD	1 1/16	1 13/16	¼	6.8	11/16	A1	SD	1 5/16	1 13/16	¾	8.0
4.4	4.8	5.15	3.50	7/16	A1	SD	1 1/16	1 13/16	¼	7.5	11/16	A1	SD	1 5/16	1 13/16	¾	8.8
4.6	5.0	5.35	3.62	7/16	A1	SD	1 1/16	1 13/16	¼	8.1	11/16	A1	SD	1 5/16	1 13/16	¾	9.1
4.8	5.2	5.55	3.81	7/16	A1	SD	1 1/16	1 13/16	¼	8.8	11/16	A1	SD	1 5/16	1 13/16	¾	10.2
5.0	5.4	5.75	4.00	7/16	A1	SD	1 1/16	1 13/16	¼	9.3	11/16	A1	SD	1 5/16	1 13/16	¾	10.5
5.2	5.6	5.95	4.31	7/16	A1	SD*	1 1/16	1 13/16	¼	10.0	11/16	A1	SD	1 5/16	1 13/16	¾	11.3
5.4	5.8	6.15	4.44	7/16	A1	SD	1 1/16	1 13/16	¼	10.7	11/16	A1	SD	1 5/16	1 13/16	¾	12.1
5.6	6.0	6.35	4.62	7/16	A2	SD*	1 1/16	1 13/16	¼	11.2	11/16	A1	SD	1 5/16	1 13/16	¾	12.8
5.8	6.2	6.55	4.82	7/16	A1	SD	1 1/16	1 13/16	¼	12.6	11/16	A1	SD	1 5/16	1 13/16	¾	14.4
6.0	6.4	6.75	5.00	7/16	A1	SD	1 1/16	1 13/16	¼	13.0	11/16	A1	SD	1 5/16	1 13/16	¾	15.1
6.2	6.6	6.95	5.25	7/16	A1	SD	1 1/16	1 13/16	¼	10.5	11/16	A1	SD	1 5/16	1 13/16	¾	15.3
6.4	6.8	7.15	5.44	7/16	A2	SK**	1 1/16	1 13/16	¼	11.5	11/16	A1	SD	1 5/16	1 13/16	¾	16.8
6.6	7.0	7.35	5.50	1/32	D2	SK**	11/16	1⅞	21/32	15.2	9/32	A2	SK	1	1⅞	1 3/32	17.2
7.0	7.4	7.75	6.06	1/32	D2	SK	11/16	1⅞	21/32	16.9	9/32	A2	SK	1	1⅞	1 3/32	16.2
7.6	8.0	8.35	6.63	1/32	D2	SK**	11/16	1⅞	21/32	15.8	9/32	A2	SK	1	1⅞	1 3/32	18.1
8.2	8.6	8.95	7.25	1/32	D2	SK**	11/16	1⅞	21/32	17.6	9/32	A2	SK	1	1⅞	1 3/32	22.0
9.0	9.4	9.75	8.00	1/32	D3	SK**	11/16	1⅞	21/32	20.7	9/32	A2	SK	1	1⅞	1 3/32	23.9
10.6	11.0	11.35	9.62	1/32	D3	SK**	11/16	1⅞	21/32	19.6	9/32	A3	SK	1	1⅞	1 3/32	26.4
12.0	12.4	12.75	11.06	1/32	D3	SK	11/16	1⅞	21/32	22.5	9/32	A3	SK	1	1⅞	1 3/32	28.4
13.2	13.6	13.95	12.25	1/32	D3	SK	11/16	1⅞	21/32	26.4	9/32	A3	SK	1	1⅞	1 3/32	29.9
15.0	15.4	15.75	14.00	1/32	D3	SK*	11/16	1⅞	21/32	30.4	5/16	A3	SF	1	2	15/16	40.3
15.6	16.0	16.35	14.62	1/32	D3	SK	11/16	1⅞	21/32	32.7	5/16	A3	SF	1	2	15/16	38.7
18.0	18.4	18.75	17.00	1/32	D3	SK	11/16	1⅞	21/32	35.6	5/16	A3	SF	1	2	15/16	44.9
19.6	20.0	20.35	18.50	1/16	A3	SF	⅝	2	9/16	45.7	5/16	A3	SF	1	2	15/16	56.6
24.6	25.0	25.35	23.38	1/16	A3	SF	⅝	2	9/16	65.8	3/32	A3	E	1	2⅝	17/32	83.2
29.6	30.0	30.35	28.50	1/16	A3	SF	⅝	2	9/16	90.4	3/32	A3	E	1	2⅝	17/32	110.1
37.6	38.0	38.35	36.38	9/32	D3	E	⅝	2⅝	5/32	143.3	3/32	A3	E	1	2⅝	17/32	158.0

* “E” Dimension varies according to shaft tolerance.
** Also available from stock made for the SF Bushing to accomodate larger bores.
All published dimensions are for reference only and are subject to change without notice.
Weights for all bushed items are approximate and include the bushing.
◇ P.D. for “A” Belts = O.D. - .37
P.D. for “B” Belts = O.D. + .01

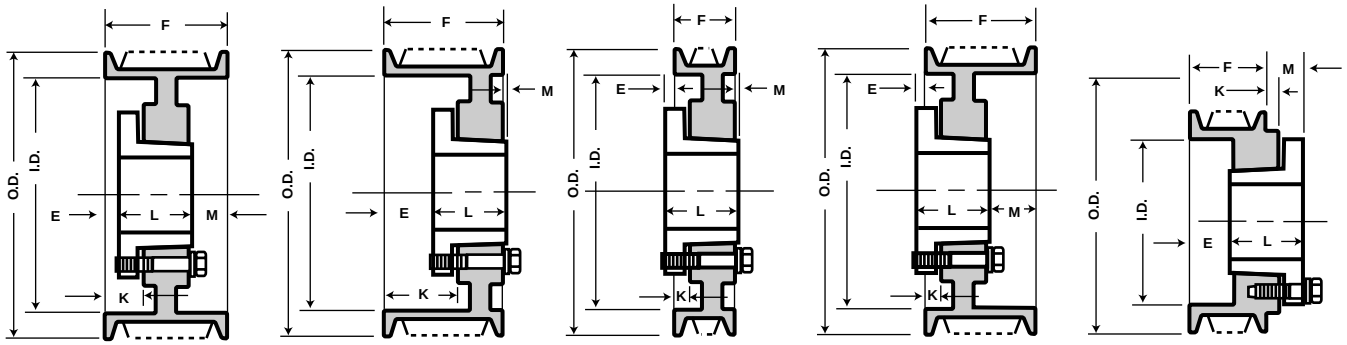

Type A Type B Type C Type D Type E

CARLISLE CLASSICAL QD SHEAVES
Stock Conventional “A - B” Sheaves

The sheaves listed below are all stock sizes. The dimensions given are with the bushings in place. When ordering specify the bushing, if required, and the bore size. The figure following the letter in the “Type” column indicates the sheave construction: 1—Solid, 2—Web, 3—Arms.

Regardless of which belt section is being used, “A” or “B”, specify the sheave part number by the “B” datum diameter. Example: 5.4 x 2 B and, if required, the bushing and bore size.

“A-B” Dimensions (Inches)

Datum Dia.		O.D. ◇	I.D.	5 Groove							6 Groove						
				F = 4							F = 4¾						
A belts	B belts			E*	Type	Bush.	K	L	M	Wt.	E*	Type	Bush.	K	L	M	Wt.
3.0	3.4	3.75	2.12	3⅛	E1	SD	5/16	1 13/16	15/16	6.5	3⅞	E1	SD	5/16	1 13/16	15/16	7.2
3.2	3.6	3.95	2.25	3⅛	E1	SD	5/16	1 13/16	15/16	7.1	3⅞	E1	SD	5/16	1 13/16	15/16	8.0
3.4	3.8	4.15	2.44	3⅛	E1	SD	5/16	1 13/16	15/16	7.2	3⅞	E1	SD	5/16	1 13/16	15/16	8.1
3.6	4.0	4.35	2.62	2 13/16	E1	SD	0	1 13/16	15/16	7.5	3 9/16	E1	SD	0	1 13/16	⅝	8.5
3.8	4.2	4.55	2.88	2 13/16	E1	SD	0	1 13/16	⅝	7.9	3 9/16	E1	SD	0	1 13/16	⅝	9.0
4.0	4.4	4.75	3.12	2 13/16	E1	SD	0	1 13/16	⅝	8.4	3 9/16	E1	SD	0	1 13/16	⅝	9.5
4.2	4.6	4.95	3.31	11/16	A1	SD	1 5/16	1 13/16	1½	9.1	11/16	A1	SD	1 5/16	1 13/16	2¼	10.2
4.4	4.8	5.15	3.44	11/16	A1	SD	1 5/16	1 13/16	1½	10.1	11/16	A1	SD	1 5/16	1 13/16	2¼	11.0
4.6	5.0	5.35	3.62	11/16	A1	SD	1 5/16	1 13/16	1½	10.8	11/16	A1	SD	1 5/16	1 13/16	2¼	11.8
4.8	5.2	5.55	3.81	11/16	A1	SD	1 5/16	1 13/16	1½	11.6	11/16	A1	SD	1 5/16	1 13/16	2¼	13.0
5.0	5.4	5.75	4.12	19/32	A1	SK	1 5/16	1⅞	1 17/32	12.0	19/32	A1	SK	1 5/16	1⅞	2 9/32	13.3
5.2	5.6	5.95	4.30	19/32	A1	SK	1 5/16	1⅞	1 17/32	12.9	19/32	A1	SK	1 5/16	1⅞	2 9/32	14.6
5.4	5.8	6.15	4.48	19/32	A1	SK	1 5/16	1⅞	1 17/32	13.7	19/32	A1	SK	1 5/16	1⅞	2 9/32	15.5
5.6	6.0	6.35	4.68	19/32	A1	SK	1 5/16	1⅞	1 17/32	14.5	19/32	A1	SK	1 5/16	1⅞	2 9/32	16.5
5.8	6.2	6.55	4.82	19/32	A1	SK	1 5/16	1⅞	1 17/32	15.7	19/32	A1	SK	1 5/16	1⅞	2 9/32	17.4
6.0	6.4	6.75	5.06	19/32	A1	SK	1 5/16	1⅞	1 17/32	16.3	19/32	A1	SK	1 5/16	1⅞	2 9/32	18.0
6.2	6.6	6.95	5.29	19/32	A1	SK	1 5/16	1⅞	1 17/32	17.0	19/32	A1	SK	1 5/16	1⅞	2 9/32	18.7
6.4	6.8	7.15	5.44	19/32	A1	SK	1 5/16	1⅞	1 17/32	18.2	19/32	A1	SK	1 5/16	1⅞	2 9/32	20.1
6.6	7.0	7.35	5.63	⅝	A1	SF	1 5/16	2	1⅜	19.7	1	A1	SF	1 11/16	2	1¾	21.7
7.0	7.4	7.75	6.06	⅝	A1	SF	1 5/16	2	1⅜	21.5	1	A1	SF	1 11/16	2	1¾	23.6
7.6	8.0	8.35	6.63	⅝	A1	SF	1 5/16	2	1⅜	22.3	1	A1	SF	1 11/16	2	1¾	27.1
8.2	8.6	8.95	7.31	⅝	A2	SF	1 5/16	2	1⅜	20.8	1	A1	SF	1 11/16	2	1¾	30.2
9.0	9.4	9.75	8.00	⅝	A3	SF	1 5/16	2	1⅜	25.1	1	A2	SF	1 11/16	2	1¾	25.7
10.6	11.0	11.35	9.62	⅝	A3	SF	1 5/16	2	1⅜	31.0	1	A3	SF	1 11/16	2	1¾	36.0
12.0	12.4	12.75	11.06	⅝	A3	SF	1 5/16	2	1⅜	34.0	1	A3	SF	1 11/16	2	1¾	37.5
13.2	13.6	13.95	12.31	⅝	A3	SF	1 5/16	2	1⅜	36.7	1	A3	SF	1 11/16	2	1¾	41.7
15.0	15.4	15.75	14.06	⅝	A3	SF	1 5/16	2	1⅜	42.3	1	A3	SF	1 11/16	2	1¾	46.1
15.6	16.0	16.35	14.62	⅝	A3	SF	1 5/16	2	1⅜	47.1	1	A3	SF	1 11/16	2	1¾	51.8
18.0	18.4	18.75	17.00	⅝	A3	SF	1 5/16	2	1⅜	54.8	1	A3	SF	1 11/16	2	1¾	60.7
19.6	20.0	20.35	18.56	11/32	A3	E	1¼	2⅝	1 1/32	79.9	13/32	A3	E	1⅜	2⅝	1 21/32	78.3
24.6	25.0	25.35	23.38	11/32	A3	E	1¼	2⅝	1 1/32	97.2	13/32	A3	E	1⅜	2⅝	1 21/32	116.8
29.6	30.0	30.35	28.50	11/32	A3	E	1¼	2⅝	1 1/32	124.2	13/32	A3	E	1⅜	2⅝	1 21/32	144.5
37.6	38.0	38.35	36.38	11/32	A3	E	1¼	2⅝	1 1/32	172.7	13/32	A3	E	1⅜	2⅝	1 21/32	189.9

* “E” Dimension varies according to shaft tolerance.
** Also available from stock made for the SF Bushing to accomodate larger bores.
All published dimensions are for reference only and are subject to change without notice.
Weights for all bushed items are approximate and include the bushing.
P.D. for “A” Belts = O.D. - .37
P.D. for “B” Belts = O.D. + .01

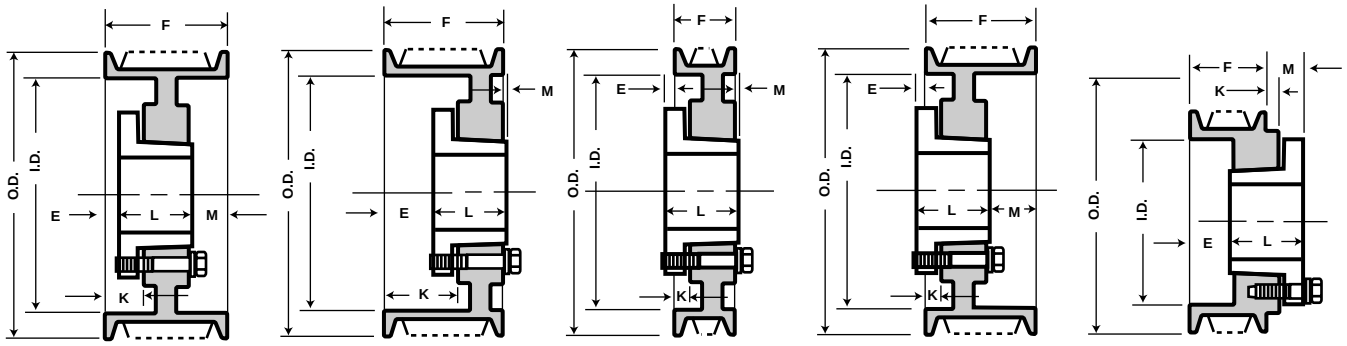

Type A Type B Type C Type D Type E

CARLISLE CLASSICAL QD SHEAVES
Stock Conventional “A - B” Sheaves

“A-B” Dimensions (Inches)

Datum Dia.		O.D. ◇	I.D.	7 Groove							8 Groove						
				F = 5½							F = 6¼						
A belts	B belts			E*	Type	Bush.	K	L	M	Wt.	E*	Type	Bush.	K	L	M	Wt.
5.0	5.4	5.75	4.12	1 3/32	A1	SK	1 13/16	1 7/8	2 17/32	14.7	1 3/32	A1	SK	1 13/16	1 7/8	3 9/32	16.0
5.2	5.6	5.95	4.25	1 3/32	A1	SK	1 13/16	1 7/8	2 17/32	16.1	1 3/32	A1	SK	1 13/16	1 7/8	3 9/32	20.6
5.4	5.8	6.15	4.44	1 3/32	A1	SK	1 13/16	1 7/8	2 17/32	17.1	1 3/32	A1	SK	1 13/16	1 7/8	3 9/32	18.7
5.6	6.0	6.35	4.68	1 1/8	A1	SF	1 13/16	2	2 3/8	18.2	1 1/8	A1	SF	1 13/16	2	3 1/8	19.7
5.8	6.2	6.55	4.81	1 1/8	A1	SF	1 13/16	2	2 3/8	19.7	1 1/8	A1	SF	1 13/16	2	3 1/8	21.5
6.0	6.4	6.75	5.06	1 1/8	A1	SF	1 13/16	2	2 3/8	20.3	1 1/8	A1	SF	1 13/16	2	3 1/8	22.0
6.2	6.6	6.95	5.25	1 1/8	A1	SF	1 13/16	2	2 3/8	21.4	1 1/8	A1	SF	1 13/16	2	3 1/8	23.2
6.4	6.8	7.15	5.44	1 1/8	A1	SF	1 13/16	2	2 3/8	22.5	1 1/8	A1	SF	1 13/16	2	3 1/8	24.4
6.6	7.0	7.35	5.62	1 1/8	A1	SF	1 13/16	2	2 3/8	23.7	1 1/8	A1	SF	1 13/16	2	3 1/8	25.7
7.0	7.4	7.75	6.06	1 1/8	A1	SF	1 13/16	2	2 3/8	25.7	1 1/8	A1	SF	1 13/16	2	3 1/8	27.7
8.2	8.6	8.95	7.25	1 3/32	A1	E	2	2 5/8	1 25/32	38.4	1 15/32	A1	E	2 3/8	2 5/8	2 5/32	40.9
9.0	9.4	9.75	8.06	1 3/32	A2	E	2	2 5/8	1 25/32	39.6	1 15/32	A2	E	2 3/8	2 5/8	2 5/32	42.4
10.6	11.0	11.35	9.62	1 3/32	A2	E	2	2 5/8	1 25/32	48.9	1 15/32	A2	E	2 3/8	2 5/8	2 5/32	52.2
12.0	12.4	12.75	11.04	1 3/32	A2	E	2	2 5/8	1 25/32	56.3	1 15/32	A2	E	2 3/8	2 5/8	2 5/32	59.5
13.2	13.6	13.95	12.25	1 3/32	A3	E	2	2 5/8	1 25/32	55.8	1 15/32	A3	E	2 3/8	2 5/8	2 5/32	59.8
15.0	15.4	15.75	14.00	1 3/32	A3	E	2	2 5/8	1 25/32	67.4	1 15/32	A3	E	2 3/8	2 5/8	2 5/32	70.8
15.6	16.0	16.35	14.62	1 3/32	A3	E	2	2 5/8	1 25/32	70.6	1 15/32	A3	E	2 3/8	2 5/8	2 5/32	73.9
18.0	18.4	18.75	16.75	1/4	A3	F	1 5/16	3 5/8	1 5/8	102.5	1/4	A3	F	1 5/16	3 5/8	2 3/8	111.7
19.6	20.0	20.35	18.56	1/4	A3	F	1 5/16	3 5/8	1 5/8	105.9	1/4	A3	F	1 5/16	3 5/8	2 3/8	113.4
24.6	25.0	25.35	23.38	1/4	A3	F	1 5/16	3 5/8	1 5/8	133.6	1/4	A3	F	1 5/16	3 5/8	2 3/8	145.9
29.6	30.0	30.35	28.38	1/4	A3	F	1 5/16	3 5/8	1 5/8	172.0	1/4	A3	F	1 5/16	3 5/8	2 3/8	183.0
37.6	38.0	38.35	36.38	1/4	A3	F	1 5/16	3 5/8	1 5/8	243.4	1/4	A3	F	1 5/16	3 5/8	2 3/8	246.9

Datum Dia.		O.D. ◇	I.D.	10 Groove						
				F = 7¾						
A belts	B belts			E*	Type	Bush.	K	L	M	Wt.
5.0	5.4	5.75	4.12	1 27/32	A1	SK	2 9/16	1 7/8	4 1/32	18.7
5.2	5.6	5.95	4.25	1 27/32	A1	SK	2 9/16	1 7/8	4 1/32	20.6
5.4	5.8	6.15	4.38	1 27/32	A1	SK	2 9/16	1 7/8	4 1/32	21.8
5.6	6.0	6.35	4.68	1 7/8	A1	SF	2 9/16	2	3 7/8	22.9
5.8	6.2	6.55	4.81	1 7/8	A1	SF	2 9/16	2	3 7/8	25.0
6.0	6.4	6.75	5.06	1 7/8	A1	SF	2 9/16	2	3 7/8	25.5
6.2	6.6	6.95	5.25	1 7/8	A1	SF	2 9/16	2	3 7/8	26.8
6.4	6.8	7.15	5.44	1 7/8	A1	SF	2 9/16	2	3 7/8	28.2
6.6	7.0	7.35	5.62	1 7/8	A1	SF	2 9/16	2	3 7/8	29.6
7.0	7.4	7.75	6.06	1 7/8	A1	SF	2 9/16	2	3 7/8	31.9
8.2	8.6	8.95	7.25	2 7/32	A1	E	3 1/8	2 5/8	2 29/32	45.8
9.0	9.4	9.75	8.12	2 7/32	A2	E	3 1/8	2 5/8	2 29/32	46.7
10.6	11.0	11.35	9.62	2 7/32	A2	E	3 1/8	2 5/8	2 29/32	58.8
12.0	12.4	12.75	11.06	2 7/32	A2	E	3 1/8	2 5/8	2 29/32	66.8
13.2	13.6	13.95	12.25	1	A3	F	2 1/16	3 5/8	3 1/8	83.6
15.0	15.4	15.75	14.00	1	A3	F	2 1/16	3 5/8	3 1/8	96.1
15.6	16.0	16.35	14.62	1	A3	F	2 1/16	3 5/8	3 1/8	99.8
18.0	18.4	18.75	16.75	1	A3	F	2 1/16	3 5/8	3 1/8	125.9
19.6	20.0	20.35	18.56	1	A3	F	2 1/16	3 5/8	3 1/8	126.6
24.6	25.0	25.35	23.38	1	A3	F	2 1/16	3 5/8	3 1/8	165.4
29.6	30.0	30.35	28.38	1	A3	F	2 1/16	3 5/8	3 1/8	220.0
37.6	38.0	38.35	36.38	5/16	A3	J	1 9/16	4 1/2	2 15/16	306.1

* “E” Dimension varies according to shaft tolerance.
** Also available from stock made for the SF Bushing to accomodate larger bores.
All published dimensions are for reference only and are subject to change without notice.
Weights for all bushed items are approximate and include the bushing.
◇ P.D. for “A” Belts = O.D. - .37
P.D. for “B” Belts = O.D. + .01

CARLISLE CLASSICAL QD SHEAVES

Stock Conventional "CQ" Section Sheaves

The sheaves listed below are all stock sizes. The dimensions given are with the bushings in place. When ordering specify the bushing, if required, and the bore size. The figure following the letter in the "Type" column indicates the sheave construction: 1 — Solid, 2 — Web, 3 — Arms. When ordering specify the sheave by the datum diameter: Example 9.0 x 2C and, if required, the bushing and bore size.

CQ Dimensions (inches)

Datum Dia.	O.D. ◇	I.D.	1 Groove F = 1 3/8							2 Groove F = 2 3/8						
			E*	Type	Bush	K	L	M	Wt.	E*	Type	Bush	K	L	M	Wt.
5.6	6.0	3.75	—	—	—	—	—	—	—	3/16	A1	SD	13/16	1 13/16	3/8	9.6
7.0	7.4	5.25	9/16	C1	SF	1/8	2	1/16	12.6	1/8	A1	SF	13/16	2	1/4	15.4
7.5	7.9	5.75	9/16	C1	SF	1/8	2	1/16	14.4	1/8	A1	SF	13/16	2	1/4	17.4
8.0	8.4	6.25	9/16	C1	SF	1/8	2	1/16	16.0	1/8	A1	SF	13/16	2	1/4	19.3
8.5	8.9	6.75	9/16	C2	SF	1/8	2	1/16	15.6	1/8	A1	SF	13/16	2	1/4	21.6
9.0	9.4	7.25	9/16	C2	SF	1/8	2	1/16	16.7	1/8	A2	SF	13/16	2	1/4	21.2
9.5	9.9	7.68	9/16	C2	SF	1/8	2	1/16	18.1	1/8	A2	SF	13/16	2	1/4	23.1
10.0	10.4	8.25	9/16	C2	SF	1/8	2	1/16	19.1	1/8	A2	SF	13/16	2	1/4	24.4
10.5	10.9	8.75	9/16	C2	SF	1/8	2	1/16	20.4	1/8	A3	SF	13/16	2	1/4	26.2
11.0	11.4	9.25	9/16	C3	SF	1/8	2	1/16	18.4	1/8	A3	SF	13/16	2	1/4	22.5
12.0	12.4	10.25	9/16	C3	SF	1/8	2	1/16	19.9	1/8	D3	SF	9/16	2	1/2	24.7
13.0	13.4	11.25	9/16	C3	SF	1/8	2	1/16	21.5	1/8	D3	SF	9/16	2	1/2	26.9
14.0	14.4	12.25	9/16	C3	SF	1/8	2	1/16	23.3	1/8	D3	SF	9/16	2	1/2	28.9
16.0	16.4	14.12	9/16	C3	SF	1/8	2	1/16	26.5	1/8	D3	SF	9/16	2	1/2	35.2
18.0	18.4	16.06	9/16	C3	SF	1/8	2	1/16	30.8	1/8	D3	SF	9/16	2	1/2	45.2
20.0	20.4	18.06	9/16	C3	SF	1/8	2	1/16	34.8	1/8	D3	SF	9/16	2	1/2	45.1
24.0	24.4	22.18	9/16	C3	SF	1/8	2	1/16	44.2	1/8	D3	SF	9/16	2	1/2	61.6
27.0	27.4	25.12	—	—	—	—	—	—	—	3/4	C3	F	5/16	3 5/8	1/2	89.8
30.0	30.4	28.18	—	—	—	—	—	—	—	3/4	C3	F	5/16	3 5/8	1/2	107.3

Datum Dia.	O.D. ◇	I.D.	3 Groove F = 3 3/8							4 Groove F = 4 3/8							5 Groove F = 5 3/8						
			E*	Type	Bush	K	L	M	Wt.	E*	Type	Bush	K	L	M	Wt.	E*	Type	Bush	K	L	M	Wt.
5.0	5.4	3.25	7/16	A1	SD	1 1/16	1 13/16	1 1/8	9.7	15/16	A1	SD	1 9/16	1 13/16	1 5/8	11.3	—	—	—	—	—	—	—
5.6	6.0	3.75	11/16	A1	SD	1 5/16	1 13/16	7/8	12.2	15/16	A1	SD	1 9/16	1 13/16	1 5/8	13.9	—	—	—	—	—	—	—
6.0	6.4	4.68	5/8	A1	SF	1 5/16	2	3/4	12.4	7/8	A1	SF	1 9/16	2	1 1/2	13.9	1 5/16	A1	SF	1 15/16	2	2 1/16	15.5
7.0	7.4	5.25	5/8	A1	SF	1 5/16	2	3/4	18.2	7/8	A1	SF	1 9/16	2	1 1/2	20.3	1 1/4	A1	SF	1 15/16	2	2 1/8	23.8
7.5	7.9	5.75	5/8	A1	SF	1 5/16	2	3/4	20.5	7/8	A1	SF	1 9/16	2	1 1/2	23.5	1 1/4	A1	SF	1 15/16	2	2 1/8	26.6
8.0	8.4	6.25	27/32	B1	E	1 3/4	2 5/8	3/32	27.6	1 3/32	A1	E	2	2 5/8	21/32	30.9	1 15/32	A1	E	2 3/8	2 5/8	1 9/32	34.2
8.5	8.9	6.75	27/32	B1	E	1 3/4	2 5/8	3/32	30.6	1 3/32	A1	E	2	2 5/8	21/32	34.2	1 15/32	A1	E	2 3/8	2 5/8	1 9/32	37.7
9.0	9.4	7.25	27/32	B1	E	1 3/4	2 5/8	3/32	33.8	1 3/32	A1	E	2	2 5/8	21/32	37.6	1 15/32	A1	E	2 3/8	2 5/8	1 9/32	41.4
9.5	9.9	7.68	27/32	B1	E	1 3/4	2 5/8	3/32	37.5	1 3/32	A2	E	2	2 5/8	21/32	41.8	1 15/32	A1	E	2 3/8	2 5/8	1 9/32	46.0
10.0	10.4	8.25	27/32	B1	E	1 3/4	2 5/8	3/32	40.7	1 3/32	A2	E	2	2 5/8	21/32	45.0	1 15/32	A1	E	2 3/8	2 5/8	1 9/32	49.3
10.5	10.9	8.75	27/32	B2	E	1 3/4	2 5/8	3/32	38.3	1 3/32	A2	E	2	2 5/8	21/32	42.8	1 15/32	A2	E	2 3/8	2 5/8	1 9/32	47.3
11.0	11.4	9.25	27/32	B2	E	1 3/4	2 5/8	3/32	40.5	1 3/32	A2	E	2	2 5/8	21/32	45.3	1 15/32	A2	E	2 3/8	2 5/8	1 9/32	50.0
12.0	12.4	10.25	27/32	B2	E	1 3/4	2 5/8	3/32	45.3	1 3/32	A2	E	2	2 5/8	21/32	50.5	1 15/32	A2	E	2 3/8	2 5/8	1 9/32	55.7
13.0	13.4	11.25	27/32	B2	E	1 3/4	2 5/8	3/32	49.3	1 3/32	A2	E	2	2 5/8	21/32	56.3	1 15/32	A2	E	2 3/8	2 5/8	1 9/32	62.0
14.0	14.4	12.25	27/32	B3	E	1 3/4	2 5/8	3/32	48.6	1 3/32	A3	E	2	2 5/8	21/32	57.6	1 15/32	A3	E	2 3/8	2 5/8	1 9/32	64.1
16.0	16.4	14.12	27/32	B3	E	1 3/4	2 5/8	3/32	58.0	1 3/32	A3	E	2	2 5/8	21/32	67.1	1 15/32	A3	E	2 3/8	2 5/8	1 9/32	78.1
18.0	18.4	16.06	27/32	B3	E	1 3/4	2 5/8	3/32	72.6	1 3/32	A3	E	2	2 5/8	21/32	82.7	1 15/32	A3	E	2 3/8	2 5/8	1 9/32	92.9
20.0	20.4	18.06	3/32	A3	E	1	2 5/8	0	75.8	1/4	A3	E	1 1/2	2 5/8	1 5/32	90.5	1/4	A3	F	1 5/16	3 5/8	1 1/2	109.5
24.0	24.4	22.18	3/32	A3	E	1	2 5/8	0	85.6	1/4	A3	F	1 5/16	3 5/8	1/2	110.8	1/4	A3	F	1 5/16	3 5/8	1 1/2	141.0
27.0	27.4	25.12	1/4	C3	F	13/16	3 5/8	0	121.0	1/4	A3	F	1 5/16	3 5/8	1/2	138.0	1/4	A3	F	1 5/16	3 5/8	1 1/2	159.0
30.0	30.4	28.18	1/4	C3	F	13/16	3 5/8	0	129.1	1/4	A3	F	1 5/16	3 5/8	1/2	150.1	1/4	A3	F	1 5/16	3 5/8	1 1/2	171.2
36.0	36.4	34.12	1/4	C3	F	13/16	3 5/8	0	177.1	1/4	A3	F	1 5/16	3 5/8	1/2	211.1	5/16	A3	J	1 9/16	4 1/2	9/16	236.3
44.0	44.4	42.12	1/4	C3	F	13/16	3 5/8	0	260.1	5/16	B3	J	1 9/16	4 1/2	7/16	296.5	5/16	A3	J	1 9/16	4 1/2	9/16	309.2
50.0	50.4	48.00	1/4	C3	F	13/16	3 5/8	0	319.1	5/16	B3	J	1 9/16	4 1/2	7/16	360.5	5/16	A3	J	1 9/16	4 1/2	9/16	381.8

* "E" Dimension varies according to shaft tolerance. Weights for all bushed items are approximate and include the bushing.
All published dimensions are for reference only and are subject to change without notice.

◇ P.D. is the same as O.D.

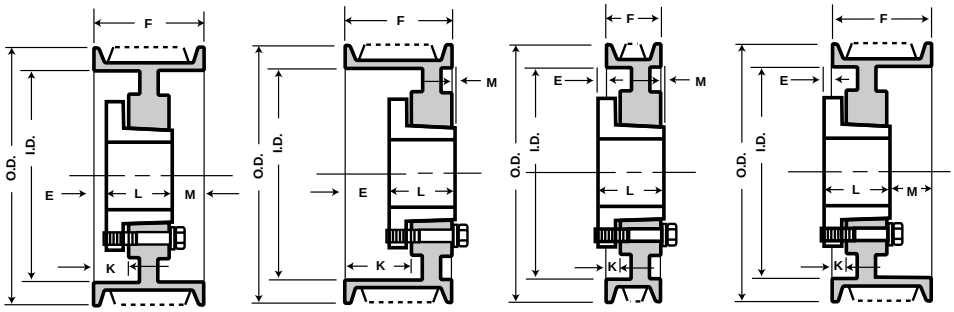

Type A Type B Type C Type D

CARLISLE CLASSICAL QD SHEAVES

Stock Conventional “CQ” Section Sheaves

CQ Dimensions (inches)

Datum Dia.	O.D. ◇	I.D.	6 Groove F = 6 3/8							7 Groove F = 7 3/8							8 Groove F = 8 3/8						
			E*	Type	Bush	K	L	M	Wt.	E*	Type	Bush	K	L	M	Wt.	E*	Type	Bush	K	L	M	Wt.
6.0	6.4	4.68	1 5/16	A1	SF	1 5/16	2	3 1/16	17.0	—	—	—	—	—	—	—	—	—	—	—	—	—	—
7.0	7.4	5.25	1 1/4	A1	SF	1 5/16	2	3 1/8	26.6	2 1/4	A1	SF	2 15/16	2	3 1/8	29.4	2 7/16	A1	SF	3 1/8	2	3 15/16	32.2
7.5	7.9	5.75	1 1/4	A1	SF	1 5/16	2	3 1/8	29.6	—	—	—	—	—	—	—	—	—	—	—	—	—	—
8.0	8.4	6.25	1 15/32	A1	E	2 3/8	2 5/8	2 9/32	37.5	2 11/32	A1	E	3 1/4	2 5/8	2 13/32	40.9	2 11/32	A1	E	3 1/4	2 5/8	3 13/32	44.2
8.5	8.9	6.75	1 15/32	A1	E	2 3/8	2 5/8	2 9/32	41.3	2 11/32	A1	E	3 1/4	2 5/8	2 13/32	44.8	2 11/32	A1	E	3 1/4	2 5/8	3 13/32	48.4
9.0	9.4	7.25	1 3/8	A1	F	2 7/16	3 5/8	1 3/8	53.4	2 1/4	A1	F	3 5/16	3 5/8	1 1/2	57.1	2 1/4	A1	F	3 5/16	3 5/8	2 1/2	60.9
9.5	9.9	7.68	1 3/8	A1	F	2 7/16	3 5/8	1 3/8	59.5	2 1/4	A1	F	3 5/16	3 5/8	1 1/2	63.7	2 1/4	A1	F	3 5/16	3 5/8	2 1/2	68.0
10.0	10.4	8.25	1 3/8	A1	F	2 7/16	3 5/8	1 3/8	64.4	2 1/4	A1	F	3 5/16	3 5/8	1 1/2	68.7	2 1/4	A1	F	3 5/16	3 5/8	2 1/2	73.0
10.5	10.9	8.75	1 3/8	A1	F	2 7/16	3 5/8	1 3/8	70.4	2 1/4	A1	F	3 5/16	3 5/8	1 1/2	74.9	2 1/4	A1	F	3 5/16	3 5/8	2 1/2	79.4
11.0	11.4	9.25	1 3/8	A1	F	2 7/16	3 5/8	1 3/8	76.6	2 1/4	A1	F	3 5/16	3 5/8	1 1/2	81.3	2 1/4	A1	F	3 5/16	3 5/8	2 1/2	86.0
12.0	12.4	10.25	1 3/8	A2	F	2 7/16	3 5/8	1 3/8	72.9	2 1/4	A2	F	3 5/16	3 5/8	1 1/2	78.1	2 1/4	A2	F	3 5/16	3 5/8	2 1/2	83.3
13.0	13.4	11.25	1 3/8	A2	F	2 7/16	3 5/8	1 3/8	80.4	2 1/4	A2	F	3 5/16	3 5/8	1 1/2	86.0	2 1/4	A2	F	3 5/16	3 5/8	2 1/2	91.7
14.0	14.4	12.25	1 3/8	A3	F	2 7/16	3 5/8	1 3/8	83.4	2 1/4	A2	F	3 5/16	3 5/8	1 1/2	92.2	2 1/4	A2	F	3 5/16	3 5/8	2 1/2	102.0
16.0	16.4	14.12	1 3/8	A3	F	2 7/16	3 5/8	1 3/8	98.1	2 1/4	A2	F	3 5/16	3 5/8	1 1/2	111.1	2 1/4	A2	F	3 5/16	3 5/8	2 1/2	119.0
18.0	18.4	16.06	1 3/8	A3	F	2 7/16	3 5/8	1 3/8	108.7	2 1/4	A3	F	3 5/16	3 5/8	1 1/2	124.3	2 1/4	A3	F	3 5/16	3 5/8	2 1/2	133.7
20.0	20.4	18.06	7/8	A3	F	1 5/16	3 5/8	1 7/8	120.2	5/16	A3	J	1 9/16	4 1/2	2 9/16	155.3	5/16	A3	J	1 9/16	4 1/2	3 9/16	162.0
24.0	24.4	22.18	7/8	A3	F	1 5/16	3 5/8	1 7/8	132.5	5/16	A3	J	1 9/16	4 1/2	2 9/16	184.5	5/16	A3	J	1 9/16	4 1/2	3 9/16	189.4
27.0	27.4	25.12	5/16	A3	J	1 9/16	4 1/2	1 9/16	190.0	5/16	A3	J	1 9/16	4 1/2	2 9/16	211.8	5/16	A3	J	1 9/16	4 1/2	3 9/16	242.3
30.0	30.4	28.18	5/16	A3	J	1 9/16	4 1/2	1 9/16	214.5	5/16	A3	J	1 9/16	4 1/2	2 9/16	236.8	5/16	A3	J	1 9/16	4 1/2	3 9/16	256.0
36.0	36.4	34.12	5/16	A3	J	1 9/16	4 1/2	1 9/16	280.5	5/16	A3	J	1 9/16	4 1/2	2 9/16	300.5	15/32	A3	M	1 9/16	6 3/4	1 5/32	406.0
44.0	44.4	42.12	5/16	A3	J	1 9/16	4 1/2	1 9/16	347.5	5/32	A3	M	1 15/16	6 3/4	5/32	484.0	15/32	A3	M	1 15/16	6 3/4	1 5/32	510.0
50.0	50.4	48.00	15/32	B3	M	1 15/16	6 3/4	2 7/32	533.0	5/32	A3	M	1 15/16	6 3/4	5/32	563.0	15/32	A3	M	1 15/16	6 3/4	1 5/32	593.0

Datum Dia.	O.D. ◇	I.D.	9 Groove F = 9 3/8							10 Groove F = 10 3/8							12 Groove F = 12 3/8						
			E*	Type	Bush	K	L	M	Wt.	E*	Type	Bush	K	L	M	Wt.	E*	Type	Bush	K	L	M	Wt.
7.0	7.4	5.25	—	—	—	—	—	—	—	—	—	—	—	—	—	—	—	—	—	—	—	—	—
8.0	8.4	6.25	2 11/32	A1	E	3 1/4	2 5/8	4 13/32	47.5	2 11/32	A1	E	3 1/4	2 5/8	5 13/32	50.8	—	—	—	—	—	—	—
8.5	8.9	6.75	2 11/32	A1	E	3 1/4	2 5/8	4 13/32	51.9	2 11/32	A1	E	3 1/4	2 5/8	5 13/32	55.5	—	—	—	—	—	—	—
9.0	9.4	7.25	2 5/16	A1	J	3 9/16	4 1/2	2 9/16	71.0	2 5/16	A1	J	3 9/16	4 1/2	3 9/16	74.5	2 13/16	A1	J	4 1/16	4 1/2	5 1/16	81.5
9.5	9.9	7.68	2 5/16	A1	J	3 9/16	4 1/2	2 9/16	79.6	2 5/16	A1	J	3 9/16	4 1/2	3 9/16	83.8	2 13/16	A1	J	4 1/16	4 1/2	5 1/16	92.2
10.0	10.4	8.25	2 5/16	A1	J	3 9/16	4 1/2	2 9/16	85.9	2 5/16	A1	J	3 9/16	4 1/2	3 9/16	90.1	2 13/16	A1	J	4 1/16	4 1/2	5 1/16	98.6
10.5	10.9	8.75	2 5/16	A1	J	3 9/16	4 1/2	2 9/16	93.7	2 5/16	A1	J	3 9/16	4 1/2	3 9/16	98.2	2 13/16	A1	J	4 1/16	4 1/2	5 1/16	107.2
11.0	11.4	9.25	2 5/16	A1	J	3 9/16	4 1/2	2 9/16	101.9	2 5/16	A1	J	3 9/16	4 1/2	3 9/16	106.6	2 13/16	A1	J	4 1/16	4 1/2	5 1/16	116.1
12.0	12.4	10.25	2 5/16	A1	J	3 9/16	4 1/2	2 9/16	119.1	2 5/16	A1	J	3 9/16	4 1/2	3 9/16	124.4	2 13/16	A1	J	4 1/16	4 1/2	5 1/16	134.8
13.0	13.4	11.25	2 5/16	A2	J	3 9/16	4 1/2	2 9/16	111.9	2 5/16	A2	J	3 9/16	4 1/2	3 9/16	117.6	2 13/16	A1	J	4 1/16	4 1/2	5 1/16	159.5
14.0	14.4	12.25	2 5/16	A2	J	3 9/16	4 1/2	2 9/16	120.5	2 5/16	A2	J	3 9/16	4 1/2	3 9/16	126.8	2 13/16	A1	J	4 1/16	4 1/2	5 1/16	143.3
16.0	16.4	14.12	2 5/16	A2	J	3 9/16	4 1/2	2 9/16	146.2	2 5/16	A2	J	3 9/16	4 1/2	3 9/16	157.3	2 13/16	A2	J	4 1/16	4 1/2	5 1/16	176.3
18.0	18.4	16.06	2 5/16	A3	J	3 9/16	4 1/2	2 9/16	155.3	2 5/16	A3	J	3 9/16	4 1/2	3 9/16	164.7	2 13/16	A2	J	4 1/16	4 1/2	5 1/16	188.0
20.0	20.4	18.06	1 13/16	A3	J	3 9/16	4 1/2	3 1/16	175.2	2 5/16	A3	J	3 9/16	4 1/2	3 9/16	185.7	15/32	A3	M	1 15/16	6 3/4	5 5/32	292.1
24.0	24.4	22.18	1 13/16	A3	J	3 9/16	4 1/2	3 1/16	207.7	15/32	A3	M	1 15/16	6 3/4	3 5/32	297.8	15/32	A3	M	1 15/16	6 3/4	5 5/32	360.9
27.0	27.4	25.12	1 13/16	A3	J	3 9/16	4 1/2	3 1/16	242.8	—	—	—	—	—	—	—	—	—	—	—	—	—	—
30.0	30.4	28.18	15/32	A3	M	1 15/16	6 3/4	2 5/32	351.5	15/32	A3	M	1 15/16	6 3/4	3 5/32	366.8	15/32	A3	M	1 15/16	6 3/4	5 5/32	397.4
36.0	36.4	34.12	15/32	A3	M	1 15/16	6 3/4	2 5/32	425.0	15/32	A3	M	1 15/16	6 3/4	3 5/32	445.0	15/32	A3	M	1 15/16	6 3/4	5 5/32	483.0
44.0	44.4	42.12	15/32	A3	M	1 15/16	6 3/4	2 5/32	535.0	15/32	A3	M	1 15/16	6 3/4	3 5/32	595.0	15/32	A3	M	1 15/16	6 3/4	5 5/32	645.0
50.0	50.5	48.00	15/32	A3	M	1 15/16	6 3/4	2 5/32	623.0	15/32	A3	M	1 15/16	6 3/4	3 5/32	718.0	15/32	A3	M	1 15/16	6 3/4	5 5/32	779.0

* “E” Dimension varies according to shaft tolerance. Weights for all bushed items are approximate and include the bushing.
All published dimensions are for reference only and are subject to change without notice.

◇ P.D. is the same as O.D.

CARLISLE CLASSICAL QD SHEAVES

Stock Conventional “DQ” Section Sheaves

The sheaves listed below are all stock sizes. The dimensions given are with the bushings in place. When ordering specify the bushing, if required, and the bore size. The figure following the letter in the “Type” column indicates the sheave construction: 1 — Solid, 2 — Web, 3 — Arms. When ordering specify the sheave by the datum diameter: Example 12.0 x 6D and, if required, the bushing and bore size.

DQ Dimensions (inches)

Datum Dia.	O.D. ◇	I.D.	3 Groove F = 4 5/8							4 Groove F = 6 1/16						
			E*	Type	Bush	K	L	M	Wt.	E*	Type	Bush	K	L	M	Wt.
12.0	12.6	9.75	7/16	A2	F	1 1/2	3 5/8	9/16	69.6	1 1/4	A2	F	2 5/16	3 5/8	1 3/16	79.5
13.0	13.6	10.75	7/16	A2	F	1 1/2	3 5/8	9/16	73.4	1 1/4	A2	F	2 5/16	3 5/8	1 3/16	85.2
13.5	14.1	11.25	7/16	A2	F	1 1/2	3 5/8	9/16	76.6	1 1/4	A2	F	2 5/16	3 5/8	1 3/16	89.1
14.0	14.6	11.75	7/16	A2	F	1 1/2	3 5/8	9/16	79.8	1 1/4	A2	F	2 5/16	3 5/8	1 3/16	93.1
14.5	15.1	12.25	7/16	A2	F	1 1/2	3 5/8	9/16	83.2	1 1/4	A2	F	2 5/16	3 5/8	1 3/16	97.2
15.0	15.6	12.75	7/16	A2	F	1 1/2	3 5/8	9/16	89.3	1 1/4	A2	F	2 5/16	3 5/8	1 3/16	101.3
15.5	16.1	13.25	7/16	A2	F	1 1/2	3 5/8	9/16	90.7	1 1/4	A2	F	2 5/16	3 5/8	1 3/16	103.2
16.0	16.6	13.75	7/16	A2	F	1 1/2	3 5/8	9/16	94.6	1 1/4	A2	F	2 5/16	3 5/8	1 3/16	107.5
17.0	17.6	14.75	—	—	—	—	—	—	—	1 5/16	A2	J	2 9/16	4 1/2	1/4	144.9
18.0	18.6	15.62	1/16	D3	J	1 3/16	4 1/2	3/16	124.9	1 5/16	A2	J	2 9/16	4 1/2	1/4	144.9
20.0	20.6	17.50	—	—	—	—	—	—	—	5/16	A3	J	1 9/16	4 1/2	1 1/4	151.3
22.0	22.6	19.44	1/16	D3	J	1 3/16	4 1/2	3/16	139.5	5/16	A3	J	1 9/16	4 1/2	1 1/4	174.5
24.0	24.6	21.44	1/16	D3	J	1 3/16	4 1/2	3/16	153.5	5/16	A3	J	1 9/16	4 1/2	1 1/4	188.5
27.0	27.6	24.25	1/16	D3	J	1 3/16	4 1/2	3/16	179.5	5/16	A3	J	1 9/16	4 1/2	1 1/4	209.5
33.0	33.6	30.18	1/16	D3	J	1 3/16	4 1/2	3/16	226.5	15/32	B3	M	1 15/16	6 3/4	1 5/32	341.0
40.0	40.6	37.18	1/16	D3	J	1 3/16	4 1/2	3/16	272.5	15/32	B3	M	1 15/16	6 3/4	1 5/32	391.0
48.0	48.6	—	—	—	—	—	—	—	—	—	—	—	—	—	—	—
58.0	58.6	—	—	—	—	—	—	—	—	—	—	—	—	—	—	—

Datum Dia.	O.D. ◇	I.D.	5 Groove F = 7 1/2						
			E*	Type	Bush	K	L	M	Wt.
12.0	12.6	9.75	2	A2	F	3 1/16	3 5/8	1 7/8	89.8
13.0	13.6	10.75	2	A2	F	3 1/16	3 5/8	1 7/8	95.5
13.5	14.1	11.25	2	A2	F	3 1/16	3 5/8	1 7/8	99.8
14.0	14.6	11.75	2	A2	F	3 1/16	3 5/8	1 7/8	104.2
14.5	15.1	12.25	2	A2	F	3 1/16	3 5/8	1 7/8	111.2
15.0	15.6	12.75	2	A2	F	3 1/16	3 5/8	1 7/8	116.1
15.5	16.1	13.25	2	A2	F	3 1/16	3 5/8	1 7/8	118.4
16.0	16.6	13.75	2	A2	F	3 1/16	3 5/8	1 7/8	123.5
17.0	17.6	14.75	2 1/16	A2	J	3 5/16	4 1/2	15/16	144.1
18.0	18.6	15.62	2 1/16	A2	J	3 5/16	4 1/2	15/16	160.9
20.0	20.6	17.50	5/16	A3	J	1 9/16	4 1/2	2 11/16	170.5
22.0	22.6	19.44	5/16	A3	J	1 9/16	4 1/2	2 11/16	191.5
24.0	24.6	21.44	5/16	A3	J	1 9/16	4 1/2	2 11/16	210.5
27.0	27.6	24.38	15/32	A3	M	1 15/16	6 3/4	9/32	320.0
33.0	33.6	30.18	15/32	A3	M	1 15/16	6 3/4	9/32	373.0
40.0	40.6	37.18	15/32	A3	M	1 15/16	6 3/4	9/32	469.0
48.0	48.6	45.06	15/32	A3	M	1 15/16	6 3/4	9/32	591.0
58.0	58.6	55.06	15/32	A3	M	1 15/16	6 3/4	9/32	715.0

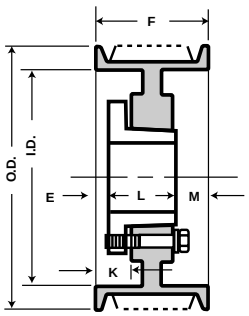

Type A

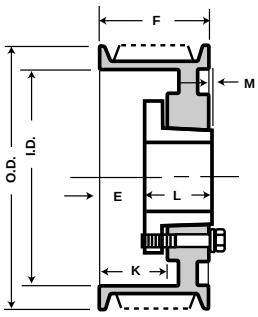

Type B

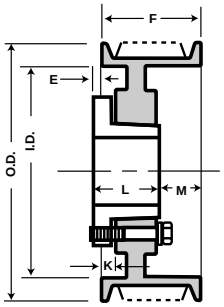

Type D

* “E” Dimension varies according to shaft tolerance.
Weights for all bushed items are approximate and include the bushing.
All published dimensions are for reference only and are subject to change without notice.

◇ P.D. is the same as O.D.

CARLISLE CLASSICAL QD SHEAVES

Stock Conventional "DQ" Section Sheaves

DQ Dimensions (inches)

Datum Dia.	O.D. ◇	I.D.	6 Groove F = 8 15/16							7 Groove F = 10 3/8				
			E*	Type	Bush	K	L	M	Wt.	E*	Type	Bush	M	Wt.
12.0	12.6	9.75	2 1/16	A2	J	3 5/16	4 1/2	2 3/8	121.9	2 5/16	A2	J	3 9/16	131.2
13.0	13.6	10.75	2 1/16	A2	J	3 5/16	4 1/2	2 3/8	120.3	2 5/16	A2	J	3 9/16	128.6
13.5	14.1	11.25	2 1/16	A2	J	3 5/16	4 1/2	2 3/8	125.8	2 5/16	A2	J	3 9/16	135.6
14.0	14.6	11.75	2 1/16	A2	J	3 5/16	4 1/2	2 3/8	131.4	2 5/16	A2	J	3 9/16	141.5
14.5	15.1	12.25	2 1/16	A2	J	3 5/16	4 1/2	2 3/8	137.1	2 5/16	A2	J	3 9/16	147.5
15.0	15.6	12.75	2 1/16	A2	J	3 5/16	4 1/2	2 3/8	142.9	2 5/16	A2	J	3 9/16	153.7
15.5	16.1	13.25	2 1/16	A2	J	3 5/16	4 1/2	2 3/8	148.9	2 5/16	A2	J	3 9/16	159.9
16.0	16.6	13.75	2 1/16	A2	J	3 5/16	4 1/2	2 3/8	155.0	2 5/16	A2	J	3 9/16	166.2
17.0	17.6	14.75	2 1/16	A2	J	3 5/16	4 1/2	2 3/8	161.3	2 5/16	A2	J	3 9/16	175.1
18.0	18.6	15.62	2 1/16	A2	J	3 5/16	4 1/2	2 3/8	180.9	2 5/32	A2	M	1 5/32	257.6
20.0	20.6	17.50	2 1/16	A3	J	3 5/16	4 1/2	2 3/8	189.6	2 5/32	A2	M	1 5/32	283.7
22.0	22.6	19.44	15/32	A3	M	1 15/16	6 3/4	1 23/32	281.0	15/32	A3	M	3 5/32	331.1
24.0	24.6	21.44	15/32	A3	M	1 15/16	6 3/4	1 23/32	306.0	—	—	—	—	—
27.0	27.6	24.38	15/32	A3	M	1 15/16	6 3/4	1 23/32	346.0	15/32	A3	M	3 5/32	389.1
33.0	33.6	30.18	15/32	A3	M	1 15/16	6 3/4	1 23/32	419.0	15/32	A3	M	3 5/32	486.1
40.0	40.6	37.18	15/32	A3	M	1 15/16	6 3/4	1 23/32	510.0	15/32	A3	M	3 5/32	611.3
48.0	48.6	45.06	15/32	A3	M	1 15/16	6 3/4	1 23/32	667.0	9/16	A3	N	1 11/16	812.3
58.0	58.6	55.06	9/16	A3	N	2 1/4	8 1/8	1/4	889.0	9/16	A3	N	1 11/16	986.7

Datum Dia.	O.D. ◇	I.D.	8 Groove F = 11 13/16							9 Groove F = 13 1/4				
			E*	Type	Bush	K	L	M	Wt.	E*	Type	Bush	M	Wt.
12.0	12.6	9.75	2 1/16	A1	J	3 9/16	4 1/2	5	140.5	2 15/32	A1	M	4 1/32	182.9
13.0	13.6	10.75	2 1/16	A1	J	3 9/16	4 1/2	5	163.5	2 15/32	A1	M	4 1/32	213.6
13.5	14.1	11.25	2 1/16	A1	J	3 9/16	4 1/2	5	176.5	2 15/32	A1	M	4 1/32	229.3
14.0	14.6	11.75	2 1/16	A2	J	3 9/16	4 1/2	5	157.5	2 15/32	A2	M	4 1/32	245.7
14.5	15.1	12.25	2 1/16	A2	J	3 9/16	4 1/2	5	167.5	2 15/32	A2	M	4 1/32	262.5
15.0	15.6	12.75	2 1/16	A2	J	3 9/16	4 1/2	5	170.5	2 15/32	A2	M	4 1/32	279.9
15.5	16.1	13.25	2 1/16	A2	J	3 9/16	4 1/2	5	175.2	2 15/32	A2	M	4 1/32	297.7
16.0	16.6	13.75	2 1/16	A2	J	3 9/16	4 1/2	5	182.3	2 15/32	A2	M	4 1/32	274.9
17.0	17.6	14.75	2 1/16	A2	J	3 9/16	4 1/2	5	192.3	2 15/32	A2	M	4 1/32	282.0
18.0	18.6	15.62	2 15/32	A2	M	3 15/16	6 3/4	2 19/32	276.7	2 15/32	A2	M	4 1/32	294.9
20.0	20.6	17.62	2 15/32	A2	M	3 15/16	6 3/4	2 19/32	306.0	—	—	—	—	—
22.0	22.6	19.44	15/32	A3	M	1 15/16	6 3/4	4 19/32	342.0	15/32	A3	M	6 1/32	380.8
27.0	27.6	24.38	15/32	A3	M	1 15/16	6 3/4	4 19/32	406.0	15/32	A3	M	6 1/32	453.1
33.0	33.6	30.13	15/32	A3	M	1 15/16	6 3/4	4 19/32	488.0	9/16	A3	N	4 9/16	655.6
40.0	40.6	37.18	9/16	A3	N	2 1/4	8 1/8	3 1/8	657.0	9/16	A3	N	4 9/16	815.8
48.0	48.6	45.06	9/16	A3	N	2 1/4	8 1/8	3 1/8	820.0	9/16	A3	N	4 9/16	946.2
58.0	58.6	55.06	9/16	A3	N	2 1/4	8 1/8	3 1/8	1088.0	3/4	A3	P	3 1/8	1268.1

Datum Dia.	O.D. ◇	I.D.	10 Groove F = 14 11/16							12 Groove F = 17 9/16						
			E*	Type	Bush	K	L	M	Wt.	E*	Type	Bush	K	L	M	Wt.
12.0	12.6	9.75	2 15/32	A1	M	3 15/16	6 3/4	5 15/32	192.3	3 15/32	A1	M	4 15/16	6 3/4	7 11/32	210.9
13.0	13.6	10.75	2 15/32	A1	M	3 15/16	6 3/4	5 15/32	223.8	3 15/32	A1	M	4 15/16	6 3/4	7 11/32	244.3
13.5	14.1	11.25	2 15/32	A1	M	3 15/16	6 3/4	5 15/32	240.1	3 15/32	A1	M	4 15/16	6 3/4	7 11/32	261.4
14.0	14.6	11.75	2 15/32	A2	M	3 15/16	6 3/4	5 15/32	256.8	3 15/32	A2	M	4 15/16	6 3/4	7 11/32	279.1
14.5	15.1	12.25	2 15/32	A2	M	3 15/16	6 3/4	5 15/32	274.1	3 15/32	A2	M	4 15/16	6 3/4	7 11/32	297.2
15.0	15.6	12.75	2 15/32	A2	M	3 15/16	6 3/4	5 15/32	291.9	3 15/32	A2	M	4 15/16	6 3/4	7 11/32	315.9
15.5	16.1	13.25	2 15/32	A2	M	3 15/16	6 3/4	5 15/32	310.2	3 15/32	A2	M	4 15/16	6 3/4	7 11/32	335.1
16.0	16.6	13.75	2 15/32	A2	M	3 15/16	6 3/4	5 15/32	287.8	3 15/32	A2	M	4 15/16	6 3/4	7 11/32	313.6
17.0	17.6	14.75	2 15/32	A2	M	3 15/16	6 3/4	5 15/32	295.6	3 15/32	A2	M	4 15/16	6 3/4	7 11/32	323.3
18.0	18.6	15.62	2 15/32	A2	M	3 15/16	6 3/4	5 15/32	310.9	3 15/32	A2	M	4 15/16	6 3/4	7 11/32	342.7
20.0	20.6	17.62	2 15/32	A2	M	3 15/16	6 3/4	5 15/32	346.2	3 15/32	A2	M	4 15/16	6 3/4	7 11/32	386.3
22.0	22.6	19.44	1 15/32	A3	M	2 15/16	6 3/4	6 15/32	402.8	2 15/32	A3	M	3 15/16	6 3/4	8 11/32	446.7
27.0	27.6	24.38	1 15/32	A3	M	2 15/16	6 3/4	6 15/32	481.1	2 9/16	A3	N	4 1/4	8 1/8	6 7/8	598.5
33.0	33.6	30.13	1 9/16	A3	N	3 1/4	8 1/8	5	693.5	2 9/16	A3	N	4 1/4	8 1/8	6 7/8	780.8
40.0	40.6	37.18	1 9/16	A3	N	3 1/4	8 1/8	5	865.5	3/4	A3	P	2 5/8	9 3/8	7 7/16	1025.7
48.0	48.6	45.06	3/4	A3	P	2 5/8	9 3/8	4 9/16	1074.4	3/4	A3	P	2 5/8	9 3/8	7 7/16	1262.7
58.0	58.6	55.06	3/4	A3	P	2 5/8	9 3/8	4 9/16	1340.4	3/4	A3	P	2 5/8	9 3/8	7 7/16	1542.1

* "E" Dimension varies according to shaft tolerance. Weights for all bushed items are approximate and include the bushing.
All published dimensions are for reference only and are subject to change without notice.

◇ P.D. is the same as O.D.

THE “DATUM” SYSTEM

This version of the Carlisle Engineering Guide For V-belt Drives covers a change in the industry standard for classical V-belts and Sheaves. The change involves the use of the “Datum” System in place of the previously used “Pitch” System. Flaws with the Pitch system are corrected with the Datum system and Datum diameters have now become the means of designating sheave size. When placing orders for sheaves, the Datum diameter (DD) is now used in place of the Pitch diameter, while for belt orders, Datum length replaces Pitch length.

The Datum system compensates for fundamental problems with the old Pitch system, eliminating inaccuracies from the V-belt drive design process. With the new system, pitch diameters become equivalent to outside diameters for standard depth sheaves with the exception of A-section or AX-section belts in A/B combination sheaves. Datum diameter becomes the term to represent the value previously known as Pitch Diameter while the new Pitch Diameter value more closely represents the actual Pitch line of modern V-belt construction. Simply put, a new name (Datum) is used for an old term (Pitch) while the old term is redefined to more accurately represent the true Pitch Diameter.

The term “Datum” was originally adopted by the International Standards Organization and subsequently by the Rubber Manufacturers’ Association Engineering Standard for Classical V-belt and Sheaves. Classical sheaves were previously designated by pitch diameter, before the acceptance of the Datum system in the United States. The utilization of the Datum system was initiated due to construction changes over the course of V-belt evolution. A transition in the location of the belt pitch line (due to the use of new tensile member materials) resulted in the nominal pitch diameter of the sheave no longer corresponding with the actual pitch line of the belt, when mated with the sheave groove. The center of the tensile cord is normally associated with the pitch line.

The diameter of the pulley through which the pitch line of the belt passes, defines the pitch diameter and the Datum system was specifically developed to achieve this as the pitch system no longer represented this accurately. The impracticality of determining P.D. to O.D. values for all manufacturers and their many different constructions have made the Datum system a compromise of all belt types and manufacturers as true pitch diameter and pitch length are not pre-determined values, but change according to belt dimension and construction.

Power transmission specialists have concluded that the ideal position of the tensile cord is very close to the outside diameter of a standard depth sheave which means that the diameter through which the pitch line passes is nearly identical to the outside sheave diameter for most belts. The use of new higher strength tensile members permitted the move from multiple-ply type tensile member belts to high performance single cord construction which combined with upgraded belt components and production techniques, greatly improved V-belt performance over the years. In some cases a modern V-belt can transmit up to 40% more horsepower than original classical V-belts. This gain in capacity is due in part to the shift of the center of the tensile cord line to a higher position in the V-belt. In current V-belt constructions the tensile cord transmits greater torque (due to its higher position in the belt with respect to older multiple-ply type tensile member construction) and as a consequence has more undercord support and power transmission capability.

The formulas below are to be used in current drive design. All formulas remain the same, but different values must be used for some calculations as shown below.

To Obtain:	Past Method:	New Method
Belt Length	Pitch Diameter	Datum Diameter
Center Distance	Pitch Diameter and Pitch Length	Datum Diameter and Datum Length
Belt Speed	Pitch Diameter	Pitch Diameter
Horsepower	Pitch Diameter	Pitch Diameter
Rim Speed	Outside Diameter	Outside Diameter
Speed Ratio	Pitch Diameter	Pitch Diameter
Arc of Contact Correction Factor	Pitch or Outside Diameters	Datum, Pitch or Outside Diameters
Span Length	Pitch or Outside Diameters	Datum, Pitch or Outside Diameters

Note: The information included in this segment involves only classical V-belts and sheaves.

THE ‘DATUM’ SYSTEM

Relationship of Datum Diameter/Pitch Diameter/Outside Diameter

Belt Cross Section	Datum Diameter Range (previously Pitch Diameter)	(2hd) Datum Diameter to Outside Diameter (A)	(2ap) Pitch Diameter to Outside Diameter (B)
A, AP, AX	ALL	0.250	0.00
B, BP, BX	ALL	0.350	0.00
A, AP, AX*	< = 7.4**	0.634	0.37
	> 7.4**	0.602	0.37
B, BP, BX*	< = 7.4**	0.333	0.01
	> 7.4**	0.334	0.01
C, CP, CX	ALL	0.400	0.00
DP, DX	ALL	0.600	0.00

*Using A/B Combination Sheaves
**Datum Diameter does not exist for A or B belts in combination grooves.
Diameters shown for combination grooves are outside diameters.

FORMULAS AND EXAMPLES

Outside Diameter = Datum Diameter + A
Pitch Diameter = Outside Diameter - B

Pitch System with multiple-ply type tensile member construction belts (old)

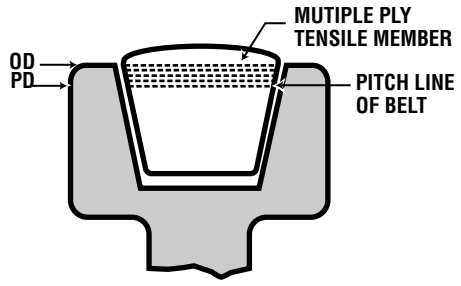

Pitch diameter is equal to pitch line of belt

Pitch System with Modern V-belt Construction (new)

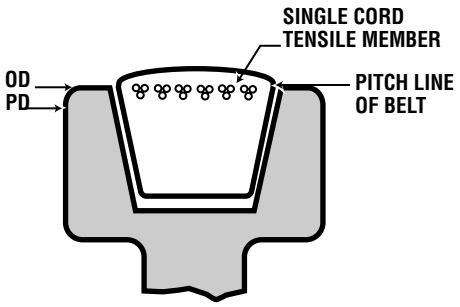

Pitch diameter not equal to pitch line of belt

DATUM DIAMETER SYSTEM

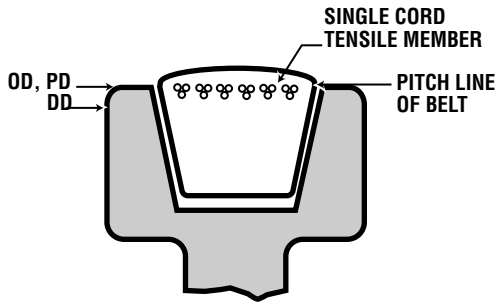

Pitch diameter is equal to pitch line of belt

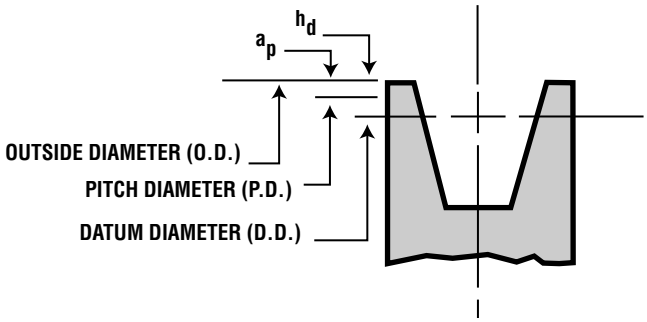

Relationship of D.D. — P.D. — O.D.

QD MULTIPLE SHEAVES

CLASSICAL QD SHEAVES

Standard Groove Dimensions for Classical QD Sheaves

Cross Section		Datum Diameter Range	α Groove Angle ± 0.33°	b_d Ref	b_g	h_g Min	$2h_d$ Ref	R_B Min	d_b ± 0.0005	S_g ± 0.025	S_e	Minimum Recommended Datum Diameter	$2s_F$
A, AX		Up thru 5.4 Over 5.4	34 38	0.418	0.494 0.504 ± 0.005	0.460	0.250	0.148 0.149	0.4375 (7/16)	0.625	0.375 +0.090 -0.062	A 3.0 AX 2.2	0
B, BX		Up thru 7.0 Over 7.0	34 38	0.530	0.637 0.650 ± 0.006	0.550	0.350	0.189 0.190	0.5625 (9/16)	0.750	0.500 +0.120 -0.065	B 5.4 BX 4.0	0
A, AX &B, BX Combin	A, AX Belt	Up thru 7.4 (1) Over 7.4	34 38	(2) 0.508	0.612 0.625 ± 0.006	0.612	0.634 (3) 0.602	0.230 0.226	0.5625 (9/16)	0.750	0.500 +0.120 -0.065	A 3.6 (1)	0.37
	B, BX Belt	Up thru 7.4 (1) Over 7.4	34 38		0.612 0.625 ± 0.006		0.333 (3) 0.334	0.230 0.226				B 5.7 (1) BX 4.3	-0.01
C, CX		Up thru 7.99 Over 7.99 to 36 and incl. 12.0	34	0.879 0.757 0.887 ± 0.007				0.274	0.276 (25/32)	0.7812	1000 0.688	+0.160 CX 6.8	C 9.0
D		Over 12.0 Up thru 12.99 Over 12.99 to and incl. 17.0	38 34 36	1.076	0.895 1.259 1.271 ± 0.008			0.277 0.410 0.410	1.1250 (1 1/8)	1.438	-0.070 0.875 +0.220	13.0	0

(1) Diameters shown for combination grooves are outside diameters. A specific datum diameter does not exist for either A or B belts in combination grooves.
The b_d value shown for combination grooves is the "constant width" point but does not represent a datum width for either A or B belts ($2h_d$ = 0.340 reference).
$2h_d$ values for combination grooves are calculated based on b_d for A and B grooves.

Deep Groove Dimensions for Classical QD Sheaves

Cross Section	Datum Diameter Range	α Groove Angle 0.33°	b_d Ref	b_g	h_g Min	$2h_d$ Ref	R_B Min	d_b 0.0005	S_g 0.025	S_e	Minimum Recommended Datum Diameter	$2s_F$
B, BX	Up thru 7.0 Over 7.0	34 38	0.530	0.747 0.774 ± 0.006	0.730	0.710	0.007 0.008	0.5625 (9/16)	0.875	0.562 +0.120 -0.065	B 5.4 BX 4.0	0.36
C, CX	Up thru 7.99 Over 7.99 to 36 and incl. 12.0	34	0.61	1.066 0.757 1.085 ± 0.007		1.055	-0.035 1.010	-0.032 (25/32)	0.7812	1.250 +0.160 0.812 -0.070	CX 6.8	C 9.0
D	Over 12.0 Up thru 12.99 Over 12.99 to and incl. 17.0	38 34 36	1.076	1.105 1.513 1.541 ± 0.008	1.435	1.430	-0.031 -0.010 -0.009	1.1250 (1 1/8)	1.750	1.062 +0.220 -0.080	13.0	0.83

(1) The A/AX combination groove should be used when deep grooves are required for A or AX belts.
Summation of the deviations from "S_g" for all grooves in any one sheave shall not exceed ±0.050 inches.
The variation in Datum Diameter between the grooves in any one sheave must be within the following limits:
Up through 19.9 inches outside diameter and up through 6 grooves: 0.010 inches (add 0.0005 in. for each additional groove.)

20.0 inches and over on outside diameter and up through 10 grooves: 0.015 inches (add 0.0005 inches for each additional groove).

This variation can be obtained easily by measuring the distance across two measuring balls or rods placed diametrically opposite each other in a groove. Comparing this "diameter over balls or rods" measurement between grooves will give the variation in datum diameter.

Deep groove sheaves are intended for drives with belt offset such as quarter-turn or vertical shaft drives. (See RMP Power Transmission Belt Technical Information Bulletin IP-3-10, V-Belt Drives with Twist.)

Joined belts will not operate in deep groove sheaves.

Also, A and AX Joined belts will not operate in A/AX and B/BX combination grooves.

QD MULTIPLE SHEAVES
CLASSICAL QD SHEAVES

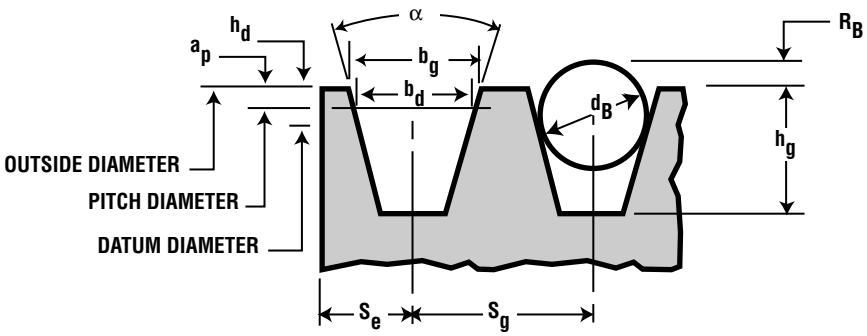

Groove Dimensions

OTHER SHEAVE TOLERANCES

Outside Diameter Up Thru 8.0 inches. Outside Diameter ± 0.020 inches For each additional inch of outside diameter add ± 0.0005 inches.	**Radial Runout**** Up Thru 10.0 inches. For each additional inch of outside diameter add 0.0005 inches	**Axial Runout**** Up Thru 5.0 inches. Outside Diameter 0.005 inches For each additional inch of outside diameter add 0.001 inches	**Face Width of Standard and Deep Groove Sheaves** Face Width = S_g (N_g-1) + 2S_e Where: N_g = Number of Grooves

**Total Indicator Reading

Machined Surface Area	Maximum Surface Roughness height, R_a (Arithmetic Avg.) (Microinches)
Sheave Groove Sidewalls	125
Sheave O.D.'s and Rim Edges	250
Rim I.D.'s Hub Ends. Hub O.D.'s	As Cast
Straight Bores and Taper Bores	125

CARLISLE POLY-RIB SHEAVES

Stock Sizes

Poly-Rib Sheaves are listed for “J” cross section drives utilizing both QD and fixed bore hubs. Sheave grooves are precision made for perfect mating with the belt ribs. They provide equal distribution of loads across full width of sheave and are given a very close static balance.

FOR USE WITH:
CARLISLE POLY-RIB
(J)

J SECTION

6 Grooves Face Width(F)=23/32″ Fixed Bore, 11/16″ Bushed				
Part No.	Pitch Diameter	Bushing	Stock Bores	Weight (lbs) less bush.
6J15	1.50	—	1/2, 5/8, 3/4, 1	0.45
6J16	1.60	—	1/2, 5/8, 3/4	0.55
6J17	1.70	—	1/2	0.60
6J18	1.80	—	1/2, 5/8, 3/4	0.65
6J19	1.90	—	1/2, 5/8, 3/4, 1	0.70
6J20	2.00	JA		0.6
6J21	2.12	JA		0.7
6J22	2.24	JA		0.4
6J23	2.36	JA		0.5
6J25	2.50	JA		0.5
6J26	2.65	JA		0.6
6J28	2.80	JA		0.7
6J30	3.00	JA		0.9
6J31	3.15	JA		1.0
6J33	3.35	JA		1.1
6J45	4.50	SH		2.7
6J60	6.00	SH		3.5
6J80	8.00	SH		3.7
6J106	10.60	SH		6.1
6J140	14.00	SK		12.9
6J190	19.00	SK		21.0

10 Grooves Face Width(F)=1-3/32″			
Part No.	Pitch Diameter	Bushing	Weight (lbs) less bush.
10J20	2.00	JA	0.7
10J21	2.12	JA	0.9
10J22	2.24	JA	0.7
10J23	2.36	JA	0.7
10J25	2.50	JA	0.7
10J26	2.65	JA	1.0
10J28	2.80	JA	0.8
10J30	3.00	JA	1.4
10J31	3.15	JA	1.2
10J33	3.35	SH	1.3
10J45	4.50	SH	2.7
10J60	6.00	SH	3.4
10J80	8.00	SH	4.2
10J106	10.60	SK	11.0
10J140	14.00	SH	16.7
10J190	19.00	SK	23.8
16 Grooves Face Width(F)=2-1/32″			
16J25	2.50	JA	1.1
16J26	2.65	JA	1.0
16J28	2.80	JA	1.1
16J30	3.00	SH	1.8
16J31	3.15	SH	1.9
16J33	3.35	SH	1.6
16J45	4.50	SH	3.2
16J60	6.00	SH	3.8
16J80	8.00	SK	9.7

QD MULTIPLE SHEAVES
POLY-RIB SHEAVES

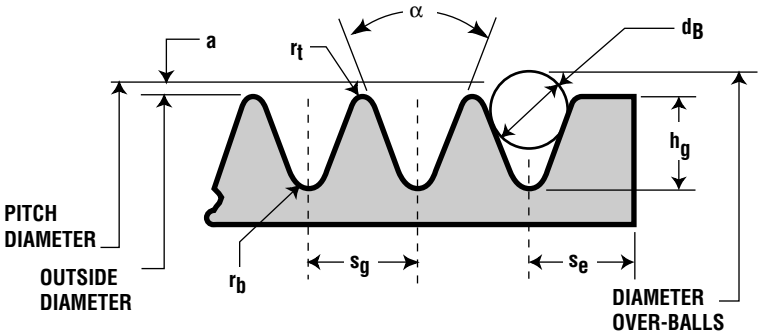

Standard Groove Dimensions

GROOVE DIMENSIONS - INCHES

Cross Section	Minimum Recommended Outside Diameter	α Groove Angle ± 0.25 Degrees	S_g*	r_t +0.005 -0.00	2a	r_b	h_g Minimum	d_B ±0.0005	S_e
J	0.80	40	0.092 ±0.001	0.008	0.030	0.015 +0.00 -0.005	0.071	0.0625	0.125 +0.030 -0.015
L	3.00	40	0.185 ±0.002	0.015	0.058	0.015 +0.00 -0.005	0.183	0.1406	0.375 +0.075 -0.030
M	7.00	40	0.370 ±0.003	0.030	0.166	0.030 +0.00 -0.010	0.377	0.2812	0.500 +0.100 -0.040

*Summation of the deviations from "S_g" for all grooves in any one sheave shall not exceed ± 0.010 inches.

The variations in pitch diameter between the grooves in any one sheave must be within the following limits:

Up through 2.9 inches outside diameter and up through 6 grooves (Add 0.0001 inches for each additional groove)	0.002 inches
Over 2.9 inches outside diameter to and including 19.9 inches and up through 10 grooves (Add 0.002 for each additional groove)	0.005 inches
Over 19.9 inches and up through 10 grooves (add 0.0005 for each additional groove)	0.010 inches

This variation can be easily obtained by measuring the distance across two measuring balls or rods placed in the grooves diametrically opposite each other. Comparing this "diameter-over-balls-or-rods" measurement between grooves will give the variation in pitch diameter.

OTHER SHEAVE TOLERANCES

Outside Diameter	**Radial Runout****	**Axial Runout****	**Face Width of Standard and Deep Groove Sheaves**
Up through 2.9 inches outside diameter ±0.010 inches Over 2.9 inches to and including 8.0 inches outside diameter ±0.020 inches For each additional inch of outside diameter over 8 inches, add ±0.0025 inches	Up through 2.9 inches outside diameter 0.005 inches Over 2.9 inches to and including 10.0 inches outside diameter 0.010 inches For each additional inch of outside diameter over 10.0 inches, add 0.0005 inches	0.001 inches per inch of outside diameter	Face Width = S_g (n_g-1) + 2S_e Where: N_g = Number of Grooves

**Total Indicator Reading

CARLISLE DURAPOWER FHP
LIGHT DUTY SHEAVES
BUSHED TYPE

- *CAPACITIES TO 15 HP*
- *BORE SIZES FROM 1/2 to 1-1/2 INCHES*
- *EASY-MOUNT SURE-GRIP QUICK-DETACHABLE BUSHINGS*
- *EFFICIENT, ECONOMICAL, LIGHTWEIGHT*

Carlisle's line of light-duty Durapower FHP V-belt sheaves can be equipped with *QD® (quick-detachable) bushings. Capacities range from fractional to 15 hp. Pitch diameter range is from 2.4 to 18.4 in.

The new Durapower FHP sheaves are available in two types, both with one and two grooves. “A” sheaves are made to accommodate 0 (3L) & A (4L) belts; “B” sheaves are made for A (4L) or B (5L) belts. The two lines of sheaves have identical pitch diameters when using A or 4L belts.

Carlisle's light-duty sheaves can be equipped with Carlisle's “QT” bushings. This quick-detachable tapered bushing is split through flange and tapered surface to provide a true clamp that is comparable to a shrink fit.

Carlisle bushings are easy to install and remove. The flange has two drilled and two tapered holes for easy assembly with two capscrews. Bore range is 1/2 through 1-1/2 in.

PITCH DIA.	DATUM DIA.		SINGLE-GROOVE							TWO-GROOVE						
0 (3L)	A (4L) Belts	O.D. ◆	PART NO.	TYPE	DIMENSIONS E	F	L	M	Wt. (lbs.)	PART NO.	TYPE	DIMENSIONS E	F	L	M	Wt. (lbs.)
2.46	2.8	3.0	**AK30QT**	E1	3/8	3/4	1-1/4	7/8	1.7	**2AK30QT**	E1	1	1-3/8	1-1/4	7/8	2.0
2.66	3.0	3.2	**AK32QT**	E1	3/8	3/4	1-1/4	7/8	1.8	**2AK32QT**	E1	1	1-3/8	1-1/4	7/8	2.3
2.86	3.2	3.4	**AK34QT**	E1	3/8	3/4	1-1/4	7/8	1.8	**2AK34QT**	E1	9/16	1-3/8	1-1/4	7/16	2.0
3.16	3.5	3.7	**AK39QT**	C2	1/16	3/4	1-1/4	9/16	2.0	**2AK39QT**	E1	9/16	1-3/8	1-1/4	7/16	2.4
3.36	3.7	3.9	**AK41QT**	C2	1/16	3/4	1-1/4	9/16	2.2	**2AK41QT**	A2	1/16	1-3/8	1-1/4	1/16	2.5
3.66	4.0	4.2	**AK44QT**	C2	1/16	3/4	1-1/4	9/16	2.5	**2AK44QT**	A2	1/16	1-3/8	1-1/4	1/16	3.0
3.86	4.2	4.4	**AK46QT**	C2	1/16	3/4	1-1/4	9/16	2.5	**2AK46QT**	A2	1/16	1-3/8	1-1/4	1/16	3.1
4.16	4.5	4.7	**AK49QT**	C2	1/16	3/4	1-1/4	9/16	2.6	**2AK49QT**	A2	1/16	1-3/8	1-1/4	1/16	3.6
4.36	4.7	4.9	**AK51QT**	C2	1/16	3/4	1-1/4	9/16	2.9	**2AK51QT**	A2	1/16	1-3/8	1-1/4	1/16	3.8
4.66	5.0	5.2	**AK54QT**	C2	1/16	3/4	1-1/4	9/16	2.6	**2AK54QT**	A2	1/16	1-3/8	1-1/4	1/16	4.0
4.86	5.2	5.4	**AK56QT**	C2	1/16	3/4	1-1/4	9/16	2.9	**2AK56QT**	A2	1/16	1-3/8	1-1/4	1/16	4.2
5.16	5.5	5.7	**AK59QT**	C2	1/16	3/4	1-1/4	9/16	3.0	**2AK59QT**	D3	1/16	1-3/8	1-1/4	1/16	4.0
5.36	5.7	5.9	**AK61QT**	D3	1/16	3/4	1-1/4	9/16	3.1	**2AK61QT**	D3	1/16	1-3/8	1-1/4	1/16	3.9
5.66	6.0	6.2	**AK64QT**	D3	1/16	3/4	1-1/4	9/16	3.3	**2AK64QT**	D3	1/16	1-3/8	1-1/4	1/16	4.5
5.86	6.2	6.4	**AK66QT**	D3	1/16	3/4	1-1/4	9/16	3.4	—	—	—	—	—	—	—
6.16	6.5	6.7	**AK69QT**	D3	1/16	3/4	1-1/4	9/16	3.8	—	—	—	—	—	—	—
6.36	6.7	6.9	**AK71QT**	D3	1/16	3/4	1-1/4	9/16	3.7	—	—	—	—	—	—	—
6.66	7.0	7.2	**AK74QT**	D3	1/16	3/4	1-1/4	9/16	3.9	**2AK74QT**	D3	1/16	1-3/8	1-1/4	1/16	5.5
7.16	7.5	7.7	**AK79QT**	D3	1/16	3/4	1-1/4	9/16	4.1	—	—	—	—	—	—	—
7.66	8.0	8.2	**AK84QT**	D3	1/16	3/4	1-1/4	9/16	4.2	**2AK84QT**	D3	1/16	1-3/8	1-1/4	1/16	6.4
8.16	8.5	8.7	**AK89QT**	D3	1/16	3/4	1-1/4	9/16	4.6	—	—	—	—	—	—	—
8.66	9.0	9.2	**AK94QT**	D3	1/16	3/4	1-1/4	9/16	5.0	**2AK94QT**	D3	1/16	1-3/8	1-1/4	1/16	6.7
9.16	9.5	9.7	**AK99QT**	D3	1/16	3/4	1-1/4	9/16	5.0	—	—	—	—	—	—	—
9.66	10.0	10.2	**AK104QT**	D3	1/16	3/4	1-1/4	9/16	5.1	**2AK104QT**	D3	1/16	1-3/8	1-1/4	1/16	8.3
10.16	10.5	10.7	**AK109QT**	D3	1/16	3/4	1-1/4	9/16	5.7	—	—	—	—	—	—	—
10.66	11.0	11.2	**AK114QT**	D3	1/16	3/4	1-1/4	9/16	6.1	**2AK114QT**	D3	1/16	1-3/8	1-1/4	1/16	9.1
11.66	12.0	12.2	**AK124QT**	D3	1/16	3/4	1-1/4	9/16	6.7	**2AK124QT**	D3	1/16	1-3/8	1-1/4	1/16	10.1
12.66	13.0	13.2	**AK134QT**	D3	1/16	3/4	1-1/4	9/16	8.0	**2AK134QT**	D3	1/16	1-3/8	1-1/4	1/16	12.0
13.66	14.0	14.2	**AK144QT**	D3	1/16	3/4	1-1/4	9/16	8.4	**2AK144QT**	D3	1/16	1-3/8	1-1/4	1/16	12.5
14.66	15.0	15.2	**AK154QT**	D3	1/16	3/4	1-1/4	9/16	9.4	**2AK154QT**	D3	1/16	1-3/8	1-1/4	1/16	13.9
17.66	18.0	18.2	**AK184QT**	D3	1/16	3/4	1-1/4	9/16	11.9	**2AK184QT**	D3	1/16	1-3/8	1-1/4	1/16	17.4

Weights for all bushed items are approximate and include the bushing.
Dimensions are for reference only.
◆ P.D. same as O.D.
* QD is a registered Trademark - Emerson Electric

CARLISLE DURAPOWER FHP
LIGHT DUTY SHEAVES *(cont.)*

DATUM DIA.		O.D.	SINGLE-GROOVE							TWO-GROOVE						
A (4L) Belts	B (5L) Belts	◆	PART NO.	TYPE	DIMENSIONS E	F	L	M	Wt. (lbs.)	PART NO.	TYPE	DIMENSIONS E	F	L	M	Wt. (lbs.)
2.4	2.8	3.1	**BK30QT**	E1	1/2	7/8	1-1/4	7/8	1.8	—	—	—	—	—	—	—
2.6	3.0	3.3	**BK32QT**	E1	1/2	7/8	1-1/4	7/8	2.0	**2BK32QT**	E1	1-3/8	1-3/4	1-1/4	7/8	2.6
2.8	3.2	3.5	**BK34QT**	E1	1/2	7/8	1-1/4	7/8	2.2	**2BK34QT**	E1	1-3/8	1-3/4	1-1/4	7/8	3.0
3.0	3.4	3.7	**BK36QT**	C2	1/16	7/8	1-1/4	7/16	1.6	**2BK36QT**	E1	15/16	1-3/4	1-1/4	7/16	2.6
3.2	3.6	3.9	**BK40QT**	C2	1/16	7/8	1-1/4	7/16	2.0	**2BK40QT**	E1	15/16	1-3/4	1-1/4	7/16	3.0
3.5	3.9	4.2	**BK45QT**	C2	1/16	7/8	1-1/4	7/16	2.4	**2BK45QT**	E1	15/16	1-3/4	1-1/4	7/16	3.6
3.7	4.1	4.4	**BK47QT**	C2	1/16	7/8	1-1/4	7/16	2.8	**2BK47QT**	A2	1/16	1-3/4	1-1/4	7/16	3.4
4.0	4.4	4.7	**BK50QT**	C2	1/16	7/8	1-1/4	7/16	2.6	**2BK50QT**	A2	1/16	1-3/4	1-1/4	7/16	3.9
4.2	4.6	4.9	**BK52QT**	C2	1/16	7/8	1-1/4	7/16	2.7	**2BK52QT**	A2	1/16	1-3/4	1-1/4	7/16	4.2
4.5	4.9	5.2	**BK55QT**	C2	1/16	7/8	1-1/4	7/16	3.2	**2BK55QT**	A2	1/16	1-3/4	1-1/4	7/16	4.5
4.7	5.1	5.4	**BK57QT**	D3	1/16	7/8	1-1/4	7/16	3.3	**2BK57QT**	A2	1/16	1-3/4	1-1/4	7/16	4.9
5.0	5.4	5.7	**BK60QT**	D3	1/16	7/8	1-1/4	7/16	3.1	**2BK60QT**	A2	1/16	1-3/4	1-1/4	7/16	5.0
5.2	5.6	5.9	**BK62QT**	D3	1/16	7/8	1-1/4	7/16	3.2	**2BK62QT**	A2	1/16	1-3/4	1-1/4	7/16	5.1
5.5	5.9	6.2	**BK65QT**	D3	1/16	7/8	1-1/4	7/16	3.4	**2BK65QT**	D3	5/16	1-3/4	1-1/4	3/16	5.1
5.7	6.1	6.4	**BK67QT**	D3	1/16	7/8	1-1/4	7/16	3.5	**2BK67QT**	D3	5/16	1-3/4	1-1/4	3/16	5.6
6.0	6.4	6.7	**BK70QT**	D3	1/8	7/8	1-1/4	1/2	3.4	**2BK70QT**	D3	1/16	1-3/4	1-1/4	7/16	5.7
6.2	6.6	6.9	**BK72QT**	D3	1/8	7/8	1-1/4	1/2	3.7	**2BK72QT**	D3	5/16	1-3/4	1-1/4	3/16	6.0
6.5	6.9	7.2	**BK75QT**	D3	1/8	7/8	1-1/4	1/2	3.9	—	—	—	—	—	—	—
6.7	7.1	7.4	**BK77QT**	D3	1/8	7/8	1-1/4	1/2	4.4	—	—	—	—	—	—	—
7.0	7.4	7.7	**BK80QT**	D3	1/8	7/8	1-1/4	1/2	4.0	**2BK80QT**	D3	5/16	1-3/4	1-1/4	3/16	7.0
7.5	7.9	8.2	**BK85QT**	D3	1/8	7/8	1-1/4	1/2	4.4	—	—	—	—	—	—	—
8.0	8.4	8.7	**BK90QT**	D3	1/8	7/8	1-1/4	1/2	4.9	**2BK90QT**	D3	1/16	1-3/4	1-1/4	7/16	8.2
8.5	8.9	9.2	**BK95QT**	D3	1/8	7/8	1-1/4	1/2	5.6	—	—	—	—	—	—	—
9.0	9.4	9.7	**BK100QT**	D3	1/8	7/8	1-1/4	1/2	5.8	**2BK100QT**	D3	5/16	1-3/4	1-1/4	3/16	9.0
9.5	9.9	10.2	**BK105QT**	D3	1/8	7/8	1-1/4	1/2	6.1	—	—	—	—	—	—	—
10.0	10.4	10.7	**BK110QT**	D3	1/8	7/8	1-1/4	1/2	6.6	**2BK110QT**	D3	1/16	1-3/4	1-1/4	7/16	9.9
10.5	10.9	11.2	**BK115QT**	D3	1/8	7/8	1-1/4	1/2	7.0	—	—	—	—	—	—	—
11.0	11.4	11.7	**BK120QT**	D3	1/8	7/8	1-1/4	1/2	7.5	**2BK120QT**	D3	1/16	1-3/4	1-1/4	7/16	11.6
12.0	12.4	12.7	**BK130QT**	D3	1/8	7/8	1-1/4	1/2	7.5	**2BK130QT**	D3	1/16	1-3/4	1-1/4	7/16	13.7
13.0	13.4	13.7	**BK140QT**	D3	1/8	7/8	1-1/4	1/2	9.1	**2BK140QT**	D3	1/16	1-3/4	1-1/4	7/16	15.4
14.0	14.4	14.7	**BK150QT**	D3	1/8	7/8	1-1/4	1/2	10.1	—	—	—	—	—	—	—
15.0	15.4	15.7	**BK160QT**	D3	1/8	7/8	1-1/4	1/2	10.4	**2BK160QT**	D3	1/16	1-3/4	1-1/4	7/16	18.1
18.0	18.4	18.7	**BK190QT**	D3	1/8	7/8	1-1/4	1/2	13.4	**2BK190QT**	D3	1/16	1-3/4	1-1/4	7/16	22.1

Weights for all bushed items are approximate and include the bushing.
Dimensions are for reference only.

◆ P.D. for A belts = Datum Dia. + .38
P.D. for B belts = Datum Dia. + .36

QT BUSHINGS

Item I.D. No.	Bore	Key Seat	Wt. (*)	Item I.D. No.	Bore	Key Seat	Wt. (*)	Item I.D. No.	Bore	Key Seat	Wt. (*)
QTMPB	7/16	No KS	.6	**QT13/16**	13/16	3/16 X 3/32	.6	**QT1316**	1-3/16	1/4 X 1/8	.6
QT12	1/2	1/8 X 1/16	.6	**QT78**	7/8	3/16 X 3/32	.6	**QT1114**	1-1/4	1/4 X 1/8	.6
QT9/16	9/16	1/8 X 1/16	.6	**QT15/16**	15/16	1/4 X 1/8	.6	**QT1516**	1-5/16	5/16X 1/16	.6
QT58	5/8	3/16 X 3/32	.6	**QT1**	1	1/4 X 1/8	.6	**QT138**	1-3/8	5/16X 1/16	.6
QT-11/16	11/16	3/16 X 3/32	.6	**QT1116**	1-1/16	1/4 X 1/8	.6	**QT1716**	1-7/16	3/8 X 1/16	.6
QT34	3/4	3/16 X 3/32	.6	**QT118**	1-1/8	1/4 X 1/8	.6	**QT112**	1-1/2	3/8 X 1/16	.6

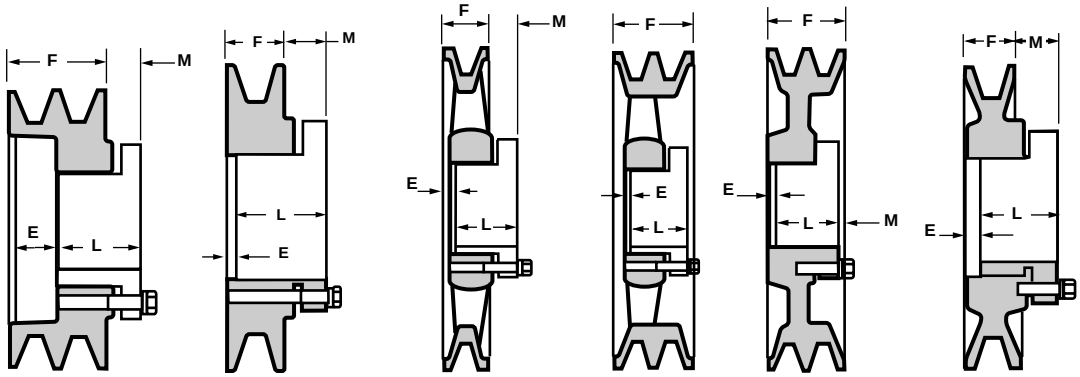

TYPE E1 (two-groove) | TYPE E1 (single-groove) | TYPE D3 (single-groove) | TYPE D3 (two-groove) | TYPE A2 (two-groove) | TYPE C2 (single-groove)

CARLISLE DURAPOWER FHP

SINGLE GROOVE
BORED-TO-SIZE SHEAVES

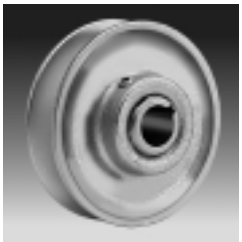

- *RUGGED CAST IRON CONSTRUCTION*
- *POPULAR BORE SIZES IN STOCK*
- *MEETS INDUSTRY STANDARDS*
- *EFFICIENT, ECONOMICAL and LIGHTWEIGHT*

Carlisle's line of Light Duty (FHP) Bored-to-Size sheaves are available in one and two groove configurations for 3L, 4L (A) and 5L (B) belts. Made of high-strength cast iron, they combine maximum strength, precision balance and smooth operation with an economical drive system.

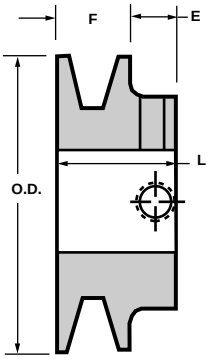

Type 1

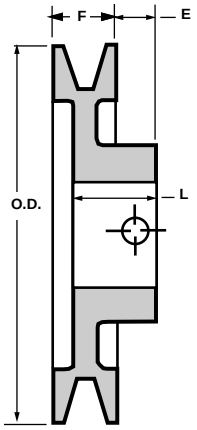

Type 2

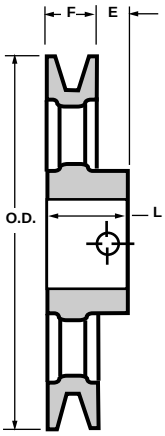

Type 3

DIMENSIONS (in inches)

Sheave No.	DATUM DIA. 3L (O)	DATUM DIA. 4L (A)	O.D. ◆	Stock Bores	Max. Bore	Type	Dimensions E	Dimensions F	Dimensions L	Wt. Lbs.
AK15	—	1.3	1.6	1/2, 5/8	5/8	1	7/16	11/16	1-1/8	0.3
AK17	—	1.5	1.8	1/2, 5/8, 3/4	3/4	1	7/16	11/16	1-1/8	0.5
AK19	—	1.7	2.0	1/2, 5/8, 3/4, 7/8	7/8	1	7/16	11/16	1-1/8	0.5
AK20	1.5	1.8	2.1	1/2, 5/8, 3/4	3/4	1	7/16	11/16	1-1/8	0.5
AK21	1.6	1.9	2.2	1/2, 5/8, 3/4	3/4	1	7/16	11/16	1-1/8	0.7
AK22	1.7	2.0	2.3	1/2, 5/8, 3/4, 7/8, 1	1	1	7/16	11/16	1-1/8	0.8
AK23	1.8	2.1	2.4	1/2, 5/8, 3/4	3/4	1	7/16	11/16	1-1/8	0.8
AK24	1.9	2.2	2.5	1/2, 5/8, 3/4, 7/8, 1	1	1	7/16	11/16	1-1/8	0.9
AK25	2.0	2.3	2.6	1/2, 5/8, 3/4, 7/8	7/8	1	7/16	11/16	1-1/8	0.9
AK26	2.1	2.4	2.7	1/2, 5/8, 3/4, 7/8	7/8	1	7/16	11/16	1-1/8	1.0
AK27	2.2	2.5	2.8	1/2, 5/8, 3/4, 7/8, 1	1	1	7/16	11/16	1-1/8	1.0
AK28	2.3	2.6	2.9	1/2, 5/8, 3/4, 7/8	7/8	1	7/16	11/16	1-1/8	1.1
AK30	2.5	2.8	3.1	1/2, 5/8, 3/4, 7/8, 1	1	1	7/16	11/16	1-1/8	1.2
AK32	2.7	3.0	3.3	1/2, 5/8, 3/4, 7/8, 15/16, 1	1	1	7/16	11/16	1-1/8	1.4
AK34	2.9	3.2	3.5	1/2, 5/8, 3/4, 7/8, 1, 1-1/8	1-1/8	—	7/16	11/16	1-1/8	1.6
AK39	3.2	3.5	3.8	1/2, 5/8, 3/4, 7/8, 1, 1-1/8	1-1/8	1	7/16	11/16	1-1/8	2.0
AK41	3.4	3.7	4.0	1/2, 5/8, 3/4, 7/8, 1, 1-1/8	1-1/8	1	7/16	11/16	1-1/8	2.0
AK44	3.7	4.0	4.3	1/2, 5/8, 3/4, 7/8, 1, 1-1/8	1-1/8	2	7/16	11/16	29/32	1.8
AK46	3.9	4.2	4.5	1/2, 5/8, 3/4, 7/8, 1, 1-1/8	1-1/8	2	7/16	11/16	29/32	1.9
AK49	4.2	4.5	4.8	1/2, 5/8, 3/4, 7/8, 1, 1-1/8	1-1/8	2	7/16	11/16	29/32	1.9
AK51	4.4	4.7	5.0	1/2, 5/8, 3/4, 7/8, 1, 1-1/8	1-1/8	2	7/16	11/16	29/32	2.8
AK54	4.7	5.0	5.3	1/2, 5/8, 3/4, 7/8, 15/16, 1-3/16	1-3/16	3	7/16	11/16	1-1/8	2.4
AK56	4.9	5.2	5.5	1/2, 5/8, 3/4, 7/8, 1, 1-1/8, 1-3/16	1-3/16	3	7/16	11/16	1-1/8	2.4
AK59	5.2	5.5	5.8	1/2, 5/8, 3/4, 7/8, 1	1	3	7/16	11/16	1-1/8	2.6
AK61	5.4	5.7	6.0	1/2, 5/8, 3/4, 7/8, 1, 1-1/8, 1-3/16	1-3/16	3	7/16	11/16	1-1/8	2.8
AK64	5.7	6.0	6.3	1/2, 5/8, 3/4, 1	1	3	7/16	11/16	1-1/8	2.9
AK66	5.9	6.2	6.5	1/2, 5/8, 3/4, 7/8, 1, 1-1/8, 1- 3/16	1-3/16	3	7/16	11/16	1-1/8	3.0
AK69	6.2	6.5	6.8	1/2, 5/8, 3/4, 1	1	3	7/16	11/16	1-1/8	3.1
AK71	6.4	6.7	7.0	1/2, 5/8, 3/4, 7/8, 1, 1-1/8, 1-3/16, 1-1/4	1-1/4	3	7/16	11/16	1-1/8	3.1
AK74	6.7	7.0	7.3	3/4, 1	1	3	7/16	11/16	1-1/8	3.0
AK79	7.2	7.5	7.8	3/4, 1	1	3	7/16	11/16	1-1/8	3.5
AK81	7.4	7.7	8.0	1/2, 5/8, 3/4, 7/8, 1, 1-1/8, 1-3/16, 1-1/4	1-1/4	3	7/16	11/16	1-1/8	4.0
AK84	7.7	8.0	8.3	3/4, 1	1	3	7/16	11/16	1-1/8	4.3
AK89	8.2	8.5	8.8	5/8, 3/4, 1	1	3	7/16	11/16	1-1/8	4.6
AK91	8.4	8.7	9.0	1/2, 5/8, 3/4, 7/8, 1, 1-1/8, 1-3/16, 1-1/4	1-1/4	3	7/16	11/16	1-1/8	4.8
AK94	8.7	9.0	9.3	3/4, 1	1	3	7/16	11/16	1-1/8	5.0
AK99	9.2	9.5	9.8	5/8, 3/4, 1	1	3	7/16	11/16	1-1/8	5.2
AK104	9.7	10.0	10.3	5/8, 3/4	3/4	3	7/16	11/16	1-1/8	5.6
AK109	10.2	10.5	10.8	3/4, 1, 1-1/8	1-1/8	3	7/16	11/16	1-1/8	6.0
AK114	10.7	11.0	11.3	3/4, 1, 1-1/8	1-1/8	3	7/16	11/16	1-1/8	6.9
AK124	11.7	12.0	12.3	5/8, 3/4, 1, 1-3/16	1-3/16	3	7/16	11/16	1-1/8	7.9
AK134	12.7	13.0	13.3	3/4, 7/8, 1	1	3	7/16	11/16	1-1/8	8.9
AK141	13.4	13.7	14.0	5/8, 3/4, 1, 1-1/8, 1-3/16	1-3/16	3	7/16	11/16	1-1/8	9.9
AK144	13.7	14.0	14.3	3/4, 1, 1-1/8	1-1/8	3	7/16	11/16	1-1/8	10.9
AK154	14.7	15.0	15.3	3/4, 1, 1-1/8	1-1/8	3	7/16	11/16	1-1/8	11.5
AK184	17.7	18.0	18.3	3/4, 1	1	3	7/16	11/16	1-1/8	13.5

◆ P.D. for A same as O.D.
Dimensions are for reference only.

Note: Sheaves with 1" bores and larger are furnished with two 5/16" setscrews.

Sheaves with bores smaller than 1" are furnished with one 5/16" setscrew.

STANDARD KEYSEAT DIMENSIONS

Shaft Dia.	Width	Depth
1/2	No Keyseat	
5/8, 7/8	3/16	3/32
1-5/16, 1-1/4	1/4	1/8
1-5/16, 1-3/8	5/16	5/32
1-7/16, 1-3/4	3/8	3/16

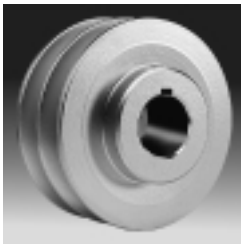

CARLISLE DURAPOWER FHP

TWO GROOVE FHP
BORED-TO-SIZE SHEAVES

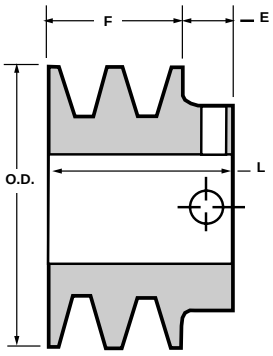

Type 1A

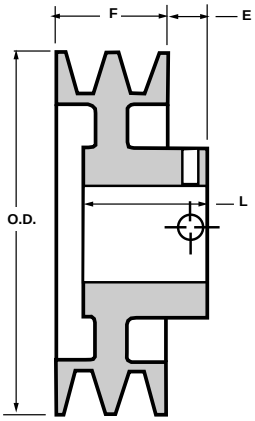

Type 2A

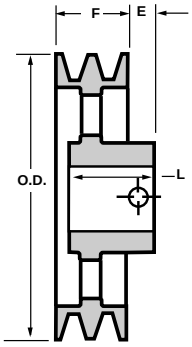

Type 3A

DIMENSIONS (in inches)

Sheave No.	DATUM DIA. 3L (O)	DATUM DIA. 4L (A)	O.D. ◆	Stock Bores	Max. Bore	Type	Dimensions E	Dimensions F	Dimensions L	Wt. Lbs.
2AK20	1.5	1.8	2.1	5/8, 7/8	7/8	1A	1/2	1-5/16	1-13/16	0.9
2AK21	1.6	1.9	2.2	1/2, 5/8, 3/4, 7/8	7/8	1A	1/2	1-5/16	1-13/16	1.1
2AK22	1.7	2.0	2.3	1/2, 5/8, 3/4, 7/8, 1	1	1A	1/2	1-5/16	1-13/16	1.2
2AK23	1.8	2.1	2.4	1/2, 5/8, 3/4, 7/8, 1	1	1A	1/2	1-5/16	1-13/16	1.3
2AK25	2.0	2.3	2.6	5/8, 3/4, 7/8, 1	1	1A	1/2	1-5/16	1-13/16	1.5
2AK26	2.1	2.4	2.7	1/2, 5/8, 3/4, 7/8, 1	1	1A	1/2	1-5/16	1-13/16	1.5
2AK27	2.2	2.5	2.8	1/2, 5/8, 3/4, 7/8, 1, 1-1/8	1-1/8	1A	1/2	1-5/16	1-13/16	1.8
2AK28	2.3	2.6	2.9	5/8, 7/8, 1	1	1A	1/2	1-5/16	1-13/16	2.0
2AK30	2.5	2.8	3.1	5/8, 3/4, 7/8, 1, 1-1/8	1-1/8	1A	1/2	1-5/16	1-13/16	2.2
2AK32	2.7	3.0	3.3	5/8, 3/4, 7/8, 1, 1-1/8	1-1/8	1A	1/2	1-5/16	1-13/16	2.4
2AK34	2.9	3.2	3.5	5/8, 3/4, 7/8, 1, 1-1/8	1-1/8	1A	1/2	1-5/16	1-13/16	2.7
2AK39	3.2	3.5	3.8	5/8, 3/4, 7/8, 1, 1-1/8	1-1/8	1A	1/2	1-5/16	1-13/16	3.2
2AK41	3.4	3.7	4.0	1/2, 5/8, 3/4, 7/8, 1, 1-1/8	1-1/8	1A	1/2	1-5/16	1-13/16	3.5
2AK44	3.7	4.0	4.3	5/8, 3/4, 7/8, 1, 1-1/8	1-1/8	1A	1/2	1-5/16	1-13/16	4.1
2AK46	3.9	4.2	4.5	1/2, 5/8, 3/4, 7/8, 1, 1-1/8	1-1/8	1A	1/2	1-5/16	1-13/16	4.6
2AK49	4.2	4.5	4.8	5/8, 3/4, 7/8, 1, 1-1/8	1-1/8	2A	1/2	1-5/16	1-1/2	2.7
2AK51	4.4	4.7	5.0	5/8, 3/4, 7/8, 1, 1-1/8	1-1/8	2A	1/2	1-5/16	1-1/2	2.9
2AK54	4.7	5.0	5.3	5/8, 3/4, 7/8, 1, 1-1/8	1-1/8	3A	1/2	1-5/16	1-11/32	3.2
2AK56	4.9	5.2	5.5	5/8, 3/4, 7/8, 1, 1-1/8	1-1/8	3A	1/2	1-5/16	1-11/32	3.3
2AK59	5.2	5.5	5.8	7/8, 1, 1-1/8	1-1/8	3A	1/2	1-5/16	1-1/2	3.4
2AK61	5.4	5.7	6.0	5/8, 3/4, 7/8, 1, 1-1/8	1-1/8	3A	1/2	1-5/16	1-1/2	3.6
2AK64	5.7	6.0	6.3	7/8, 1, 1-1/8	1-1/8	3A	1/2	1-5/16	1-1/2	4.5
2AK74	6.7	7.0	7.3	3/4, 7/8, 1	1	3A	1/2	1-5/16	1-1/2	5.8
2AK84	7.7	8.0	8.3	3/4, 7/8, 1	1	3A	1/2	1-5/16	1-1/2	6.9
2AK94	7.8	9.0	9.3	3/4, 7/8, 1	1	3A	1/2	1-5/16	1-1/2	7.7
2AK104	9.7	10.0	10.3	3/4, 1	1	3A	1/2	1-5/16	1-1/2	9.7
2AK114	10.7	11.0	11.3	1, 1-1/8	1-1/8	3A	1/2	1-5/16	1-1/2	10.2
2AK124	11.7	12.0	12.3	1, 1-1/8	1-1/8	3A	1/2	1-5/16	1-1/2	11.3
2AK134	12.7	13.0	13.3	1, 1-1/8	1-1/8	3A	1/2	1-5/16	1-1/2	12.4
2AK144	13.7	14.0	14.3	1, 1-3/16, 1-1/4	1-1/4	3A	1/2	1-5/16	1-1/2	13.2
2AK154	14.7	15.0	15.3	1, 1-3/16, 1-1/4	1-1/4	3A	1/2	1-5/16	1-5/8	13.7
2AK184	17.7	18.0	18.3	1, 1-3/8	1-3/8	3A	1/2	1-5/16	1-5/8	15.8

◆ P.D. for A same as O.D.

Dimensions are for reference only.

STANDARD KEYSEAT DIMENSIONS

Shaft Dia.	Width	Depth
1/2	No Keyseat	
5/8, 7/8	3/16	3/32
1-5/16, 1-1/4	1/4	1/8
1-5/16, 1-3/8	5/16	5/32
1-7/16, 1-3/4	3/8	3/16

Note: Sheaves with 1" bores and larger are furnished with two 5/16" setscrews.

Sheaves with bores smaller than 1" are furnished with one 5/16" setscrew.

CARLISLE DURAPOWER FHP

DIMENSIONS (in inches)

Sheave No.	DATUM DIA. 4L (A)	DATUM DIA. 5L (B)	O.D. ◆	Stock Bores	Max. Bore	Type	Dimensions E	Dimensions F	Dimensions L	Wt. Lbs.
BK19	1.3	1.7	1.9	1/2, 5/8, 3/4	3/4	1	7/16	7/8	1-5/16	0.7
BK22	1.6	2.0	2.2	1/2, 5/8, 3/4, 7/8, 1	1	1	7/16	7/8	1-5/16	0.9
BK23	1.7	2.1	2.3	1/2, 5/8, 3/4, 7/8, 1	1	1	7/16	7/8	1-5/16	0.9
BK24	1.8	2.2	2.4	1/2, 5/8, 3/4, 7/8, 1	1	1	7/16	7/8	1-5/16	0.9
BK25	1.9	2.3	2.5	1/2, 5/8, 3/4, 7/8, 1	1	1	7/16	7/8	1-5/16	1.1
BK26	2.0	2.4	2.8	1/2, 5/8, 3/4, 7/8, 1	1	1	7/16	7/8	1-5/16	1.2
BK27	2.1	2.5	2.9	1/2, 5/8, 3/4, 7/8, 1, 1-1/8	1-1/8	1	7/16	7/8	1-5/16	1.1
BK28	2.2	2.6	3.0	1/2, 5/8, 3/4, 7/8, 1, 1-1/8	1-1/8	1	7/16	7/8	1-5/16	1.4
BK30	2.4	2.8	3.2	5/8, 3/4, 7/8, 1, 1-1/8	1-1/8	1	7/16	7/8	1-5/16	1.5
BK32	2.6	3.0	3.4	1/2, 5/8, 3/4, 7/8, 1, 1-1/8	1-1/8	1	7/16	7/8	1-5/16	1.5
BK34	2.8	3.2	3.6	1/2, 5/8, 3/4, 7/8, 1, 1-1/8	1-1/4	1	7/16	7/8	1-5/16	1.8
BK36	3.0	3.4	3.8	1/2, 5/8, 3/4, 7/8, 1, 1-1/8	1-1/8	1	7/16	7/8	1-5/16	2.0
BK40	3.2	3.6	4.0	1/2, 5/8, 3/4, 7/8, 1, 1-1/8	1-1/8	1	7/16	7/8	1-5/16	2.2
BK45	3.5	3.9	4.3	1/2, 5/8, 3/4, 7/8, 1, 1-1/8	1-1/8	1	7/16	7/8	1-5/16	2.7
BK46	3.6	4.0	4.4	1/2, 5/8, 3/4, 7/8, 1, 1-1/8	1-1/8	1	7/16	7/8	1-5/16	2.7
BK47	3.7	4.1	4.5	1/2, 5/8, 3/4, 7/8, 1, 1-1/8	1-1/8	1	7/16	7/8	1-5/16	2.9
BK48	3.8	4.2	4.6	1/2, 5/8, 3/4, 7/8, 1, 1-1/8	1-1/8	1	7/16	7/8	1-5/16	3.0
BK50	4.0	4.4	4.8	5/8, 3/4, 7/8, 1, 1-1/8	1-1/8	2	7/16	7/8	1-5/16	3.2
BK52	4.2	4.6	5.0	1/2, 5/8, 3/4, 7/8, 1, 1-1/8, 1-3/16	1-3/16	2	7/16	7/8	1-5/16	3.4
BK55	4.5	4.9	5.3	5/8, 3/4, 7/8, 1, 1-1/8	1-1/8	2	7/16	7/8	1-5/16	4.0
BK57	4.7	5.1	5.5	5/8, 3/4, 7/8, 1, 1-1/8	1-1/8	2	7/16	7/8	1-5/16	4.1
BK62	5.2	5.6	6.0	1/2, 5/8, 3/4, 7/8, 1, 1-1/8, 1-3/16	1-3/16	3	7/16	7/8	1-5/16	3.6
BK64	5.4	5.8	6.2	1/2, 5/8, 3/4, 7/8, 1, 1-1/8, 1-3/16	1-3/16	3	7/16	7/8	1-5/16	3.7
BK65	5.5	5.9	6.3	1/2, 5/8, 3/4, 7/8, 1, 1-1/8	1-1/8	3	7/16	7/8	1-5/16	3.7
BK67	5.7	6.1	6.5	1/2, 5/8, 3/4, 7/8, 1	1	3	7/16	7/8	1-5/16	3.7
BK68	5.8	6.2	6.6	5/8, 3/4, 1, 1-3/16	1-3/16	3	7/16	7/8	1-5/16	3.6
BK70	6.0	6.4	6.8	1/2, 5/8, 3/4, 7/8, 1, 1-3/16	1-3/16	3	7/16	7/8	1-5/16	3.7
BK72	6.2	6.6	7.0	1/2, 5/8, 3/4, 7/8, 1	1	3	7/16	7/8	1-5/16	3.8
BK75	6.5	6.9	7.3	5/8, 3/4, 7/8, 1, 1-1/8, 1-3/16	1-3/16	3	7/16	7/8	1-5/16	4.3
BK77	6.7	7.1	7.5	1/2, 5/8, 3/4, 1, 1-1/8, 1-3/16	1-3/16	3	7/16	7/8	1-5/16	4.5
BK80	7.0	7.4	7.8	5/8, 3/4, 7/8, 1, 1-1/8, 1-3/16, 1-1/4, 1-3/8, 1-7/16	1-7/16	3	7/16	7/8	1-5/16	5.1
BK85	7.5	7.9	8.3	5/8, 3/4, 7/8, 1, 1-1/8, 1-3/16, 1-1/4	1-1/4	3	7/16	7/8	1-5/16	5.5
BK90	8.0	8.4	8.8	5/8, 3/4, 7/8, 1, 1-1/4	1-1/4	3	7/16	7/8	1-5/16	6.0
BK92	8.2	8.6	9.0	1/2, 5/8, 3/4, 7/8, 1, 1-1/8, 1-3/16, 1-1/4, 1-7/16	1-7/16	3	7/16	7/8	1-5/16	6.2
BK95	8.5	8.9	9.3	5/8, 3/4, 7/8, 1, 1-7/16	1-7/16	3	7/16	7/8	1-5/16	6.3
BK100	9.0	9.4	9.8	5/8, 3/4, 7/8, 1, 1-1/8, 1-3/16, 1-7/16	1-7/16	3	7/16	7/8	1-5/16	7.2
BK105	9.5	9.9	10.3	5/8, 3/4, 1, 1-3/16, 1-1/4, 1-7/16	1-7/16	3	7/16	7/8	1-5/16	7.7
BK110	10.0	10.4	10.8	5/8, 3/4, 7/8, 1, 1-1/8, 1-1/4	1-1/4	3	7/16	7/8	1-5/16	8.2
BK115	10.5	10.9	11.3	5/8, 3/4, 7/8, 1, 1-1/8, 1-1/4	1-1/4	3	7/16	7/8	1-5/16	8.7
BK120	11.0	11.4	11.8	3/4, 7/8, 1, 1-3/16, 1-7/16	1-7/16	3	7/16	7/8	1-5/16	9.2
BK130	12.0	12.4	12.8	3/4, 7/8, 1, 1-3/16	1-3/16	3	7/16	7/8	1-5/16	9.6
BK140	13.0	13.4	13.8	3/4, 7/8, 1, 1-1/4	1-1/4	3	7/16	7/8	1-5/16	11.2
BK160	15.0	15.4	15.8	3/4, 7/8, 1, 1-1/4	1-1/4	3	7/16	7/8	1-5/16	12.9
BK190	18.0	18.4	18.8	3/4, 7/8, 1, 1-1/4	1-1/4	3	7/16	7/8	1-5/16	14.5

◆ P.D. for A belts = Datum Dia. + .38
P.D. for B belts = Datum Dia. + .36

Dimensions are for reference only.

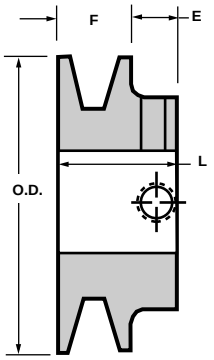

Type 1

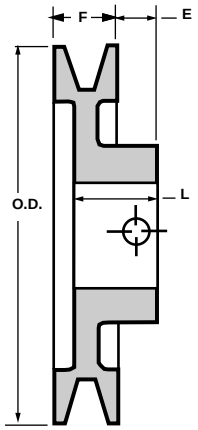

Type 2

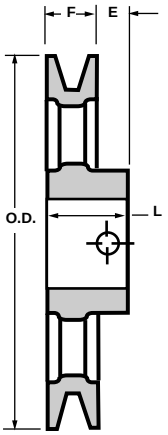

Type 3

STANDARD KEYSEAT DIMENSIONS

Shaft Dia.	Width	Depth
1/2	No Keyseat	
5/8, 7/8	3/16	3/32
1-5/16, 1-1/4	1/4	1/8
1-5/16, 1-3/8	5/16	5/32
1-7/16, 1-3/4	3/8	3/16

Note: Sheaves with 1" bores and larger are furnished with two 5/16" setscrews.

Sheaves with bores smaller than 1" are furnished with one 5/16" setscrew.

CARLISLE DURAPOWER FHP

TWO GROOVE

BORED-TO-SIZE SHEAVES *(cont.)*

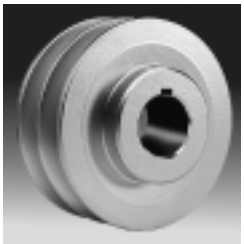

DIMENSIONS (in inches)

Sheave No.	DATUM DIA. 4L (A)	DATUM DIA. 5L (B)	O.D. ◆	Stock Bores	Max. Bore	Type	Dimensions E	Dimensions F	Dimensions L	Wt. Lbs.
2BK23	1.7	2.1	2.3	1/2, 5/8, 3/4, 7/8, 1	1	1A	1/2	1-5/8	2-1/8	1.3
2BK25	1.9	2.3	2.5	1/2, 5/8, 3/4, 7/8, 1	1	1A	1/2	1-5/8	2-1/8	1.4
2BK26	2.0	2.4	2.8	5/8, 3/4, 7/8, 1, 1-1/8	1-1/8	1A	1/2	1-5/8	2-1/8	1.6
2BK28	2.2	2.6	3.0	1/2, 5/8, 3/4, 7/8, 1, 1-1/8	1-1/8	1A	1/2	1-5/8	2-1/8	1.9
2BK30	2.4	2.8	3.2	5/8, 3/4, 7/8, 1, 1-1/8, 1-3/8	1-3/8	1A	1/2	1-5/8	2-1/8	1.9
2BK32	2.6	3.0	3.4	1/2, 5/8, 3/4, 7/8, 1, 1-1/8, 1-3/16, 1-1/4, 1-7/16	1-7/16	1A	1/2	1-5/8	2-1/8	2.2
2BK34	2.8	3.2	3.6	5/8, 3/4, 7/8, 1, 1-1/8	1-1/8	1A	1/2	1-5/8	2-1/8	2.4
2BK36	3.0	3.4	3.8	5/8, 3/4, 7/8, 1, 1-1/8	1-1/8	1A	1/2	1-5/8	2-1/8	3.0
2BK40	3.2	3.6	4.0	5/8, 3/4, 7/8, 1, 1-1/8, 1-3/16, 1-1/4, 1-3/8, 1-7/16	1-7/16	1A	1/2	1-5/8	2-1/8	4.0
2BK45	3.5	3.9	4.3	7/8, 1, 1-1/8, 1-1/4	1-1/4	1A	1/2	1-5/8	2-1/8	4.5
2BK47	3.7	4.1	4.5	5/8, 7/8, 1, 1-1/8	1-1/8	1A	1/2	1-5/8	2-1/8	5.1
2BK50	4.0	4.4	4.8	5/8, 3/4, 7/8, 1, 1-1/8, 1-3/8, 1-7/16	1-7/16	1A	1/2	1-5/8	2-1/8	5.4
2BK52	4.2	4.6	5.0	5/8, 3/4, 7/8, 1, 1-1/8, 1-1/4, 1-3/8, 1-7/16	1-7/16	2A	1/2	1-5/8	1-3/4	5.7
2BK54	4.4	4.8	5.2	5/8, 3/4, 1, 1-1/8, 1-7/16	1-7/17	2A	1/2	1-5/8	1-3/4	6.9
2BK55	4.5	4.9	5.3	1-1/8, 1-3/8	1-3/8	2A	1/2	1-5/8	1-3/4	6.5
2BK57	4.7	5.1	5.5	3/4, 7/8, 1, 1-1/8	1-1/8	2A	1/2	1-5/8	1-3/4	6.0
2BK60	5.0	5.4	5.8	3/4, 7/8, 1, 1-1/8, 1-3/8	1-3/8	2A	1/2	1-5/8	1-3/4	6.3
2BK62	5.2	5.6	6.0	5/8, 3/4, 7/8, 1, 1-1/8, 1-3/16, 1-1/4, 1-3/8, 1-7/16	1-3/8	2A	1/2	1-5/8	1-3/4	7.6
2BK65	5.5	5.9	6.3	3/4, 7/8, 1, 1-1/8	1-1/8	3A	1/2	1-5/8	1-3/4	5.2
2BK67	5.7	6.1	6.5	3/4, 7/8, 1, 1-1/8	1-1/8	3A	1/2	1-5/8	1-3/4	5.8
2BK70	6.0	6.4	6.8	3/4, 1, 1-1/8, 1-3/8	1-3/8	3A	1/2	1-5/8	1-3/4	5.6
2BK80	7.0	7.4	7.8	3/4, 1, 1-1/8, 1-3/16, 1-1/4, 1-3/8, 1-7/16	1-7/16	3A	1/2	1-5/8	1-3/4	6.9
2BK90	8.0	8.4	8.8	3/4, 1, 1-1/8, 1-1/4	1-1/4	3A	1/2	1-5/8	1-3/4	8.0
2BK100	9.0	9.4	9.8	3/4, 1, 1-1/8, 1-7/16	1-7/16	3A	1/2	1-5/8	1-3/4	9.5
2BK110	10.0	10.4	10.8	3/4, 1, 1-1/8, 1-3/16	1-3/16	3A	1/2	1-5/8	1-3/4	11.4
2BK120	11.0	11.4	11.8	3/4, 1, 1-3/16, 1-1/4, 1-7/16	1-7/16	3A	1/2	1-5/8	1-3/4	13.2
2BK130	12.0	12.4	12.8	1, 1-3/16, 1-1/4, 1-7/16	1-7/16	3A	1/2	1-5/8	1-3/4	14.8
2BK140	13.0	13.4	13.8	3/4, 1, 1-3/16, 1-7/16	1-7/16	3A	1/2	1-5/8	1-3/4	15.6
2BK160	15.0	15.4	15.8	1, 1-1/8, 1-3/16, 1-7/16	1-7/16	3A	1/2	1-5/8	1-3/4	18.5
2BK190	18.0	18.4	18.8	1, 1-3/16, 1-7/16	1-7/16	3A	1/2	1-5/8	1-3/4	21.5

◆ P.D. for A belts = Datum Dia. + .38
P.D. for B belts = Datum Dia. + .36

Dimensions are for reference only.

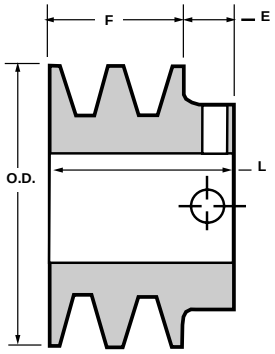

Type 1A

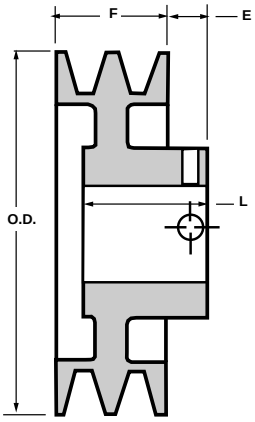

Type 2A

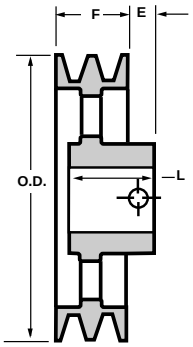

Type 3A

STANDARD KEYSEAT DIMENSIONS

Shaft Dia.	Width	Depth
1/2	No Keyseat	
5/8, 7/8	3/16	3/32
1-5/16, 1-1/4	1/4	1/8
1-5/16, 1-3/8	5/16	5/32
1-7/16, 1-3/4	3/8	3/16

Note: Sheaves with 1" bores and larger are furnished with two 5/16" setscrews.

Sheaves with bores smaller than 1" are furnished with one 5/16" setscrew.

CARLISLE DURAPOWER FHP
LIGHT-DUTY ADJUSTABLE
SHEAVE DIMENSIONS

The one and two groove adjustable sheaves are machined from annealed cast iron and are designed for 4L or A and 5L or B, V-Belts. The datum diameter of the sheaves is adjusted by loosening the set screws in the hubs and turning the threaded flange to the desired setting and then the set screws are retightened. The sheaves will give 30% change in datum diameter.

One Groove

Two Groove

One Groove

Sheave No.	O.D.	Pitch Diameter Range 3L or O Belts	4L or A Belts	5L or B Belts	Overall Width	Stock Bores	Max. Bore	Wt. Lbs.
8325-S	3.25	1.9-2.7	2.38-3.38	2.86-3.36	1-7/8	1/2, 5/8, 3/4	3/4	1.3
8325-M	3.25	1.9-2.7	2.38-3.38	2.86-3.36	1-7/8	7/8, 1, 1-1/8	1-1/8	1.8
8350-S	3.75	2.3-3.1	2.78-3.78	3.06-4.06	1-7/8	1/2, 5/8, 3/4	3/4	1.6
8350-M	3.75	2.3-3.1	2.78-3.78	3.06-4.06	1-7/8	7/8, 1, 1-1/8	1-1/8	2.2
8400-S	4.15	2.7-3.5	3.18-4.18	3.46-4.46	1-3/4	1/2, 5/8, 3/4	3/4	2.0
8400-M	4.15	2.7-3.5	3.18-4.18	3.46-4.46	1-3/4	7/8, 1, 1-1/8	1-1/8	2.6
8450-S	4.75	3.3-4.1	3.78-4.78	4.06-5.06	1-3/4	1/2, 5/8, 3/4	3/4	2.5
8450-M	4.75	3.3-4.1	3.78-4.78	4.06-5.06	1-3/4	7/8, 1, 1-1/8	1-1/8	3.0
8550-S	5.35	3.9-4.7	4.38-5.38	4.66-5.66	1-3/4	1/2, 5/8, 3/4	3/4	4.0
8550-M	5.35	3.9-4.7	4.38-5.38	4.66-5.66	1-3/4	7/8, 1, 1-1/8	1-1/8	4.0
8600-M	6.00	4.55-5.35	5.08-6.18	5.26-6.26	1-3/4	5/8, 3/4, 7/8, 1-1-1/8	1-1/8	4.4
8600-L	6.00	4.55-5.35	5.08-6.18	5.26-6.26	1-3/4	1-3/8	1-3/8	5.5
8670-M	6.70	—	5.78-6.88	5.96-6.96	1-3/4	3/4, 7/8, 1, 1-1/8	1-1/8	6.3
8670-L	6.70	—	5.78-6.88	5.96-6.96	1-3/4	1-3/8	1-3/8	6.3
8740-M	7.40	—	6.48-7.58	6.66-7.66	1-3/4	3/4, 7/8, 1, 1-1/8	1-1/8	7.2
8740-L	7.40	—	6.48-7.58	6.66-7.66	1-3/4	1-3/8	1-3/8	7.2

Two Groove

Sheave No.	O.D.	Pitch Diameter Range 3L or O Belts	4L or A Belts	5L or B Belts	Overall Width	Stock Bores	Max. Bore	Wt. Lbs.
D8325-M	3.25	2.2-2.6	2.38-3.38	2.86-3.36	3	1/2, 5/8, 3/4, 7/8, 1, 1-1/8	1-1/8	3.3
D8350-M	3.75	2.3-3.1	2.78-3.78	3.06-4.06	3	5/8, 3/4, 7/8, 1, 1-1/8	1-1/8	4.1
D8400-M	4.15	2.7-3.5	3.18-4.18	3.46-4.46	3-3/8	5/8, 3/4, 7/8, 1, 1-1/8	1-1/8	5.1
D8450-M	4.75	3.3-4.1	3.78-4.78	4.06-5.06	3-3/8	5/8, 3/4, 7/8, 1, 1-1/8	1-1/8	6.0
D8550-M	5.35	3.9-4.7	4.38-5.38	4.66-5.66	3-3/8	5/8, 3/4, 7/8, 1, 1-1/8	1-1/8	7.0
D8550-L	5.35	3.9-4.7	4.38-5.38	4.66-5.66	3-3/8	1-3/8, 1 5/8	1-5/8	8.5
D8600-M	6.00	4.55-5.35	5.08-6.18	5.26-6.26	3-3/8	3/4, 7/8, 1, 1-1/8	1-1/8	8.7
D8600-L	6.00	4.55-5.35	5.08-6.18	5.26-6.26	3-3/8	1-3/8, 1-5/8	1-5/8	10.1
D8670-M	6.75	—	5.78-6.88	5.96-6.96	3-3/8	3/4, 7/8, 1, 1-1/8	1-1/8	12.4
D8670-L	6.75	—	5.78-6.88	5.96-6.96	3-3/8	1-3/8, 1-5/8	1-5/8	12.4
D8740-M	7.37	—	6.48-7.58	6.66-7.66	3-3/8	3/4, 7/8, 1, 1-1/8	1-1/8	14.8
D8740-L	7.37	—	6.48-7.58	6.66-7.66	3-3/8	1-3/8, 1-5/8	1-5/8	14.8

CROSSOVER FOR CARLISLE DURAPOWER FHP

LIGHT DUTY SHEAVES
BORED-TO-SIZE

ONE GROOVE 3L-4L Combination

New Number	Old Number	O.D.	New Number	Old Number	O.D.	New Number	Old Number	O.D.	New Number	Old Number	O.D.
AK15	1A15F	1.6	**AK32**	1A33F	3.3	**AK66**	—	6.5	**AK109**	—	10.8
AK17	1A18F	1.8	**AK34**	1A35F	3.5	**AK69**	—	6.8	—	1A110F	11.0
AK19	—	2.0	**AK39**	1A38F	3.8	**AK71**	—	7.0	**AK114**	—	11.3
AK20	1A20F	2.1	**AK41**	1A40F	4.0	**AK74**	1A73F	7.3	—	1A120F	12.0
AK21	—	2.2	**AK44**	1A43F	4.3	**AK79**	—	7.8	**AK124**	1A123F	12.3
AK22	—	2.3	**AK46**	1A45F	4.5	**AK81**	1A80F	8.0	—	1A130F	13.0
AK23	1A23F	2.4	**AK49**	1A48F	4.8	**AK84**	1A83F	8.3	**AK134**	—	13.3
AK24	—	2.5	**AK51**	1A50F	5.0	**AK89**	—	8.8	**AK141**	1A140F	14.0
AK25	1A25F	2.6	**AK54**	1A53F	5.3	**AK91**	1A90F	9.0	**AK144**	—	14.3
AK26	—	2.7	**AK56**	1A55F	5.5	**AK94**	1A93F	9.3	**AK154**	—	15.3
AK27	—	2.8	**AK59**	—	5.8	**AK99**	—	9.8	**AK184**	—	18.3
AK28	1A28F	2.9	**AK61**	1A60F	6.0	—	1A100F	10.0			
AK30	1A30F	3.1	**AK64**	1A63F	6.3	**AK104**	1A103F	10.3			

TWO GROOVE 3L-4L Combination

New Number	Old Number	O.D.	New Number	Old Number	O.D.	New Number	Old Number	O.D.	New Number	Old Number	O.D.
2AK20	2A20F	2.1	**2AK30**	2A30F	3.1	**2AK51**	2A50F	5.0	**2AK94**	2A93F	9.3
2AK21	—	2.2	**2AK32**	2A33F	3.3	**2AK54**	2A53F	5.3	**2AK104**	2A103F	10.3
2AK22	—	2.3	**2AK34**	2A35F	3.5	**2AK56**	2A55F	5.5	**2AK114**	2A113F	11.3
2AK23	2A23F	2.4	**2AK39**	2A38F	3.8	**2AK59**	2A58F	5.8	**2AK124**	2A123F	12.3
2AK25	2A25F	2.6	**2AK41**	2A40F	4.0	**2AK61**	2A60F	6.0	**2AK134**	2A133F	13.3
2AK26	—	2.7	**2AK44**	2A43F	4.3	**2AK64**	2A63F	6.3	**2AK144**	2A143F	14.3
2AK27	—	2.8	**2AK46**	2A45F	4.5	**2AK74**	2A73F	7.3	**2AK154**	2A153F	15.3
2AK28	2A28F	2.9	**2AK49**	2A48F	4.8	**2AK84**	2A83F	8.3	**2AK184**	2A183F	18.3

ONE GROOVE 4L-5L Combination

New Number	Old Number	O.D.	New Number	Old Number	O.D.	New Number	Old Number	O.D.	New Number	Old Number	O.D.
BK19	—	1.9	**BK36**	1B38F	3.8	**BK62**	1B60F	6.0	**BK90**	1B88F	8.8
—	1B20F	2.0	**BK40**	1B40F	4.0	—	1B62F	6.2	—	1B90F	9.0
BK22	1B22F	2.2	—	1B42F	4.2	**BK64**	—	6.2	**BK92**	—	9.0
BK23	1B23F	2.3	**BK45**	—	4.3	**BK65**	—	6.3	**BK95**	—	9.3
BK24	—	2.4	**BK46**	1B44F	4.4	—	1B64F	6.4	**BK100**	1B98F	9.8
BK25	1B25F	2.5	**BK47**	1B45F	4.5	**BK67**	—	6.5	**BK105**	—	10.3
—	1B28F	2.8	**BK48**	1B46F	4.6	—	1B66F	6.6	**BK110**	1B108F	10.8
BK26	—	2.8	**BK50**	1B48F	4.8	**BK68**	—	6.6	—	1B114F	11.4
BK27	—	2.9	**BK52**	1B50F	5.0	**BK70**	1B68F	6.8	**BK115**	—	11.3
BK28	1B30F	3.0	—	1B52F	5.2	**BK72**	1B70F	7.0	**BK120**	1B118F	11.8
BK30	—	3.2	—	1B54F	5.4	—	1B72F	7.2	**BK130**	1B128F	12.8
BK32	—	3.4	**BK55**	—	5.3	**BK75**	—	7.3	**BK140**	—	13.8
—	1B33F	3.3	—	1B56F	5.6	**BK77**	—	7.5	**BK160**	—	15.8
BK34	—	3.6	**BK57**	—	5.5	**BK80**	1B78F	7.8	**BK190**	—	18.8
—	1B35F	3.5	—	1B58F	5.8	**BK85**	—	8.3			

TWO GROOVE 4L-5L Combination

New Number	Old Number	O.D.	New Number	Old Number	O.D.	New Number	Old Number	O.D.	New Number	Old Number	O.D.
2BK23	—	2.3	**2BK34**	—	3.6	**2BK57**	2B55F	5.5	**2BK110**	2B108F	10.8
2BK25	2B25F	2.5	**2BK36**	2B38F	3.8	**2BK60**	2B58F	5.8	**2BK120**	2B118F	11.8
2BK26	—	2.8	**2BK40**	2B40F	4.0	**2BK62**	2B60F	6.0	**2BK130**	2B128F	12.8
—	2B28F	2.8	**2BK45**	2B43F	4.3	**2BK65**	2B63F	6.3	**2BK140**	2B138F	13.8
2BK28	2B30F	3.0	**2BK47**	2B45F	4.5	**2BK67**	2B65F	6.5	**2BK160**	2B158F	15.8
2BK30	—	3.2	**2BK50**	2B48F	4.8	**2BK70**	2B68F	6.8	**2BK190**	2B188F	18.8
—	2B33F	3.3	**2BK52**	2B50F	5.0	**2BK80**	2B78F	7.8			
2BK32	—	3.4	**2BK54**	—	5.2	**2BK90**	2B88F	8.8			
—	2B35F	3.5	**2BK55**	2B53F	5.3	**2BK100**	2B98F	9.8			

CROSSOVER FOR CARLISLE DURAPOWER FHP

LIGHT DUTY SHEAVES

BUSHED TYPE

ONE GROOVE 3L-4L Combination		TWO GROOVE 3L-4L Combination		
New Number	Old Number	New Number	Old Number	O.D.
AK30QT	1A31D	**2AK30QT**	2A31D	3.0
AK32QT	1A33D	**2AK32QT**	2A33D	3.2
AK34QT	1A35D	**2AK34QT**	2A35D	3.4
AK39QT	1A38D	**2AK39QT**	2A38D	3.7
AK41QT	1A40D	**2AK41QT**	2A40D	3.9
AK44QT	1A43D	**2AK44QT**	2A43D	4.2
AK46QT	1A45D	**2AK46QT**	2A45D	4.4
AK49QT	1A48D	**2AK49QT**	2A48D	4.7
AK51QT	1A50D	**2AK51QT**	2A50D	4.9
AK54QT	1A53D	**2AK54QT**	2A53D	5.2
AK56QT	1A55D	**2AK56QT**	2A55D	5.4
AK59QT	1A58D	**2AK59QT**	2A58D	5.7
AK61QT	1A60D	**2AK61QT**	2A60D	5.9
AK64QT	1A63D	**2AK64QT**	2A63D	6.2
AK66QT	1A65D	—	—	6.4
AK69QT	1A68D	—	—	6.7
AK71QT	1A70D	—	—	6.9
AK74QT	1A73D	**2AK74QT**	2A73D	7.2
AK79QT	1A78D	—	—	7.7
AK84QT	1A83D	**2AK84QT**	2A83D	8.2
AK89QT	1A88D	—	—	8.7
AK94QT	1A93D	**2AK94QT**	2A93D	9.2
AK99QT	1A98D	—	—	9.7
AK104QT	1A103D	**2AK104QT**	2A103D	10.2
AK109QT	1A108D	—	—	10.7
AK114QT	1A113D	**2AK114QT**	2A113D	11.2
AK124QT	1A123D	**2AK124QT**	2A123D	12.2
AK134QT	1A133D	**2AK134QT**	2A133D	13.2
AK144QT	1A143D	**2AK144QT**	2A143D	14.2
AK154QT	1A153D	**2AK154QT**	2A153D	15.2
AK184QT	—	**2AK184QT**	—	18.2

ONE GROOVE 4L-5L Combination		TWO GROOVE 4L-5L Combination		
New Number	Old Number	New Number	Old Number	
BK30QT	1B32D	—	—	3.1
BK32QT	1B34D	**2BK32QT**	2B34D	3.3
BK34QT	1B36D	**2BK34QT**	2B36D	3.5
BK36QT	1B38D	**2BK36QT**	2B38D	3.7
BK40QT	1B40D	**2BK40QT**	2B40D	3.9
BK45QT	1B43D	**2BK45QT**	2B43D	4.2
BK47QT	1B45D	**2BK47QT**	2B45D	4.4
BK50QT	1B48D	**2BK50QT**	2B48D	4.7
BK52QT	1B50D	**2BK52QT**	2B50D	4.9
BK55QT	1B53D	**2BK55QT**	2B53D	5.2
BK57QT	1B55D	**2BK57QT**	2B55D	5.4
BK60QT	1B58D	**2BK60QT**	2B58D	5.7
BK62QT	1B60D	**2BK62QT**	2B60D	5.9
BK65QT	1B63D	**2BK65QT**	2B63D	6.2
BK67QT	1B65D	**2BK67QT**	2B65D	6.4
BK70QT	1B68D	**2BK70QT**	2B68D	6.7
BK72QT	1B70D	**2BK72QT**	2B70D	6.9
BK75QT	1B73D	—	—	7.2
BK77QT	1B75D	—	—	7.4
BK80QT	1B78D	**2BK80QT**	2B78D	7.7
BK85QT	1B83D	—	—	8.2
BK90QT	1B88D	**2BK90QT**	2B88D	8.7
BK95QT	1B93D	—	—	9.2
BK100QT	1B98D	**2BK100QT**	2B98D	9.7
BK105QT	1B103D	—	—	10.2
BK110QT	1B108D	**2BK110QT**	2B108D	10.7
BK115QT	1B113D	—	—	11.2
BK120QT	1B118D	**2BK120QT**	2B118D	11.7
BK130QT	1B128D	**2BK130QT**	2B128D	12.7
BK140QT	1B138D	**2BK140QT**	2B138D	13.7
BK150QT	1B148D	—	—	14.7
BK160QT	1B158D	**2BK160QT**	2B158D	15.7
BK190QT	—	**2BK190QT**	—	18.7

ADJUSTABLE TYPE

ONE GROOVE 4L-5L Combination

New Number	Old Number	O.D.	New Number	Old Number	O.D.	New Number	Old Number	O.D.	New Number	Old Number	O.D.
8325	1AD33F	3.25	**8400**	1AD41F	4.15	**8550**	1AD54F	5.35	**8670**	1AD68F	6.75
8350	1AD38F	3.75	**8450**	1AD48F	4.75	**8600**	1AD60F	6.00	**8740**	1AD74F	7.40

TWO GROOVE 4L-5L Combination

New Number	Old Number	O.D.	New Number	Old Number	O.D.	New Number	Old Number	O.D.	New Number	Old Number	O.D.
D8325	2AD33F	3.25	**D8400**	2AD41F	4.15	**D8550**	2AD54F	5.35	**D8670**	2AD68F	6.75
D8350	2AD38F	3.75	**D8450**	2AD48F	4.75	**D8600**	2AD60F	6.00	**D8740**	2AD74F	7.40

STANDARD SHEAVE DIMENSIONS
FHP LIGHT DUTY SHEAVES

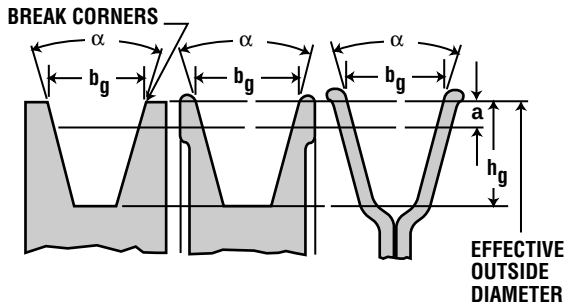

Standard Groove Dimensions

Sheave Groove Dimensions for Durapower II and XDV Belts

Belt Section	Effective Outside Diameter: Minimum Recommended (Inches)	Effective Outside Diameter: Angle Range (Inches)	α Groove Diameter ±°20' (Degrees)	d_B Ball ±0.0005 (Inches)	$2R_B$ (Inches)	b_g Reference (Inches)	h_g Minimum (Inches)	2a (Inches)
2L	0.8	Less Than 1.50 1.50 to 1.99 2.00 to 2.50 Over 2.50	32 34 36 38	0.2188	0.176 0.182 0.188 0.194	0.240	0.250	0.04
3L	1.5	Less Than 2.20 2.20 to 3.19 3.20 to 4.20 Over 4.20	32 34 36 38	0.3125	0.177 0.191 0.203 0.215	0.364	0.406	0.06
4L	2.5	Less Than 2.65 2.65 to 3.24 3.25 to 5.65 Over 5.65	30 32 34 38	0.4375	0.299 0.316 0.331 0.358	0.490	0.490	0.10
5L	3.5	Less Than 3.95 3.95 to 4.94 4.95 to 7.35 Over 7.35	30 32 34 38	0.5625	0.385 0.406 0.426 0.461	0.630	0.580	0.16

Note: The diameter used in calculating speed ratio and belt speed will be obtained by subtracting the "2a" value from the Effective Outside Diameter of the sheave.

OTHER SHEAVE TOLERANCES

Outside Diameters	tolerance (Inches)	Outside Diameter Eccentricity*	Groove Side Wobble & Runout*
For outside diameters under 6.0 inches	±0.015	For outside diameter 10.0 inches and under 0.010	For outside diameter 20.0 in. and under 0.0015 inch per inch of outside diameter
For outside diameters 6.0 to 12.0 inches	±0.020	For each additional inch of outside diameter, add 0.0005 inch	For each additional inch of outside diameter, add 0.0005 inch
For outside diameters over 2.0 inches	±0.040		

*Total Indicator Reading

CARLISLE QD BUSHING DIMENSIONS

Most widely used bushing design in the industry. Flanged with an internal keyway and completely split for easy installation. Special tapered surfaces improve grip. Axial movement is virtually eliminated.

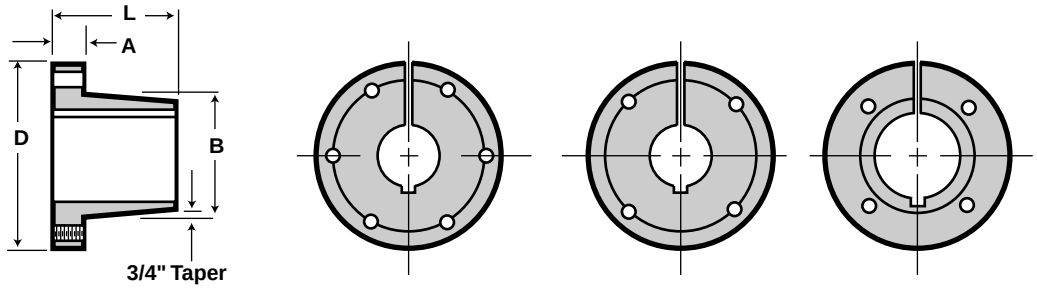

3/4" Taper
Per Foot (on Diameter)

Bushing	A	B	D	L	Bolt Circle Diameter	Weight Range Pounds Maximum Bore	Weight Range Pounds Minimum Bore	Number and Size of Cap Screws Required
QT	1/4	1.625	2-1/2	1-1/4	2	0.2	0.5	2(1/4 X 3/4)
JA	5/16	1.375	2	1	1.66	0.2	0.5	3(10-24 X 1)
SH	3/8	1.871	2-11/16	1-1/4	2.25	0.6	1.2	3(1/4 X 1-3/8)
SDS	7/16	2.187	3-3/16	1-5/16	2.69	0.8	1.7	3(1/4 X 1-3/8)
SD	7/16	2.187	3-3/16	1-13/16	2.69	0.9	2.2	3(1/4 X 1-7/8)
SK	1/2	2.812	3-7/8	1-7/8	3.31	1.5	3.9	3(5/16 X 2)
SF	1/2	3.125	4-5/8	2	3.88	2.2	5.4	3(3/8 X 2)
E	3/4	3.834	6	2-5/8	5.00	5.6	11.7	3(1/2 X 2-3/4)
F	13/16	4.437	6-5/8	3-5/8	5.63	8.5	19.4	3(9/16 X 3-5/8)
J	1	5.148	7-1/4	4-1/2	6.25	12.8	28.6	3(5/8 X 4-1/2)
M	1-1/4	6.500	9-1/8	6-3/4	7.88	29.5	63.4	4(3/4 X 6-3/4)
N	1-1/2	7.000	10	8-1/8	8.50	46.0	95.0	4(7/8 X 8)
P	1-3/4	8.250	11-3/4	9-3/8	10.00	88.0	178.0	4(1 X 9-1/2)
W	2	10.437	15	11-3/8	12.75	155.0	262.0	4(1-1/8 X 11-1/2)
S	3-1/4	12.125	17-3/4	15-3/4	15.00	285.0	410.0	5(1-1/4 X 15)

METRIC BORE — KEY DIMENSIONS — MILLIMETERS

The metric System does not refer to Keyseat or Keyway dimensions as does the English System. Instead, dimensions are given for the Key itself, which is rectangular in shape, not square as in the English System. This meets ISO standards.

Bushing	Bore (millimeters)	Key (mm.)
MQT	14, 16	5 X 5
	18, 19, 20, 22	6 X 6
	24, 25, 28, 30	8 X 7
	32, 35, 38	10 X 6
MJ	15, 16	5 X 5
	19, 20	6 X 6
	24, 25	8 X 6
	28	8 X 5
MSH	24, 25, 28, 30	8 X 7
	32, 35	10 X 8
MSDS	24, 25, 28, 30	8 X 7
	32, 35, 38	10 X 8
	40, 42	12 X 8
MSD	24, 25, 28, 30	8 X 7
	32, 35, 38	10 X 8
	40, 42	12 X 8
MSK	24, 25, 28, 30	8 X 7
	32, 35, 38	10 X 8
	40, 42	12 X 8
	48, 50	14 X 9
	55	16 X 10
MSF	28, 30	8 X 7
	32, 35, 38	10 X 8
	40, 42	12 X 8
	48, 50	14 X 9
	55	16 X 10
	60	18 X 11
	65	18 X 8

Bushing	Bore (millimeters)	Key (mm.)
ME	35, 38	10 X 8
	40, 42	12 X 8
	45, 48, 50	14 X 9
	55	16 X 10
	60, 65	18 X 11
	75	20 X 12
	80	22 X 11
MF	45, 48, 50	14 X 9
	55	16 X 10
	60, 65	18 X 11
	70, 75	20 X 12
	80, 85	22 X 14
	90	25 X 14
MJ	50	14 X 9
	55	16 X 10
	60, 65	18 X 11
	70, 75	20 X 12
	80, 85	22 X 14
	90, 95	25 X 14
	100	28 X 16
MM	80	22 X 14
	90	25 X 14
	100	28 X 16
	120	32 X 18
MN	100	28 X 16
	120	32 X 18
MP	150	36 X 20

CARLISLE QD BUSHINGS
BORE AND KEYSEAT DIMENSIONS

Bush.	Stock Bores (inches)	Keyseat
QT	3/8, 7/16	No. K.S.
	1/2, 9/16	1/8 x 1/16
	5/8, 11/16, 3/4, 13/16, 7/8	3/16 x 3/32
	15/16, 1, 1-1/16, 1-1/18, 1-3/16	1/4 x 1/2
	1-1/4	1/4 x 1/16
	1-5/16, 1-3/8	5/16 x 1/16
	1-7/16	3/8 x 1/16
JA	1/2, 9/16	1/8 x 1/16
	5/8, 11/16, 3/4, 13/16, 7/8	3/16 x 3/32
	15/16, 1	1/4 x 1/8
	1-1/16, 1-1/8, 1-3/16	1/4 x 1/16*
	1-1/4	No. K.S.
SH	1/2, 9/16	1/8 x 1/16
	5/8, 11/16, 3/4, 13/16, 7/8	3/16 x 3/32
	15/16, 1, 1-1/16, 1-1/8, 1-3/16, 1-1/4	1/4 x 1/8
	1-5/16, 1-3/8†	5/16 x 5/32
	1-7/16, 1-1/2, 1-9/16, 1-5/8	3/8 x 1/16*
	1-1/16	No. K.S.
SDS	1/2, 9/16	1/8 x 1/16
	5/8, 11/16, 3/4, 13/16, 7/8	3/16 x 3/32
	15/16, 1, 1-1/16, 1-1/8, 1-3/16, 1-1/4	1/4 x 1/8
	1-15/16, 1-3/8†	5/16 x 5/32
	1-7/16, 1-1/2, 1-9/16, 1-5/8, 1-11/16	3/8 x 3/16
	1-3/4	3/8 x 1/8*
	1-13/16	1/2 x 1/8*
	1-7/8, 1-15/16	1/2 x 1/16*
	2	No. K.S.
SD	1/2, 9/16	1/8 x 1/16
	5/8, 11/16, 3/4, 13/16, 7/8	3/16 x 3/32
	15/16, 1, 1-1/16, 1-1/8, 1-3/16, 1-1/4	1/4 x 1/8
	1-5/8, 1-3/8†	5/16 x 5/32
	1-7/16, 1-1/2, 1-9/16, 1-5/8, 1-11/16	3/8 x 3/16
	1-3/4	3/8 x 1/8*
	1-13/16	1/2 x 1/8*
	1-7/8	1/2 x 1/16*
	2	No. K.S.
SK	1/2, 9/16	1/8 x 1/16
	5/8, 11/16, 3/4, 13/16, 7/8	3/16 x 3/32
	15/16, 1, 1-1/16, 1-1/8, 1-3/16, 1-1/4	1/4 x 1/8
	1-5/16†, 1-3/8†	3/8 x 3/16
	1-7/16, 1-1/2, 1-9/16, 1-5/8, 1-11/16, 1-3/4	3/8 x 3/16
	1-13/16, 1-7/8, 1-15/16, 2, 2-1/16, 2-1/8	1/2 x 1/4
	2-3/16, 2-1/4	1/2 x 1/8*
	2-5/16, 2-3/8, 2-7/16, 2-1/2	5/8 x 1/16*
	2-9/16, 2-5/8	No. K.S.
SF	1/2, 9/16	1/8 x 1/16
	5/8, 11/16, 3/4, 13/.16, 7/8	3/16 x 3/32
	15/16, 1, 1-1/16, 1-1/8, 1-3/16, 1-1/4	1/4 x 1/8
	1-5/16, 1-3/8†	5/16 x 5/32
	1-7/16, 1-1/2, 1-9/16, 1-5/8, 1-11/16, 1-3/4	3/8 x 3/16
	1-13/16, 1-7/8, 1-15/16, 2	1/2 x 1/4
	2-1/16, 2-1/8, 2-1/4	1/2 x 1/4
	2-5/16, 2-3/8, 2-7/16, 2-1/2	5/8 x 3/16*
	2-9/16, 2-5/8, 2-11/16, 2-3/4	5/8 x 1/16*
	2-13/16, 2-7/8, 2-15/16	No. K.S.
E	7/8	3/16 x 3/32
	15/16, 1, 1-1/16, 1-1/8, 1-3/16, 1-1/4	1/4 x 1/8
	1-15/16, 1-3/8†	5/16 x 5/32
	1-7/16, 1-1/2, 1-9/16, 1-5/8, 1-11/16, 1-3/4	3/8 x 3/16
	1-13/16, 1-7/8, 1-15/16, 2	1/2 x 1/4
	2-1/16, 2-1/8, 2-3/16, 2-1/4	1/2 x 1/4
	2-5/16, 2-3/8, 2-7/16, 2-1/2	5/8 x 5/16
	2-9/16, 2-5/8, 2-11/16, 2-3/4	5/8 x 5/16
	2-13/16, 2-7/8, 2-15/16, 3	3/4 x 1/8*
	3-1/16, 3-1/8, 3-3/16, 3-1/4	3/4 x 1/8*
	3-5/16, 3-3/8, 3-7/16	7/8 x 1/16*
	3-1/2	No. K.S.
F	1, 1/16, 1-1/8, 1-3/16, 1-1/4	1/4 x 1/8
	1-5/16, 1-3/8†	5/16 x 5/32
	1-7/16, 1-1/2, 1-9/16, 1-5/8, 1-11/16, 1-3/4	3/8 x 3/16
	1-13/16, 1-7/8, 1-15/16, 2	1/2 x 1/4
	2-1/16, 2-1/8, 2-3/16, 2-1/4	1/2 x 1/4
	2-5/16, 2-3/8, 2-7/16, 2-1/2, 2-9/16	5/8 x 5/16
	2-5/8, 2-11/16, 2-3/4	5/8 x 5/16
	2-13/16, 2-7/8, 2-15/16, 3	3/4 x 3/8
	3-1/16, 3-1/8, 3-3/16, 3-1/4	3/4 x 3/8
	3-5/16, 3-3/8, 3-7/16, 3-1/2	7/8 x 3/16*
	3-9/16, 3-5/8, 3-11/16, 3-3/4	7/8 x 3/16*
	3-13/16, 3-7/8, 3-15/16	1 x 1-1/8*
	4	No. K.S.
J	1-7/16, 1-1/2, 1-9/16, 1-5/8, 1-11/16, 1-3/4	3/8 x 3/16
	1-13/16, 1-7/8, 1-15/16, 2	1/2 x 1/4
	2-1/8, 2-3/16, 2-1/4	1/2 x 1/4
	2-5/16, 2-3/8, 2-7/16, 2-1/2	5/8 x 5/16
	2-9/16, 2-5/8, 2-11/16, 2-3/4	5/8 x 5/16
	2-13/16, 2-7/8, 2-15/16, 3	3/4 x 3/8
	3-1/16, 3-1/8, 3-3/16, 3-1/4	3/4 x 3/8
	3-5/16, 3-3/8, 3-7/16, 3-1/2	7/8 x 7/16
	3-5/8, 3-11/16, 3-3/4	7/8 x 7/16
	3-13/16, 3-7/8, 3-15/16	1 x 3/8*
	4, 4-1/8, 4-3/16, 4-1/4, 4-3/8, 4-7/16, 4-1/2	1 x 1/8*
M	1-15/16, 2, 2-1/8, 2-3/16, 2-1/4	1/2 x 1/4
	2-5/16, 2-3/8, 2-7/16, 2-1/2	5/8 x 5/16
	2-5/8, 2-11/16, 2-3/4	5/8 x 5/16
	2-7/8, 2-15/16, 3, 3-1/8, 3-3/16, 3-1/4	3/4 x 3/8
	3-3/8, 3-7/16, 3-1/2, 3-5/8, 3-11/16, 3-3/4	7/8 x 7/16
	3-13/16, 3-7/8, 3-15/16, 4, 4-1/8	1 x 1/2
	4-3/16, 4-1/4, 4-3/8, 4-7/16, 4-1/2	1 x 1/2
	4-5/8, 4-11/16, 4-3/4	1-1/4 x 5/8
	4-7/8, 4-15/16, 5, 5-3/16	1-1/4 x 1/4*
	5-1/4, 5-3/8, 5-7/16, 5-1/2	1-1/4 x 1/4*
N	2-15/16, 3, 3-3/16, 3-1/4	3/4 x 3/8
	3-3/8, 3-7/16, 3-1/2, 3-9/16, 3-5/8, 3-3/4	7/8 x 7/16
	3-7/8, 3-15/16, 4, 4-3/16, 4-1/4	1 x 1/2
	4-5/16, 4-3/8, 4-7/16, 4-1/2	1 x 1/2
	4-5/8, 4-11/16, 4-3/4, 4-7/8, 4-15/16, 5	1-1/4 x 5/8
	5-3/16, 5-3/8, 5-7/16, 5-1/2	1-1/4 x 1/4*
	5-7/8	1-1/2 x 1/4*
P	2-15/16, 3-3/16, 3-1/4	3/4 x 3/8
	3-7/16, 3-1/2, 3-5/8, 3-3/4	7/8 x 7/16
	3-7/8, 3-15/16, 4, 4-1/4	1 x 1/2
	4-3/8, 4-7/16, 4-1/2	1 x 1/2
	4-5/8, 4-11/16, 4-3/4, 4-7/8	1-1/4 x 5/8
	4-15/16, 5, 5-5/16, 5-3/8	1-1/4 x 5/8
	5-7/16, 5-1/2	1-1/4 x 5/8
	5-3/4, 5-7/8, 5-15/16, 6, 6-1/2	1-1/2 x 1/4*
	7	1-3/4 x 1/4*
W	4-1/4, 4-7/16, 4-1/2	1 x 1/2
	4-5/8, 4-3/4, 5, 5-3/8 5-1/2	1-1/4 x 5/8
	5-3/4, 5-7/8, 6, 6-1/2	1-1/2 x 3/4
	8	2 x 1/4*
S	6	1-1/2 x 3/4
	8	2 x 3/4*
	9-1/4	2-1/2 x 1/4*

†Also stocked in 5/16 x 3/8 keyseat
* Shallow keyseat

Standard keyseats are used in the bores of all Carlisle Bushings. However, as the bores increase in size, it may be necessary to reduce the depth of the keyseat. When this happens, Carlisle furnishes the correct rectangular key to suit at no charge. This does not affect the bushing's ability to transmit the load. The rectangular key, or flat key as some call it, fits in the standard keyway in the shaft.

Installing QD Sheaves

WARNING ⚠ SAFETY FIRST!
In normal use, all drive assemblies should be covered by appropriate guards. During installation, removal, or maintenance, all electricity should be shut off to ensure that the drive is not started inadvertently. Before doing **ANY work on power drives, always be sure the controlling switch is in the OFF position - and locked if possible.**

Introduction
QD Bushing sizes, JA through J, can be assembled in either of two positions as shown in Figure 19 on page 273. Sizes M through S should be assembled in position one. POSITION ONE is the conventional or standard mounting. POSITION TWO (Reverse Mounting) may be necessary in some cases, such as mounting small sheaves with blind holes (not drilled through).

Installation
1. Make sure the tapered-cone surface of the bushing and the mating bore of the sheave are free of all foreign substances, such as dirt, excess paint accumulations, metal chips, lubricants, etc.
2. For POSITION ONE or POSITION TWO (whichever applies), line up the unthreaded holes (C) with the threaded holes (T) and insert cap screws with lock washers engaging only 2 or 3 threads. Screw heads should be mounted outside to enable assembly. (*a)
3. With key in shaft keyway, slide the loosely-assembled unit onto shaft and position for good belt alignment. (*b,*c) Use no lubricants or anti-seize compounds on threads or tapered surfaces.
4. Carefully tighten the cap screws alternately and progressively until tapers are seated (at approximately half the recommended torque.)
5. Check alignment and sheave runout (wobble) and correct as necessary.
6. Continue careful alternate and progressive tightening of the cap screws to the recommended torque values shown in the table. **Maximum torque should be achieved on each individual bolt only two times in the consecutive tightening.**

NOTE: When properly mounted, there will be a gap between bushing flange and sheave after screws are tightened. Do not attempt to tighten close enough to close this gap.

7. Tighten the set screw, when available, to hold the key securely during operation.

Table 22 RECOMMENDED WRENCH TORQUE VALUES TO USE IN TIGHTENING QD BUSHINGS

Bushing Size	Cap Screw Size & Thread	Foot Pounds Torque Wrench Normal Applications*
QT	1/4-1	9
JA	No. 10-24	5
SH-SDS-SD	1/4-20	9
SK	5/16-18	15
SF	3/8-16	30
E	1/2-13	60
F	9/16-12	110
J	5/8-11	135
M	3/4-10	225
N	7/8-9	300
P	1-8	450
W	1-1/8-7	600
S	1-1/4-7	750

* For severe (rock-crusher type applications) these values can be increased by a maximum of 50%. On severe applications the bolt torque should be rechecked at periodic intevals during operation.

CAUTION: Excessive cap screw torque can cause sheave and/or bushing breakage.

CAUTION: The use of lubricants can cause sheave breakage. Therefore, USE NO LUBRICANTS in this installation.

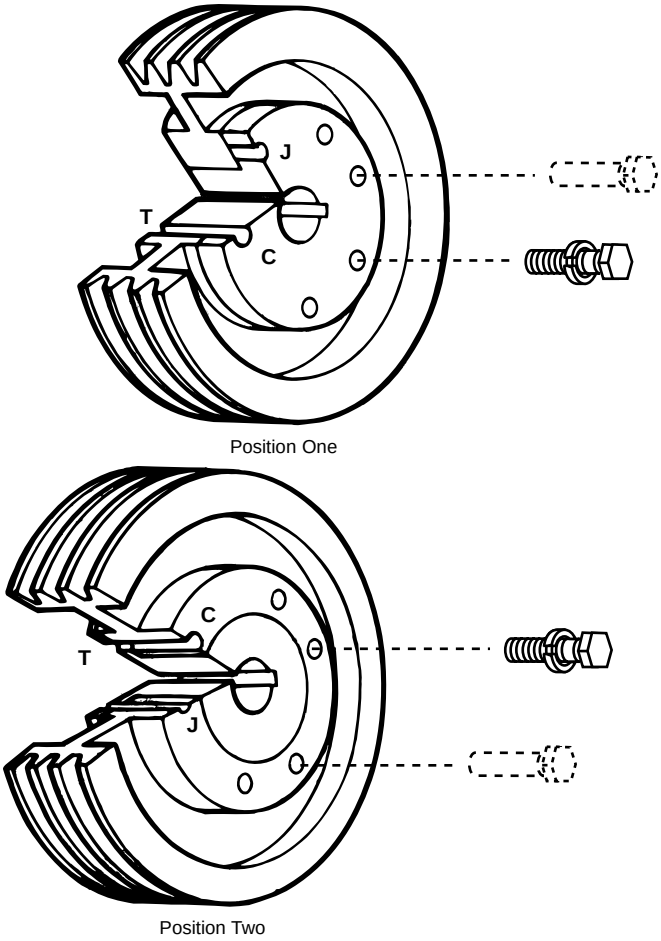

Figure 19

MOUNTING POSITION-QD BUSHINGS

REMOVAL

1. Loosen and remove all mounting cap screws.

2. Insert cap screws in all threaded jack-screw holes (J).

3. Start with the screw furthest from the bushing saw slot and tighten all jack screws alternately and progressively. Keep turning the screws in small equal amounts until the tapered surfaces disengage.

CAUTION: excessive or unequal pressure on the jack screws can break the bushing flange, making removal nearly impossible without destroying the sheave.

(*a) When mounting a sheave on an M through W size bushing, position the threaded jack-apart hole (J) as far from the bushing saw slot as possible to reduce the possibility of bushing breakage.

(*b) When installing large or heavy parts in POSITION ONE, it may be easier to mount the key and bushing on the shaft first, then place the sheave on the bushing and align the holes.

(J) **CAUTION:** When mounting on a vertical shaft, provisions must be made which will positively prevent the sheave and/or bushing from dropping during installation.

SPECIAL ENGINEERING INFORMATION

SPEED-UP DRIVES

Introduction

A speed-up drive is a drive in which the driven speed exceeds that of the driver speed. The large sheave becomes the driver and the small sheave is the driven sheave. When the application calls for a driven speed which is greater than the speed of the driver, a suitable drive can usually be obtained from the pre-engineered drive selection tables. **However, since the sheaves are reversed, the HP rating per belt must be found in the HP rating tables, based on the faster rpm of the smaller sheave.**

Since the belt speed of a speed-up drive is often higher than that of a speed reduction drive it is suggested that the drive be designed around the Carlisle Power-Wedge Cog-Belt. The centrifugal force of the Power-Wedge Cog Belt is less than than of a standard classical section belt and often results in a more economical drive.

Design Procedure

Step 1.

Determine the design horsepower by multiplying the rated motor horsepower by the service factor.

Step 2.

Determine belt cross-section from the appropriate cross-section selection figures in the V-belt drive selection section of this manual.

Step 3.

Determine the speed ratio by dividing the rpm of the faster shaft by the rpm of the slower shaft.

Step 4.

Refer to the pre-engineered drive tables and locate the desired ratio.

Step 5.

Find the required sheave diameters, center distance, V-belt number, and HP correction factor as you would for a speed reduction drive.

Step 6.

From the appropriate Horsepower Rating Table find the basic HP rating for the small sheave diameter and faster sheave rpm. Add the “Add-on HP for speed ratio” from the right of the table to find the rated HP per belt.

Step 7.

Multiply the rated HP per belt by the HP correction factor to find the corrected HP per belt.

Step 8.

Divide the Design Horsepower by the corrected HP per belt to find the number of belts. Round up fractions to the next larger whole number of belts.

Step 9.

Belt speeds should always be checked on speed-up drives using the following formula: Belt speed (fpm) = sheave rpm x .262 x sheave outside diameter. Either sheave can be used in this formula; however, it is essential that the rpm and outside diameter of the same sheave be used. If the belt speed is between 6,000 and 6,500 fpm, it is recommended that sheaves be dynamically balanced. Higher belt speeds should be referred to the factory for recommendations.

V-FLAT DRIVES

Scope

This section covers the special considerations necessary to design a successful drive using a flat pulley in place of a V-sheave. A V-flat drive is a two shaft V-belt drive which utilizes a flat pulley on the slower speed shaft (usually the driven shaft). Such a drive was commonly used for V-flat drive changeovers, but may also be used, economically, in original drive design.

V-flat drives are used to best advantage when speed ratios are large and center distances are short. Some "Rules of Thumb" as to when V-flat drives can be used are:

- when speed ratios are 3 to 1, or larger
- when center distances are equal to, or less than, the diameter of the large pulley

The types of V-belts which are suitable for V-flat drives are covered by the following RMA standards:

IP-20 Classical V-belts and Sheaves
IP-22* Narrow Multiple V-belts
IP-23 Light Duty Single V-belts
IP-26 V-Ribbed Belts

* Individual narrow belts are not recommended for V-flat drives due to the narrow bottom width and the resulting lack of stability on the flat pulley. **Use only with Joined Narrow V-belts.**

Note: *Consult Carlisle Application Engineering for recommendations concerning the use of cogged belts and power ratings to be applied.*

Special Considerations

There are three items which require special consideration when designing V-flat drives.

(1) Diameter Correction.

The outside diameter of the flat pulley must be corrected for the particular belt used so that an accurate speed ratio and a length can be calculated. The appropriate "add-on" values are shown in the table below. For classical belts,. the corrected diameter is the Datum diameter. For other belts, the corrected diameter is the Effective diameter. Refer to the appropriate standard listed in the scope for additional design information and pitch line locations for speed ratio calculation.

Table 23 "Add-On" to Flat Diameter to Determine Datum or Effective Diameter

Belt Section	"Add-On" (inches)	Belt Section	"Add-On" (inches)
3L	0.3	3V joined	0.5
4L	0.5	5V joined	0.8
5L	0.7	8V joined	1.3
A	0.5	J	0.2
B & B joined	0.7	L	0.4
C & C joined	0.9	M	0.9
D & D joined	1.2		

V-FLAT DRIVES

(Continued)

(2) Belt Tension.

Belt tensions may be higher with a V-flat drive than an equivalent V-V drive. At approximately 230 degrees wrap angle on the flat pulley and 130 degrees wrap angle on the V-sheave, the tension will be equivalent to a V-V drive. As the wrap angle on the flat pulley falls below 230 degrees, additional tension is required.

Table 24 Arc of Contact Correction Factor K for V-Flat Drive

$\frac{D-d}{C}$	Arc of Contact On Small Sheave (degrees)	Arc of Contact Correction Factor All V-Belts* Except V-Ribbed K	Arc of Contact Correction Factor V-Ribbed K
0.00	180	.75	.75
0.10	174	.76	.76
0.20	169	.78	.78
0.30	163	.79	.79
0.40	157	.80	.80
0.50	151	.81	.81
0.60	145	.83	.83
0.70	139	.84	.84
0.80	133	.85	.85
0.90	127	.85	.83
1.00	120	.82	.80
1.10	113	.80	.77
1.20	106	.77	.74
1.30	99	.73	.71
1.40	91	.70	.67
1.50	83	.65	.63

D = Diameter of Flat Pulley (large diameter)
d = diameter of V-belt Sheave (small diameter)
C = Center Distance
Refer to paragraph 1 for appropriate diameter.

*"Light Duty" V-belt design information includes a combined speed ratio-Service Factor correction to design horsepower. No further corrections are normally used. For V-flat drives, apply the arc correction factor in the above table to the "Light Duty" ratings in the same manner as for Multiple-V or Poly-Rib design.

V-FLAT DRIVES

(Continued)

(3) Flat Pulley Width and Crown.

The minimum recommended flat pulley widths are shown in the following table. The additional width is necessary to allow for lateral movement (tracking) of the belts on the flat pulley. Uncrowned pulleys should be used whenever possible and crowned pulleys should be machined flat in conversions from flat belt drives. If use of a crowned pulley is unavoidable, the maximum permissible crown is 0.12″ per foot of pulley face width (0.01 mm per mm pulley face width).

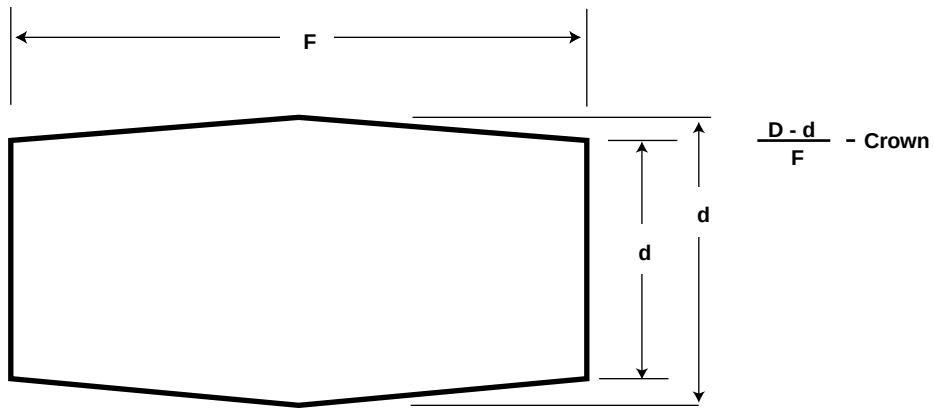

Pulley Crown

Table 25 Minimum Recommended Face Width of Flat Pulleys for V-Flat Drives,* Inches

Cross Section	Number of Belts or Ribs									For each add'l belt or rib add
	1	2	3	4	5	6	8	10	12	
3L	1.25	—	—	—	—	—	—	—	—	—
4L	1.75	—	—	—	—	—	—	—	—	—
5L	2.25	—	—	—	—	—	—	—	—	—
A	1.75	2.37**	3.00**	3.62**	4.25**	4.87**	—	—	—	0.62
B&B joined	2.25	3.00	3.75	4.50	5.25	6.00	7.50	9.00	10.50	0.75
C&C joined	2.75	3.75	4.75	5.75	6.75	7.75	9.75	11.75	13.75	1.00
D&D joined	3.75	5.18	6.62	8.06	9.50	10.93	13.81	16.68	19.56	1.44
3V joined	—	1.51	1.91	2.32	2.72	3.13	3.94	4.75	—	0.41
5V joined	—	2.54	3.23	3.91	4.60	5.29	6.67	8.04	—	0.69
8V joined	—	4.12	5.25	6.38	7.50	8.62	10.88	13.12	15.38	1.12
J	—	—	1.00	1.09	1.18	1.28	1.45	1.64	1.83	0.09
L	—	—	2.00	2.18	2.37	2.56	2.92	3.30	3.66	0.18
M	—	—	4.00	4.37	4.74	5.11	5.85	6.59	7.33	0.37

*These values are based on sheaves with standard groove spacing. If the sheave used is deep groove, or of multiple pitch design, or otherwise has non-standard groove spacing, allowance must be made for additional drive width.

Note: Joined belts can only be used with standard sheaves.

**For standard "A" groove only. Use "B" values for A belts used in A-B combination grooves.

IDLER DRIVES

Use of Idlers

Idlers are grooved sheaves or flat pulleys that do not transmit power. The purpose of idlers in V-belt drives are to:

- provide take-up for fixed center drives
- clear obstructions
- detour belts to turn corners (as in mule pulley drives)
- break up long spans where belt whip and vibration may occur
- increase arc of contact on critically loaded sheaves
- clutch certain types of drives
- to maintain tension, when idler is spring-loaded or weighted

Idlers usually “penalize” V-belt drive performance (due to the additional bending stresses they impose) so their use should be avoided when possible, by other drive changes. However, when idlers cannot be avoided, there are several factors that require consideration when designing the drive. Those considerations most important are:

- center distance and belt length
- corrections for HP rating
- idler diameters
- use of flat or grooved idlers
- installation and take-up
- placement on drive

Placement — Inside or Outside

Idlers may be placed either inside the drive or outside. An inside idler decreases the arc of contact on the adjacent sheaves. An outside idler increases the arc of contact, but the amount of take-up (in the case of take-up idlers) is limited by the belt strand(s) on the opposite side.

Outside idlers are always flat because they contact the top of the V-belt(s). Inside idlers are normally grooved sheaves, but can be flat if the V-belt(s) have large enough bottoms to retain their stability. Only grooved sheaves as inside idlers should be used with 3V, 5V, and 8V cross sections.

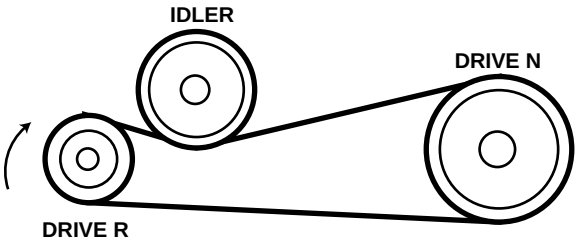

Figure 20 OUTSIDE IDLER

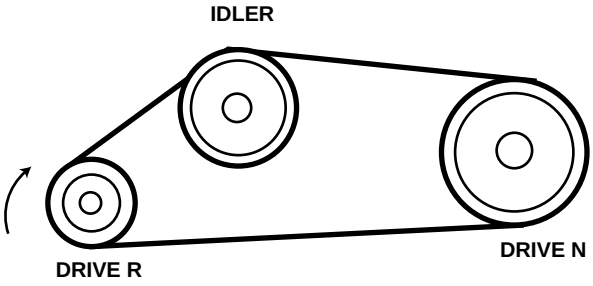

Figure 21 INSIDE IDLER

IDLER DRIVES

(Continued)

Placement — Tight or Slack Span

Every V-belt drive that transmits power has greater tensions in the spans that are closer to the driveR (in the direction opposite to the rotation of the belt). For example, the belt that goes into the driver sheave is the tightest. Idlers should be located, if at all possible, on the slack side of the drive rather than on the tight side.

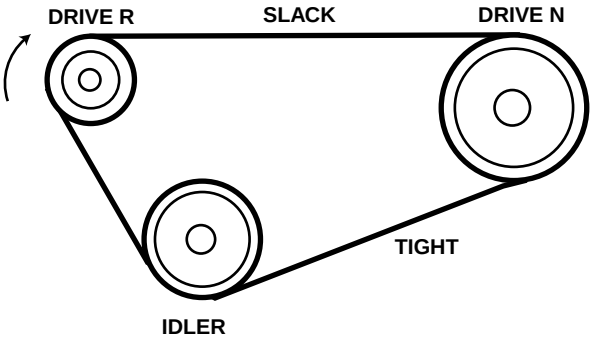

Figure 22 TIGHT SIDE IDLER

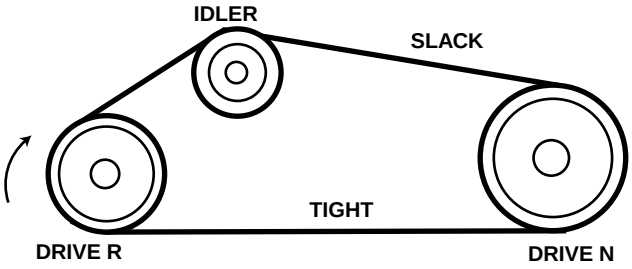

Figure 23 SLACK SIDE IDLER

Spring loaded, or weighted idlers, should be located on the slack side because the spring force, or weight, can be much less in this position. Such idlers should not be used on a drive where the load can be reversed—that is, where the slack side can become the tight side. (For assistance in determining the force required for a spring-loaded idler, consult Carlisle Application Engineering.)

Placement—In the Span

A grooved inside idler sheave may be located at any point along the span, preferably so that it gives nearly equal arcs of contact on the two adjacent pulleys, (If the drive is a V-flat drive, the idler should be located so as to give a nearly equal "V-Flat Arc of Correction factor" as found in the V-flat drives section of this manual on page 277 in Table 24.

A flat idler pulley, either inside or outside, should be located as close as possible to the preceding sheave. This is because V-belts move back and forth slightly on a flat pulley, and locating it as far away as possible from the next sheave minimizes the possibility of the belt entering that sheave in a misaligned condition. This is particularly important with respect to close-coupled drives. (although one use of idlers is to break up long spans where belt whip may be a problem, such use of flat idlers can accuate severe belt whip on some drives. For this reason, such usage of flat idlers should be thoroughly tested before finalizing the drive design.

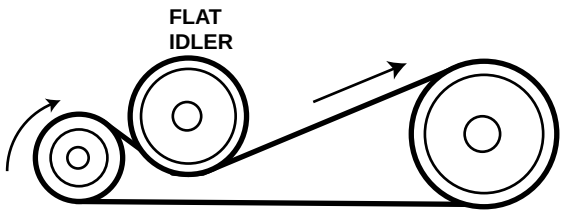

Figure 24 LOCATING FLAT IDLER

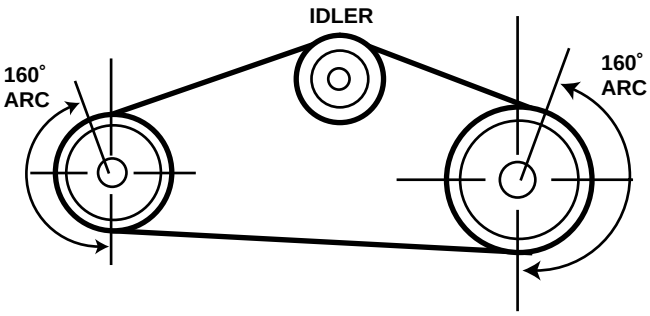

Figure 25 EQUAL ARC BETWEEN IDLERS

IDLER DRIVES

(Continued)

Idler Diameter

A common serious handicap for V-belt drive design is the use of idlers which are too small. The belt horsepower rating or belt life is reduced significantly in such cases. Inside idlers should be at least as large as the smallest loaded sheave. Outside idlers should be one third larger than the smallest loaded sheave or pulley but never less than the diameters shown in the table below.

Table 26 Minimum Recommended Outside Idlers

Belt Type	Cross Section	Minimum Idler Diameter (inches)
Classical Multiple V-Belts		
Super II/Super Blue Ribbon/Gold Label Cog V-Belt/Aramax	A, AP, AX, AK	4.3
Super II/Super Blue Ribbon/Gold Label Cog V-Belt/Aramax	B, BP, BK	7.7
Super II/Super Blue Ribbon/Gold Label Cog V-Belt/Aramax	C, CP, CK	12.5
Super Blue Ribbon/Gold Label Cog V-Belt	DP, DX	18.1
Narrow Multiple V-Belts		
Super Power-Wedge/Power-Wedge Cog V-Belt	3V, 3VX	4.0*
Super Power-Wedge/Power-Wedge Cog V-Belt	5V, 5VX	12.0*
Super Power-Wedge/Power-Wedge Cog V-Belt	8V, 8VX	18.0*
Light Duty FHP		
Durapower II/XDV	3L, 38	2.0
Durapower II/XDV	4L, 48	3.3
Durapower II/XDV	5L, 58	4.7

*Values also apply to Wedge-Band banded V-belts — R3V, R3VX, R5V, R5VX, R8V

Belt Length Determination

A drive using an idler should be laid out to scale, the extreme installation and take-up positions established and the length for the belt(s) measured in each position to make sure that the sufficient installation and take-up is available with the chosen arrangement.

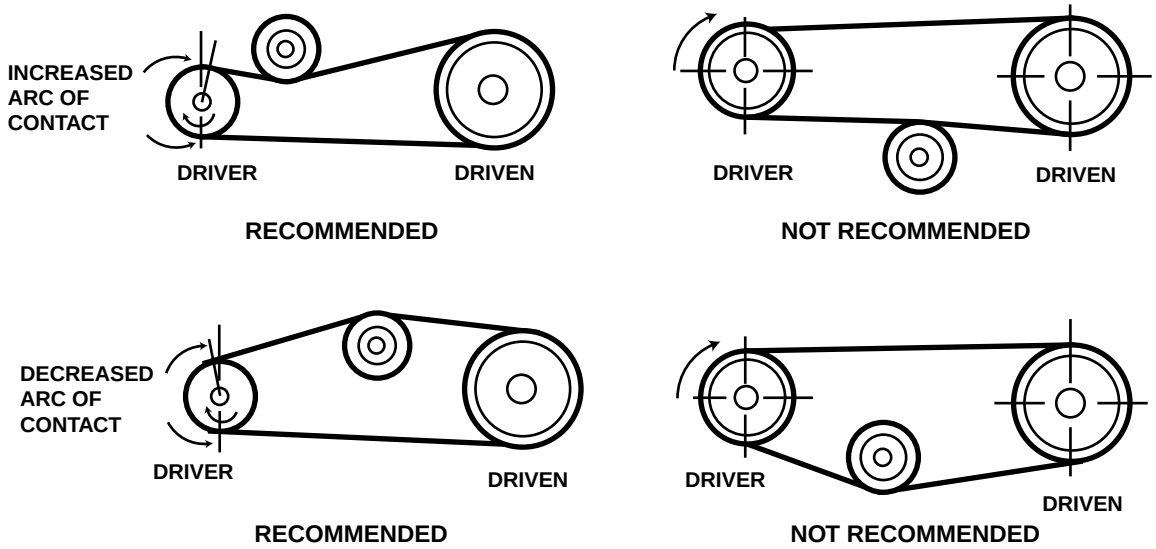

V-BELT DRIVES WITH TWIST AND NON-ALIGNMENT

V-belts can be used advantageously to transmit power between driving and driven sheaves that are misaligned with respect to each other, within prescribed limits. The belts on such drives will operate under conditions of offset and/or twist.

Offset causes the belt to enter and/or leave the sheave obliquely and to rub one side of the sheave groove more than the other. 1/8 and 1/4 turn drives put both twist and offset into each span of the belt. Such drives will give less service life than those where the sheaves are aligned. Offset should be as small as possible, and in all cases it should be limited to an offset angle (see dimension “g” in offset drive figure) into or out of the sheave groove no greater than 5 degrees. Excessive offset results in abnormal wear and/or belts turning over or jumping out of the sheave grooves. Banded V-belts may be used to minimize stability problems.

High modulus belts are not recommended because of their intolerance to sheave misalignment. Inherently these particular drives create extreme stresses on the reinforcing tensile members. The high modulus of elasticity of the tensile members prevents the absorption of the stress imposed without damage.

Deep groove sheaves are recommended for V-belt drives where belt offset exists, but standard grooves must be used for banded belts.

Design Recommendation A

Mule Drives and Other Drives Using Twisted Single Belts

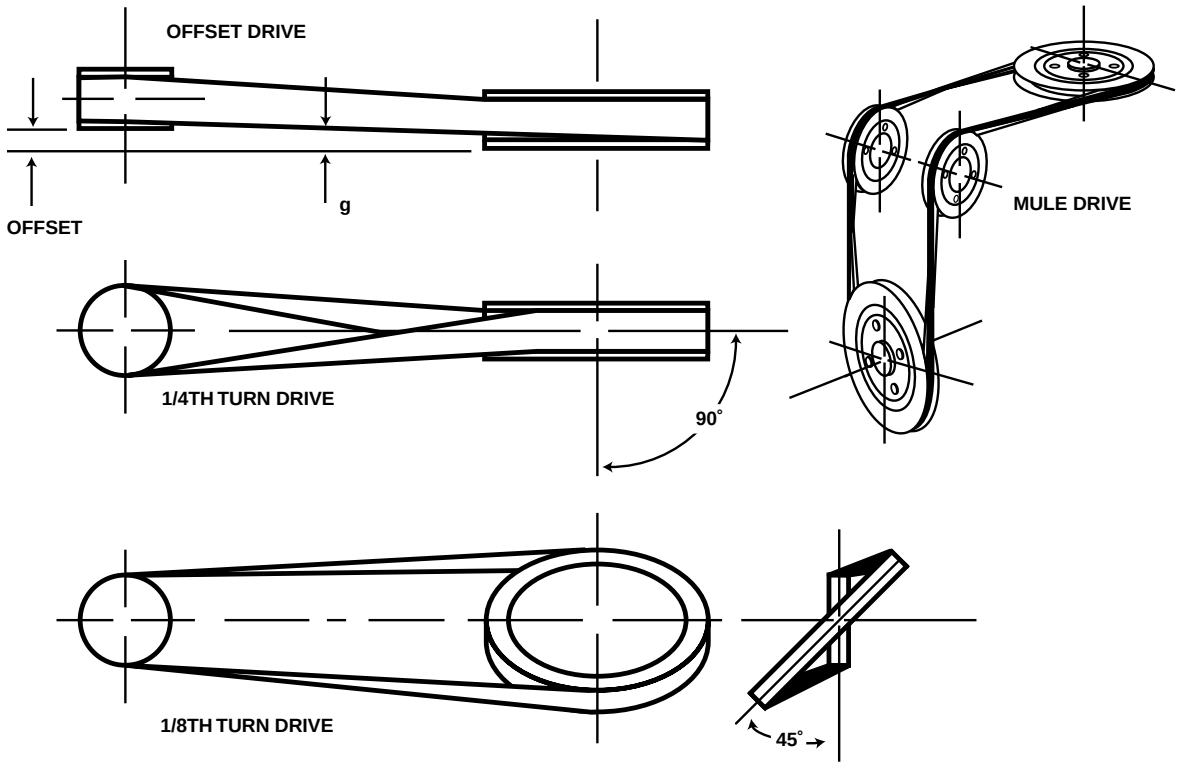

Table 27 Minimum Belt Spans Between Sheaves at 90˚ Twist of the Belt

Belt Cross Section	Span (inches)	Belt Cross Section	Span (inches)	Belt Cross Section	Span (inches)
A	9	3V	9	3L	4
B	11	5V	14	4L	8
C	14	8V	19	5L	10
D	19				

Cogged or notched V-belts may be used in these applications but are generally not recommended.
Minimum span for other twist angles (”A” degrees) is Span at 90˚ x $\frac{A}{90}$

Example: Minimum span for a C section belt with 1/8 twist or turn (45˚) is 14″ x $\frac{45}{90}$ = 7″

V-BELT DRIVES WITH TWIST AND NON-ALIGNMENT

(Continued)

Design Recommendation B

Multiple V-Belt Quarter Turn Drives

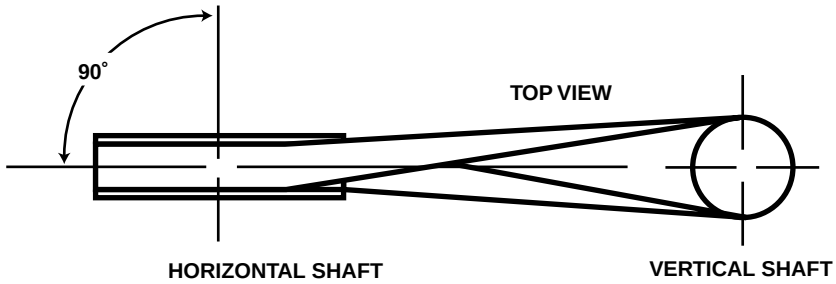

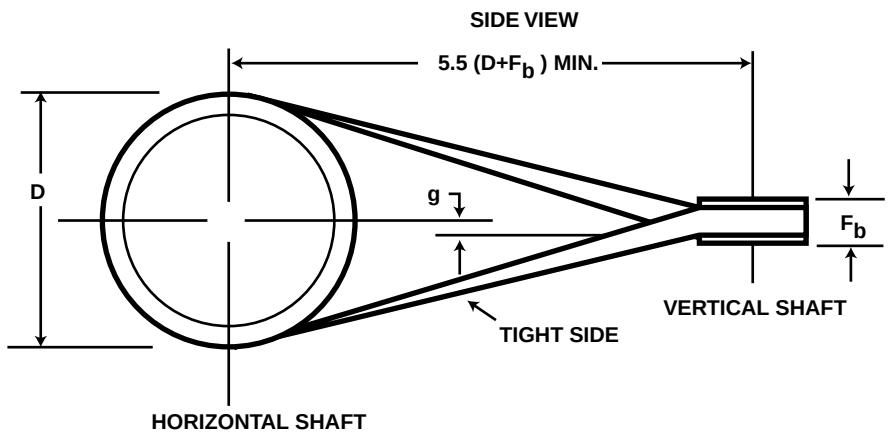

These have both twist and offset. (Use deep groove sheaves.)

Minimum Center Distance

The drive should have a minimum center distance of 5.5 ($D + F_b$),

Where:
D = diameter of the large sheave
F_b = width of the band of belts

The width of the band of belts is given by the following formula:

$F_b = (N_b - 1)S_g + b_b$

Where:
N_b = number of belts
S_g = deep groove spacing
b_b = nominal belt top width

Note: This will ensure that the angle (g) of the belt entry of exit does not exceed 5 degrees.

V-BELT DRIVES WITH TWIST AND NON-ALIGNMENT

(Continued)

Location of Sheave on Vertical Shaft of Horizontal Quarter Turn Drives

The center of the face of the sheave on the vertical shaft should be below the axis of the horizontal shaft by the amount “c” which depends on the center distance.

Table 28 Offset Dimension “e”

Center Distance (inches)	Dimension “e” (inches) A, B, C, D Cross Sections	Dimension “e” (inches) 3V, 5V, 8V Cross Sections
20	0.2	0
30	0.2	0
40	0.4	0
50	0.4	0
60	0.5	0.2
80	0.5	0.3
100	1.0	0.4
120	1.5	0.6
140	2.0	0.9
160	2.5	1.2
180	3.5	1.5
200	4.0	1.8
220	5.0	2.2
240	6.0	2.6

Arc Correction

The arc correction factor for a quarter turn drive should be taken as 1.0.

Direction of Rotation

Direction of rotation must be such that the tight side of the drive is on the bottom.

Location of Vertical Shaft

The axis of the vertical shaft should lie in a plane perpendicular to the horizontal shaft, and intersecting it at the center of the face of the sheave on the horizontal shaft.

Larger Speed Ratios

For speed ratios greater than 2 ½ : 1, the shortest center distance permissible may be too long for the usual quarter turn drive. It is suggested that an arrangement such as illustrated in the figure below be used. This consists of a quarter turn drive between the higher speed shaft, a jackshaft and a regular multiple V-belt drive (V-V or V-flat) between the jackshaft and the slower speed shaft.

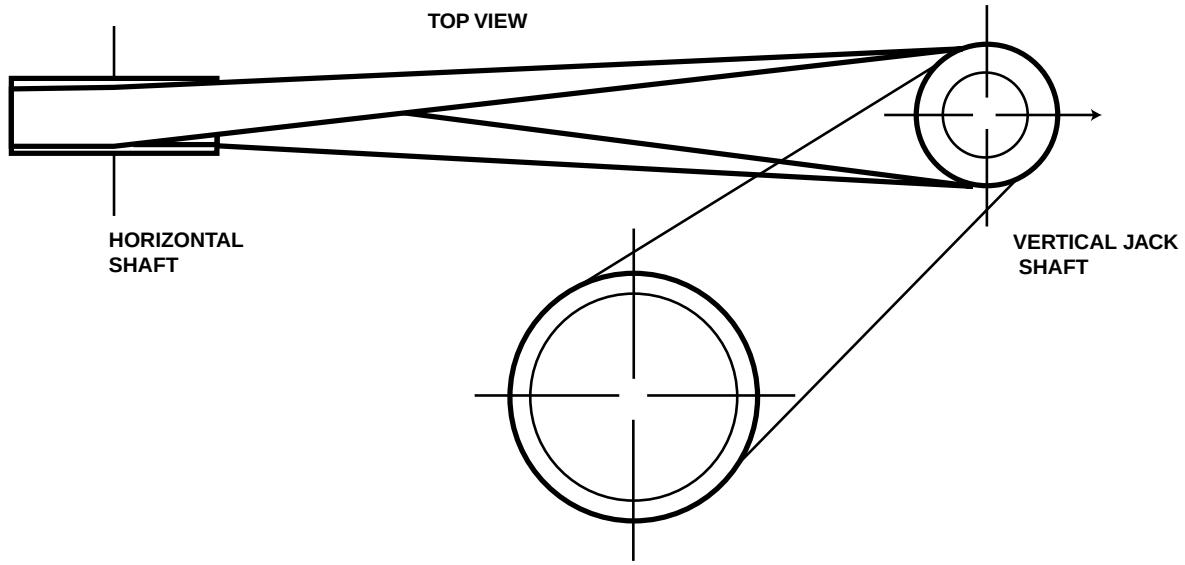

DETERMINING NON-STANDARD SHEAVE SIZES

INTRODUCTION

When the driven speed of an application is so critical that a non-standard sheave must be used to achieve the desired speed ratio, the following steps can be used to design a V-belt drive with a non-standard sheave for the required exact driven speed. To achieve the desired speed ratio, the smaller sheave (in the interest of economy) must be replaced with a made-to-order (MTO) sheave. If a minimum or maximum diameter for one of the sheaves is known, or if you have one sheave on hand, start with that diameter. If nothing limits the sheave diameters, start with a small sheave diameter in the larger end of the recommended diameter range. Sheaves on electric motors must be at least as large as the minimum recommended diameter.

Step 1

Determine the Pitch Diameter.

If the pitch (or datum) diameter of a sheave on hand is unknown, measure the outside diameter. Then subtract the value from the table below to find the desired diameter.

Note: The datum system is used for identifying classical V-belts and sheaves only (A, B, C, D). For these sheaves, the datum diameter is equal to the outside diameter.

Amount Subtracted from Outside Diameter to Find Pitch or Datum Diameter of a Grooved Sheave										
V-Belt Cross Section		3V (in.)	5V (in.)	8V (in.)	A* (in.)	B* (in.)	A (in.)	B (in.)	C (in.)	D (in.)
Standard Sheaves	Pitch	0.05	0.10	0.20	0.37	-0.01	0	0	0	0
	Datum	-	-	-	0.62	0.33	0.25	0.35	0.40	0.60
Deep Groove Sheaves	Pitch	0.268	0.420	0.724	-	-	-	0.36	0.61	0.83
	Datum	-	-	-	-	-	-	0.71	1.01	1.43

*Using a combination A/B sheave

Step 2

Calculate Sheave Rim Speed

$$\text{Sheave Rim Speed} = \frac{\text{(O.D. of either sheave) x (rpm of same sheave)}}{12 \div \pi}$$

Narrow Section sheaves are listed by O.D., while classical sheaves (A, B, C, D) are listed by datum diameter. To obtain O.D., add the appropriate value from the table above.

Sheave rim speeds should not exceed 6500 feet per minute. For speeds above 6500 feet per minute special sheaves are required.

Step 3

Multiply the pitch diameter of the small sheave by the speed ratio to get the pitch diameter of the large sheave. (Or divide the pitch diameter of the large sheave by the speed ratio to get the pitch diameter of the small sheave.) If you are designing with Narrow Section belts, convert pitch diameters to outside diameters and for classical section belts, convert pitch diameters to datum diameters. The table above can be used for conversion calculations.

Note: Pitch diameters are always used in speed ratio calculations.

Step 4

If the large sheave diameter is close to the diameter of a standard sheave, repeat Steps 2 & 3, starting with the standard sheave diameter. In this way only the small sheave will be non-stock, giving a more economical drive. Record the diameters chosen and the rim speed.

Step 5

Diameters should be as large as possible, keeping at or below the recommended maximum rim speed. A diameter to give a rim speed in the range of 4000 to 6000 feet per minute is preferred. Larger diameters mean higher horsepower ratings and fewer belts, resulting in a more economical drive. Be sure that the motor sheave is equal to or larger than the minimum recommended diameter.

Also larger diameters mean lower operating tensions, thereby decreasing shaft and bearing loads. Large diameters are not so important on more lightly loaded, normal speed drives where the cost of the larger diameter sheave (to obtain the preferred belt speed) may result in a less economical drive or in the use of one belt, which sacrifices multiple belt dependability. For large drives, it is usually best to check several designs for economics before making a final choice.

V-BELT TENSIONING

INTRODUCTION
Because V-belts operate on the friction principle, multiplied by the mechanical advantage of the wedging principle, proper tensioning of v-belts is the single most important factor necessary for long, satisfactory operation. Too little tension will result in slippage, causing rapid belt and sheave wear, and loss of productivity. Too much tension can result in excessive stress on belts, bearings, and shafts and reduced efficiency.

However, there is still a wide range of tension within which a drive will operate satisfactorily. It is the intent of this section to permit the engineer to find this proper range for any V-belt drive.

THE EFFECT OF TECHNOLOGY ON TENSIONING
Prior to 1956, V-belt tensioning was readily accomplished by simple procedures such as thumb pressure, slapping the belts, etc. Since that time. new materials, especially synthetic fibers, and new processes have permitted V-belt manufacturers to increase horsepower ratings. In addition, newer high capacity cross-sections (3V, 5V, 8V) have been introduced.

As horsepower ratings for individual belts were increased, and belt cross section became smaller, the number of belts on a drive were decreased, resulting in higher tensions per belt. It therefore has become increasingly difficult to judge proper tensioning by former thumb-pressure techniques.

To further complicate matters, the existence of older design and newer design drives in the same plant creates a multiple standard for tensioning. For example, a drive designed in 1955, equipped with today's higher rated V-belts, would in effect be over belted by 120%.

METHODS OF TENSIONING V-BELTS
It should be noted by the engineer, that the most precise way of determining proper V-belt tensions is by the "Formula Method" described on the following pages. However, recognizing that this method is sometimes impractical, we also offer the "General Method" and tables of average values. In most cases, these will prove adequate. In all cases, care should be exercised regarding sheave groove wear and alignment, as these factors play an important part in achieving the long, trouble-free service associated with V-belt drives.

GENERAL METHOD
A few simple rules should be followed to satisfy most drive requirements:

1. For installation, reduce the center distance so the belts may be placed in the sheave grooves without force. Arrange the belts so that both the top and bottom spans have about the same amount of sag. Apply tension to the belts by increasing the center distance until the belts are snug and have a live, springy action when struck with the hand.

2. Operate the drive a few minutes to seat the belts in the sheave grooves. Observe the operation of the drive under its highest load condition (usually starting). A slight bowing of the slack side of the drive indicates adequate tension. If the slack side remains taut during the peak load, the drive is too tight.

3. Check the tension on a new drive several times during the first 24 hours of operation, by observing the slack side span.

4. Keep the drive free of foreign material which might cause slippage or damage to the belt and sheave surfaces.

5. If a V-belt slips, it is too loose. Increase the tension by increasing the center distance. Never apply belt dressing, as this will damage the belt and cause early failure.

Table 29 Factors Table

Arc of Contact (degrees)	(D-d)/C	A	B	H	K	M	N (C_q)	O
180	0.000	—	1.000	2.000	24.750	1.000	1.00	0.75
179	0.017	57.297	1.000	2.000	24.843	1.000	1.00	0.75
178	0.035	28.649	1.000	2.000	24.937	1.000	1.00	0.76
177	0.052	19.101	1.000	1.999	25.032	1.000	0.99	0.76
176	0.070	14.327	0.999	1.999	25.129	0.999	0.99	0.76
175	0.087	11.463	0.999	1.998	25.227	0.999	0.99	0.76
174	0.105	9.554	0.998	1.997	25.326	0.999	0.99	0.77
173	0.122	8.190	0.998	1.996	25.427	0.998	0.98	0.77
172	0.140	7.168	0.997	1.995	25.529	0.998	0.98	0.77
171	0.157	6.373	0.996	1.994	25.632	0.997	0.9	0.77
170	0.174	5.737	0.996	1.992	25.737	0.996	0.98	0.77
169	0.192	5.217	0.995	1.991	25.844	0.995	0.97	0.78
168	0.209	4.783	0.994	1.989	25.952	0.995	0.97	0.78
167	0.226	4.417	0.993	1.987	26.061	0.994	0.97	0.78
166	0.244	4.103	0.992	1.985	26.172	0.993	0.97	0.78
165	0.261	3.831	0.991	1.983	26.285	0.992	0.96	0.79
164	0.278	3.593	0.990	1.981	26.399	0.990	0.96	0.79
163	0.296	3.383	0.988	1.978	26.515	0.989	0.96	0.79
162	0.313	3.196	0.987	1.975	26.633	0.988	0.96	0.79
161	0.330	3.029	0.986	1.973	26.752	0.987	0.95	0.80
160	0.347	2.879	0.984	1.970	26.873	0.985	0.95	0.80
159	0.364	2.744	0.983	1.967	26.996	0.984	0.95	0.80
158	0.382	2.620	0.981	1.963	27.120	0.982	0.95	0.80
157	0.399	2.508	0.979	1.960	27.247	0.980	0.94	0.81
156	0.416	2.405	0.977	1.956	27.375	0.979	0.94	0.81
155	0.433	2.310	0.975	1.953	27.505	0.977	0.94	0.81
154	0.450	2.223	0.973	1.949	27.638	0.975	0.93	0.81
153	0.467	2.142	0.971	1.945	27.772	0.973	0.93	0.81
152	0.484	2.067	0.969	1.941	27.908	0.971	0.93	0.82
151	0.501	1.997	0.967	1.936	28.046	0.969	0.93	0.82
150	0.518	1.932	0.965	1.932	28.187	0.967	0.92	0.82
149	0.534	1.871	0.962	0.927	28.329	0.965	0.92	0.82
148	0.551	1.814	0.960	1.923	28.474	0.963	0.92	0.83
147	0.568	1.760	0.957	1.918	28.621	0.961	0.91	0.83
146	0.585	1.710	0.954	1.913	28.771	0.959	0.91	0.83
145	0.601	1.663	0.952	1.907	28.922	0.956	0.91	0.83
144	0.618	1.618	0.949	1.902	29.076	0.954	0.91	0.83
143	0.635	1.576	0.946	1.897	29.233	0.952	0.90	0.84
142	0.651	1.536	0.943	1.891	29.392	0.949	0.90	0.84
141	0.668	1.498	0.940	1.885	29.553	0.947	0.90	0.84
Arc of Contact (degrees)	**(D-d)/C**	**A**	**B**	**H**	**K**	**M**	**N (C_q)**	**O**
140	0.684	1.462	0.936	1.879	29.718	0.944	0.89	0.84
139	0.700	1.428	0.933	1.873	29.884	0.942	0.89	0.84
138	0.717	1.395	0.930	1.867	30.054	0.939	0.89	0.85
137	0.733	1.364	0.926	1.861	30.226	0.936	0.88	0.85
136	0.749	1.335	0.922	1.854	30.402	0.934	0.88	0.85
135	0.765	1.307	0.919	1.848	30.580	0.931	0.88	0.85
134	0.781	1.280	0.915	1.841	30.761	0.928	0.87	0.85
133	0.797	1.254	0.911	1.834	30.945	0.925	0.87	0.86
132	0.813	1.229	0.907	1.827	31.132	0.923	0.87	0.86
131	0.829	1.206	0.903	1.820	31.323	0.920	0.86	0.86
130	0.845	1.183	0.898	1.813	31.516	0.917	0.86	0.86
129	0.861	1.161	0.894	1.805	31.713	0.914	0.86	0.86
128	0.877	1.141	0.889	1.798	31.914	0.911	0.85	0.85
127	0.892	1.121	0.885	1.790	32.118	0.908	0.85	0.85
126	0.908	1.101	0.880	1.782	32.325	0.905	0.84	0.84
125	0.939	1.065	0.870	1.766	32.752	0.899	0.84	0.84
123	0.954	1.048	0.864	1.758	32.970	0.896	0.83	0.83
122	0.970	1.031	0.859	1.749	33.193	0.893	0.83	0.83
121	0.985	1.015	0.853	1.741	33.420	0.890	0.83	0.83
120	1.000	1.000	0.847	1.732	33.651	0.887	0.82	0.82
119	1.015	0.985	0.841	1.723	33.886	0.884	0.82	0.82
118	1.030	0.971	0.835	1.714	34.126	0.880	0.81	0.81
117	1.045	0.957	0.829	1.705	34.370	0.877	0.81	0.81
116	1.060	0.944	0.822	1.696	34.618	0.874	0.81	0.81
115	1.075	0.931	0.815	1.687	34.871	0.871	0.80	0.80
114	1.089	0.918	0.808	1.677	35.130	0.868	0.80	0.80
113	1.104	0.906	0.801	1.668	35.393	0.865	0.79	0.79
112	1.118	0.894	0.793	1.658	35.661	0.861	0.79	0.79
111	1.133	0.883	0.785	1.648	35.934	0.858	0.79	0.79
110	1.147	0.872	0.776	1.638	36.213	0.855	0.78	0.78
109	1.161	0.861	0.767	1.628	36.497	0.852	0.78	0.78
108	1.176	0.851	0.757	1.618	36.787	0.849	0.77	0.77
107	1.190	0.841	0.747	1.608	37.083	0.845	0.77	0.77
106	1.204	0.831	0.736	1.597	37.385	0.842	0.77	0.77
105	1.218	0.821	0.724	1.587	37.693	0.839	0.76	0.76
104	1.231	0.812	0.710	1.576	38.008	0.836	0.76	0.76
103	1.245	0.803	0.694	1.565	38.328	0.833	0.75	0.75
102	1.259	0.795	0.675	1.554	38.656	0.830	0.75	0.75
101	1.272	0.786	0.644	1.543	38.991	0.826	0.74	0.74

V-BELT TENSIONING

(Continued)

Strand Deflection — Formula Method

This method is based on the fact that the force required to deflect a given span length by a given amount is related to the tension in the belt. (Note: If the drive uses banded V-belts, use "Belt Elongation Method." See page 294.

Step 1. Install the belts per rules 1 and 2 of the "General Method" discussed previously. Measure span length (t) in inches as shown in Figure 26, or calculate as follows:

$$t = \sqrt{C^2 - \left(\frac{D-d}{2}\right)^2}$$

Where:
t = span length, in inches
C = center distance, in inches
D = large sheave pitch diameter, in inches
d = small sheave pitch diameter, in inches

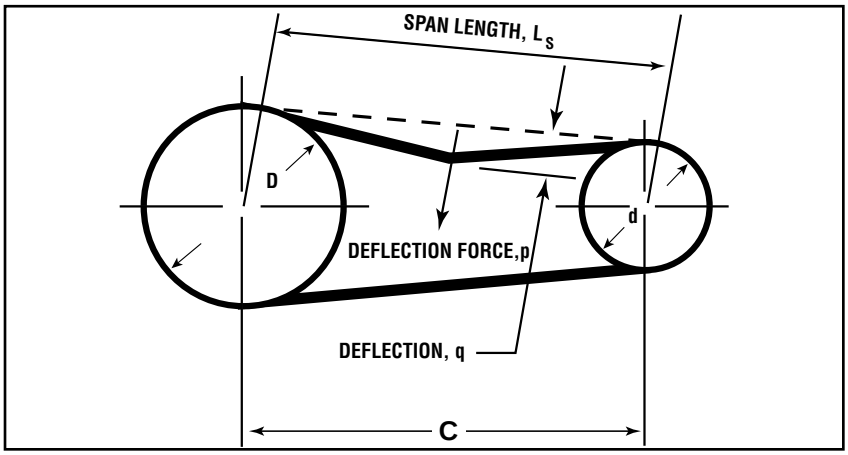

Figure 26 — BELT DEFLECTION DIAGRAM

Step 2. Calculate the deflection distance by: t/64 = deflection. Note from Figure 26 that the deflection distance is always 1/64″ per inch of span length (for example, a 32″ span length would require a deflection of 32/64 or 1/2 inch).

Step 3. Calculate the static strand tension (T_s) per belt by the following formula:

$$T_s = \frac{\text{Design HP} \times K}{Q \times S} + T_c$$

Where: K = value from Table 29 depending on value of $\frac{D - d}{C}$

Q = number of belts/ribs on drive
S = belt speed, feet per minute / 1000
T_c = add-on tension allowance for centrifugal force, from Table 31 on page 291.

Note: The value of T_s is for an individual V-belt. If a banded V-belt is used, refer to "Elongation Method."

Step 4. Calculate the recommended minimum and maximum deflection forces (P), in pounds:

$$P_{min} = \frac{T_s + Y}{16} \qquad P_{max} = \frac{(1.5 \times T_s) + Y}{16}$$

Where:
T_s = Static strand tension (from Step 3)
Y = Constant from Table 30 on page 289

TABLE 30 - FACTORS C_c & Y

BELT CROSS SECTION	Cc SINGLE BELTS	Cc BANDED BELTS	Y
A	0.72	-	6.00
AP	0.72	0.86	5.00
AK	0.74	-	9.00
AX	0.68	0.81	6.00
B	0.99	-	9.00
BP	1.09	1.36	8.00
BK	1.21	0	16.00
BX	0.95	1.17	9.00
C	2.09	-	18.00
CP	1.84	2.24	18.00
CK	2.09	-	24.00
CX	1.69	-	19.00
DP	3.65	4.19	28.00
DX	3.83	4.78	40.00
3VX	0.55	0.47	4.00
5VX/5V	1.25	1.32	11.00
8V	2.95	3.46	25.00
8VX	2.95	3.46	30.00

NOTE: For drives using only one belt, and at least one shaft is free to turn, use the following for the deflection forces (P):

$$P_{min} = \frac{T_s + \frac{t}{L}r}{16} \qquad P_{max} = \frac{(1.5xT_s) + \frac{t}{L}Y}{16}$$

Where: t = span length, inches (from step 1)
L = belt pitch length, inches
Y = constant from Table 30 above

STEP 5
Tension the V-belts by this procedure:

a) Using a Carlisle Tensiometer (part no. 102761), or other suitable spring scale, apply force to ONE belt of the drive, perpendicular to the span at its mid-point, as shown in figure 27. See Page 297 for the Tensiometer instructions.

b) Measure the deflecting force being applied when the belt has been deflected the distance calculated in Step 2 (use an adjacent belt as reference point; on single belt drives, use straight edge or taut string across sheaves). The measured force should be between the values of P_{min} and P_{max} calculated in Step 4. If the measured force is outside these values, adjust center distance to increase or reduce tension, and repeat above procedure. On multiple belt drives an average of readings on each belt is recommended.

NOTE: If new belts are being installed for the first time, it is permissible to tension as much as 1.33 x P_{max} to allow for initial stretch and seating in the grooves.

STEP 6
During the first 24 hours of operation, it is advisable to repeat the procedure in Step 5 at least once.

Example of Determining Tension by Formula Method

Given drive parameters:
Driven HP = 25
Driver = 6 groove, C section, 10.0” p.d. (@ 1750 RPM)
Driven = 6 groove, C section, 30.0” p.d.
Belts = 6 CP162 Super Blue Ribbon
Center Distance = 50.0”

STEP 1
Measure span length (t), or calculate as:

$$t = \sqrt{C^2 - \left(\frac{D-d}{2}\right)^2} =$$

$$t = \sqrt{(50)^2 - \left(\frac{30-10}{2}\right)^2} = 49.0”$$

STEP 2
Calculate deflection distance: t = **49/64”**

STEP 3
To find Static Strand Tension (Ts), first calculate:

$$S\ (\text{fpm}/1000) = \frac{10 \times 1750 \times .262}{1000} = \mathbf{4.585}$$

$$\frac{D\text{-}d}{C} = \frac{30\text{-}10}{50} = \mathbf{0.4}$$

and find factor K from Table 29 on Page 287.
K = 27.257 (interpolating)

$$T_s = \frac{\text{Design Horspowerx } K}{QxS} + T_c \quad \text{(from Table 31)} \quad = \frac{125 \times 27.257}{6 \times 4.585} + 20.8 = \mathbf{144.7\ lbs.}$$

V-BELT TENSIONING (Continued)

STEP 4
Calculate minimum and maximum deflection forces:

$$\text{Pmin} = \frac{T_s + Y}{16} = \frac{144.7 + 16}{16} = \textbf{10 lbs.}$$

$$\text{Pmax} = \frac{(1.5 \text{ x } Ts) + Y}{16} = \frac{217.1 + 16}{16} = \textbf{14.6 lbs.}$$

STEP 5
Belts are tensioned at deflection distance of 49/64” until force readings are between 10 and 15 lbs. If belts are new, between 15 and 20 lbs.)

ALTERNATE FORMULA FOR FINDING STRAND TENSION (T_s):

$$Ts = 16.5 \left(\frac{2.5 - N}{N}\right) \left(\frac{\text{Design HP}}{Q \text{ x } S}\right) + \frac{C_c \text{ x } S^2}{2}$$

Where: N = Arc Correction Factor, Table 29
Q = Number of belts on drive
Cc = Centrifugal constant from Table 30
S = Belt speed, feet per minute/1000

TABLE 31 - Tc CENTRIFUGAL TENSION ADD-ON VALUES FOR CALCULATING STATIC STRAND TENSION (Ts) OF INDIVIDUAL V-BELTS. (FOR BANDED BELTS SEE TABLE 32)

S fpm 1000	POWER-WEDGE COG-BELT			SUPER POWER WEDGE		SUPER BLUE RIBBON & ARAMAX				GOLD LABEL COG & SUPER II			
	3VX	5VX	8VX	5V	8V	AP AK	BP BK	CP CK	DP	AX A	BX B	CX C	DX D
0.50	0.05	0.13	0.44	0.15	0.41	0.08	0.13	0.25	0.47	0.08	0.13	0.22	0.50
0.75	0.11	0.30	0.98	0.34	0.92	0.19	0.30	0.56	1.05	0.17	0.28	0.50	1.12
1.00	0.19	0.54	1.74	0.61	1.64	0.33	0.54	0.99	1.87	0.31	0.50	0.89	1.98
1.25	0.30	0.84	2.72	0.96	2.56	0.52	0.84	1.54	2.92	0.48	0.78	1.39	3.10
1.50	0.44	1.21	3.92	1.38	3.69	0.75	1.21	2.22	4.20	0.69	1.13	2.00	4.46
1.75	0.59	1.65	5.34	1.88	5.02	1.02	1.65	3.03	5.72	0.94	1.53	2.72	6.08
2.00	0.78	2.16	6.97	2.45	6.56	1.33	2.16	3.95	7.47	1.23	2.00	3.55	7.94
2.25	0.98	2.73	8.82	3.10	8.30	1.68	2.73	5.00	9.46	1.55	2.53	4.50	10.05
2.50	1.21	3.37	10.89	3.83	10.24	2.08	3.37	6.17	11.67	1.91	3.13	5.55	12.40
2.75	1.47	4.08	13.18	4.63	12.40	2.51	4.08	7.47	14.12	2.32	3.78	6.72	15.01
3.00	1.75	4.85	15.68	5.51	14.75	2.99	4.85	8.89	16.81	2.76	4.50	8.00	17.86
3.25	2.05	5.70	18.41	6.47	17.31	3.51	5.70	10.43	19.73	3.23	5.29	9.39	20.96
3.50	2.38	6.61	21.35	7.50	20.08	4.07	6.61	12.10	22.88	3.75	6.13	10.89	24.31
3.75	2.73	7.58	24.51	8.61	23.05	4.67	7.58	13.89	26.27	4.31	7.04	12.50	27.90
4.00	3.11	8.63	27.88	9.80	26.23	5.31	8.63	15.80	29.88	4.90	8.01	14.22	31.75
4.25	3.51	9.74	31.48	11.06	29.61	6.00	9.74	17.84	33.74	5.53	9.04	16.05	35.84
4.50	3.93	10.92	35.29	12.40	33.19	6.73	10.92	20.00	37.82	6.20	10.13	17.99	40.18
4.75	4.38	12.17	39.32	13.82	36.98	7.49	12.17	22.29	42.14	6.91	11.29	20.05	44.77
5.00	4.85	13.48	43.57	15.31	40.98	8.30	13.48	24.69	46.69	7.66	12.51	22.21	49.61
5.25	5.35	14.86	48.03	16.88	45.18	9.15	14.86	27.23	51.48	8.44	13.79	24.49	54.69
5.50	5.87	16.31	52.72	18.53	49.58	10.05	16.31	29.88	56.50	9.26	15.14	26.88	60.02
5.75	6.42	17.83	57.62	20.25	54.19	10.98	17.83	32.66	61.75	10.13	16.54	29.38	65.60
6.00	6.99	19.41	62.74	22.05	59.01	11.96	19.41	35.56	67.24	11.03	18.01	31.99	71.43
6.25	7.58	21.06	68.07	23.93	64.03	12.97	21.06	38.59	72.96	11.96	19.55	34.71	77.51
6.50	8.20	22.78	73.63	25.88	69.25	14.03	22.78	41.73	78.91	12.94	21.14	37.54	83.83
6.75	8.84	24.57	79.40	27.91	74.68	15.13	24.57	45.01	85.10	13.95	22.80	40.49	90.41
7.00	9.51	26.42	85.39	30.01	80.32	16.27	26.42	48.40	91.52	15.01	24.52	43.54	97.23

NOTE: When value of S is greater than 6.00, special sheaves and/or dynamic balancing may be necessary. See Page 236

TABLE 32 - Tc CENTRIFUGAL TENSION ADD-ON VALUES FOR CALCULATING STATIC STRAND TENSION (Ts) OF BANDED V-BELTS. (FOR INDIVIDUAL V-BELTS SEE TABLE 31)

S fpm	Wedge-Band			Super Vee-Band			Gold Label Cog-Band		
1000	R3V	R5V	R8V	RBP	RCP	RDP	RBX	RCX	RDX
0.50	0.06	0.16	0.47	0.17	0.29	0.54	0.16	0.26	0.57
0.75	0.14	0.37	1.07	0.39	0.66	1.21	0.36	0.59	1.28
1.00	0.25	1.03	2.97	1.08	1.82	3.35	1.00	1.64	3.56
1.25	0.40	1.03	2.97	1.08	1.82	3.35	1.00	1.64	3.56
1.50	0.57	1.48	4.27	1.55	2.62	4.82	1.44	2.36	5.12
1.75	0.78	2.02	5.81	2.11	3.57	6.57	1.96	3.21	6.97
2.00	1.02	2.64	7.59	2.76	4.66	8.58	2.55	4.19	9.11
2.25	1.29	3.34	9.61	3.49	5.90	10.85	3.23	5.31	11.53
2.50	1.59	4.12	11.86	4.31	7.28	13.40	3.99	6.55	14.23
2.75	1.92	4.99	14.35	5.22	8.81	16.21	4.83	7.93	17.22
3.00	2.29	5.94	17.08	6.21	10.48	19.29	5.75	9.43	20.50
3.25	2.69	6.97	20.05	7.29	12.30	22.64	6.74	11.07	24.06
3.50	3.12	8.08	23.25	8.45	14.27	26.26	7.82	12.84	27.90
3.75	3.58	9.28	26.69	9.71	16.38	30.15	8.98	14.74	32.03
4.00	4.07	10.56	30.37	11.04	18.63	34.30	10.21	16.77	36.44
4.25	4.60	11.92	34.28	12.47	21.04	38.72	11.53	18.93	41.14
4.50	5.15	13.36	38.43	13.98	23.58	43.41	12.93	21.23	46.12
4.75	5.74	14.89	42.82	15.57	26.28	48.37	14.40	23.65	51.39
5.00	6.36	16.50	47.45	17.25	29.12	53.60	15.96	26.20	56.94
5.25	7.01	18.19	52.31	19.02	32.10	59.09	17.69	28.89	62.77
5.50	7.70	19.96	57.41	20.88	35.23	64.85	19.31	31.71	68.90
5.75	8.41	21.82	62.75	22.82	38.51	70.88	21.11	34.66	75.30
6.00	9.16	23.76	68.33	24.85	41.93	77.18	22.98	37.73	81.99
6.25	9.94	25.78	74.14	26.96	45.49	83.74	24.94	40.94	88.97
6.50	10.75	27.88	80.19	29.16	49.21	90.58	26.97	44.29	96.23
6.75	11.60	30.07	86.47	31.45	53.06	97.68	29.09	47.76	103.77
7.00	12.47	32.34	93.00	33.82	57.07	105.05	31.28	51.36	111.60

NOT

When value of S is greater than 6.00, special sheaves and/or dynamic balancing may be necessary - see Page 236.

AVERAGE TENSIONING TABLES
(Page 293)

Although the Formula Method is recommended for the most accurate means of determining V-Belt tension, Table 33 may be used satisfactorily for most drives. However, these values are based on drives which are designed using recommended procedures and ratings in this catalog for the belt types and cross-sections indicated in the tables. They do NOT, for example, consider drives originally designed for wrapped-type belts, which are later upgraded to the premium Power-Wedge Cog-Belt or Gold Label Cog-Belt. In these cases, where known, the values for the wrapped-type Super Power-Wedge or Super Blue Ribbon should be used.

Failure to observe these limitations of the tables may result in excessive loads on bearings and/or shafts.

V-BELT TENSIONING (Continued)

TABLE 33 AVERAGE TENSIONING VALUES (RECOMMENDED MINIMUM FORCE PER BELT)

V-Belt Type	V-Belt Section	Small Sheave		Deflection Force for Drive Speed Ratio (lbs.)			
		Speed Range	Diameter	1.00	1.5	2.0	4.0 & over
Super II Aramax Super Blue Ribbon	A AP AK	1800-3600	3.0	2.0	2.3	2.4	3.3
		1800-3600	4.0	2.6	2.8	3.0	3.3
		1800-3600	5.0	3.0	3.3	3.4	3.7
		1800-3600	7.0	3.5	3.7	3.8	4.3
	B BP BK	1200-1800	4.6	3.7	4.3	4.5	5.0
		1200-1800	5.0	4.1	4.6	4.8	5.6
		1200-1800	6.0	4.8	5.3	5.5	6.3
		1200-1800	8.0	5.7	6.2	6.4	7.2
	C CP CK	900-1800	7.0	6.5	7.0	8.0	9.0
		900-1800	9.0	8.0	9.0	10.0	11.0
		900-1800	12.0	10.0	11.0	12.0	13.0
		700-1500	16.0	12.0	13.0	13.0	14.0
	DP	900-1500	12.0	13.0	15.0	16.0	17.0
		900-1500	15.0	16.0	18.0	19.0	21.0
		700-1200	18.0	19.0	21.0	22.0	24.0
		700-1200	22.0	22.0	23.0	24.0	26.0
Gold Label Cog Belt	AX	1800-3600	3.0	2.5	2.8	3.0	3.3
		1800-3600	4.0	3.3	3.6	3.8	4.2
		1800-3600	5.0	3.7	4.1	4.3	4.6
		1800-3600	7.0	4.3	4.6	4.8	5.3
	BX	1200-1800	4.6	5.2	5.8	6.0	6.9
		1200-1800	5.0	5.4	6.0	6.3	7.1
		1200-1800	6.0	6.0	6.4	6.7	7.7
		1200-1800	8.0	6.6	7.1	7.5	8.2
	CX	900-1800	7.0	10.0	11.0	12.0	13.0
		900-1800	9.0	11.0	12.0	13.0	14.0
		900-1800	12.0	12.0	13.0	13.0	14.0
		700-1500	16.0	13.0	14.0	14.0	15.0
	DX	900-1500	12.0	16.0	18.0	19.0	20.0
		900-1500	15.0	19.0	21.0	22.0	24.0
		700-1200	18.0	22.0	24.0	25.0	27.0
		700-1200	22.0	25.0	27.0	28.0	30.0
Power-Wedge Cog-Belt	3VX	1200-3600	2.2	2.2	2.5	2.7	3.0
		1200-3600	2.5	2.6	2.9	3.1	3.6
		1200-3600	3.0	3.1	3.5	3.7	4.2
		1200-3600	4.1	3.9	4.3	4.5	5.1
		1200-3600	5.3	4.6	4.9	5.1	5.7
		1200-3600	6.9	5.0	5.4	5.6	6.2
	5VX	1200-3600	4.4	6.5	7.5	8.0	9.0
		1200-3600	5.2	8.0	9.0	9.5	10.0
		1200-3600	6.3	9.5	10.0	11.0	12.0
		1200-3600	7.1	10.0	11.0	12.0	13.0
		900-1800	9.0	12.0	13.0	14.0	15.0
		900-1800	14.0	14.0	15.0	16.0	17.0
	8VX	900-1800	12.5	18.0	21.0	23.0	25.0
		900-1800	14.0	21.0	23.0	24.0	28.0
		700-1500	17.0	24.0	26.0	28.0	30.0
		700-1200	21.2	28.0	30.0	32.0	34.0
		400-1000	24.8	31.0	32.0	34.0	36.0
Super Power-Wedge	5V	900-1800	7.1	8.5	9.5	10.0	11.0
		900-1800	9.0	10.0	11.0	12.0	13.0
		900-1800	14.0	12.0	13.0	14.0	15.0
		700-1200	21.2	14.0	15.0	16.0	17.0
	8V	900-1800	12.5	18.0	21.0	23.0	25.0
		900-1800	14.0	21.0	23.0	24.0	28.0
		700-1500	17.0	24.0	26.0	28.0	30.0
		700-1200	21.2	28.0	30.0	32.0	34.0
		400-1000	24.8	31.0	32.0	34.0	36.0

USE OF TABLES
(NOTE: For banded V-Belts, Use the Elongation Method)

STEP 1
Install the belts per rules 1 and 2 of the “General Method” discussed previously. Measure span length (t) in inches, or calculate per “Formula Method”.

STEP 2
Calculate the deflection distance by t/64 = deflection.

STEP 3
Depending on the belt type and cross section, and the small sheave diameter and speed, locate the Minimum Deflection Force (Pmin) in the appropriate drive ratio column of Table 33 on Page 293. For intermediate diameters or ratios, use interpolation.

Maximum Deflection Force = 1.5 x minimum (for new belts, 2.0 x Minimum can be used.)

STEP 4
Tension belts per Steps 5 & 6 of “Formula Method”. When using Carlisle Tensiometer (part no. 102761) see instructions on page 297.

ELONGATION METHOD
This method is recommended for tensioning Super Vee-Band, Wedge-Band and Gold Label Cog-Band drives where larger deflection forces make the use of other methods impractical.

Because belt elongation is related to the tension causing it, tape-measured lengths, both slack and tight, can be used to obtain proper Vee-Band tension.

VEE-BAND INSTALLATION AND TENSIONING PROCEDURE

STEP 1
Check sheaves to make sure they are properly aligned and that the grooves are not excessively worn (they should not be dished out more than 1/64”).

STEP 2
Decrease the center distance until the Vee-Band(s) can be easily slipped into the sheave grooves. Forcing the belts on can damage the load-carrying cords and cause premature failure.

STEP 3
With the Vee-Band(s) still on the drive at no tension,tape their outside circumference (slack O.C.).

NOTE: If you are tensioning a used belt, decrease the center distance until there is no tension on it; then tape the outside circumference.

V-BELT TENSIONING (Continued)

STEP 4
Find the required static tension (Ts) per individual strand (rib) using the formula:

$$Ts = \frac{\text{Design HP x K}}{\text{Q x S}} + T_c$$

Where: K = value from table 29 on Page 287 depending on $\frac{D\text{-}d}{C}$

Q = number of belts
S = belt speed, fpm/1000
Tc = add-on tension allowance for centrifugal force (See Table 32)

STEP 5
Find a range of recommended Static Strand Tensions:
Lower value = Ts (from Step 4)
Upper value = 1.5 x Ts

STEP 6
Calculate minimum and maximum elongation band lengths for use in tensioning drive:
a. From table 34, find length multipliers corresponding to the lower and upper values of Ts in Step 5.
b. Multiply the slack O.C. found in Step 3 by the multipliers to find the minimum and maximum elongated band lengths.

STEP 7
Increase the drive center distance until a tape measurement of the band(s) O.C. is between the two values calculated for elongated band lengths in Step 6(b).

STEP 8
Re-tension as required. A new Vee-Band may lose tension rapidly during the run-in period and will probably need re-tensioning. A Vee-Band that has been on a drive for some time may also require re-tensioning due to tension decay from normal use and wear.

V-BELT TENSIONING (Continued)

TABLE 34 BELT LENGTH MULTIPLIERS FOR TENSIONING BANDED V-BELTS BY THE ELONGATION METHOD

Ts	Wedge-Band					Super Vee-Band					Gold Label Cog-Band			
Per	R3VX	R5V		R8V		RBP		RCP		RDP	RBX	RCX	RCX	RDX
Strand	All	R5XV	R5V	R8VX	R8V	RBP144	over	RCP144	over	All	All	up thru	over	All
(lbs.)						& under	RBP144	& under	RCP144			RBX210	CX210	
10	1.0012	1.0007	1.0006	1.0003	1.0007	1.0006	1.0007	1.0005	1.0007	1.0004	1.0006	1.0005	1.0008	1.0007
12	1.0014	1.0009	1.0008	1.0004	1.0009	1.0008	1.0009	1.0006	1.0008	1.0005	1.0008	1.0006	1.0008	1.0008
14	1.0016	1.0010	1.0009	1.0004	1.0010	1.0009	1.0011	1.0007	1.0009	1.0006	1.0009	1.0007	1.0011	1.0010
16	1.0019	1.0011	1.0010	1.0005	1.0011	1.0010	1.0012	1.0008	1.0011	1.0007	1.0010	1.0008	1.0012	1.0011
18	1.0021	1.0013	1.0012	1.0005	1.0013	1.0012	1.0014	1.0009	1.0012	1.0008	1.0012	1.0009	1.0014	1.0012
20	1.0023	1.0014	1.0013	1.0006	1.0014	1.0013	1.0016	1.0010	1.0013	1.0009	1.0003	1.0010	1.0015	1.0014
24	1.0028	1.0017	1.0016	1.0007	1.0017	1.0016	1.0019	1.0012	1.0016	1.0010	1.0015	1.0012	1.0018	1.0017
32	1.0038	1.0023	1.0021	1.0009	1.0022	1.0021	1.0027	1.0016	1.0021	1.0014	1.0021	1.0015	1.0024	1.0022
36	1.0042	1.0026	1.0023	1.0011	1.0025	1.0024	1.0031	1.0018	1.0024	1.0016	1.0023	1.0017	1.0026	1.0024
40	1.0047	1.0029	1.0026	1.0012	1.0028	1.0026	1.0035	1.0020	1.0026	1.0017	1.0026	1.0019	1.0029	1.0027
45	1.0053	1.0032	1.0029	1.0013	1.0031	1.0030	1.0040	1.0023	1.0030	1.0019	1.0029	1.0022	1.0033	1.0030
50	1.0060	1.0036	1.0033	1.0015	1.0034	1.0033	1.0046	1.0025	1.0033	1.0022	1.0032	1.0024	1.0036	1.0033
55	1.0066	1.0039	1.0036	1.0016	1.0037	1.0036	1.0052	100.28	1.0036	1.0024	1.0036	1.0027	1.0039	1.0037
60	1.0072	1.0043	1.0039	1.0018	1.0040	1.0040	1.0058	1.0030	1.0039	1.0026	1.0039	1.0029	1.0043	1.0040
65	1.0079	1.0047	1.0043	1.0019	1.0044	1.0043	1.0064	1.0033	1.0043	1.0028	1.0042	1.0032	1.0046	1.0043
70	1.0085	1.0050	1.0046	1.0021	1.0047	1.0047	1.0071	1.0035	1.0046	1.0031	1.0046	1.0035	1.0049	1.0046
75	1.0092	1.0054	1.0049	1.0022	1.0050	1.0050	1.0077	1.0038	1.0049	1.0033	1.0049	1.0037	1.0053	1.0049
80	1.0098	1.0058	1.0053	1.0024	1.0053	1.0054	1.0084	1.0040	1.0052	1.0035	1.0052	1.0040	1.0056	1.0052
85	1.0105	1.0061	1.0056	1.0025	1.0056	1.0057	1.0092	1.0043	1.0055	1.0037	1.0056	1.0042	1.0059	1.0055
90	1.0111	1.0065	1.0060	1.0027	1.0059	1.0061	1.0099	1.0045	10..58	1.0040	1.0059	1.0045	1.0062	1.0058
95	1.0118	1.0069	1.0063	1.0028	1.0062	1.0065	1.0106	1.0048	1.0062	1.0042	1.0062	1.0048	1.0065	1.0060
100	1.0125	1.0072	1.0066	1.0030	1.0065	1.0068	1.0114	1.0050	1.0065	1.0044	1.0066	1.0050	1.0068	1.0063
120	1.0152	1.0087	1.0080	1.0035	1.0076	1.0083	1.0147	1.0061	1.0077	1.0053	1.0079	1.0061	1.0080	1.0074
140	1.0181	1.0102	1.0094	1.0041	1.0087	1.0098	1.0183	1.0071	1.0090	1.0063	1.0093	1.0072	1.0091	1.0085
160	1.0210	1.0117	1.0109	1.0047	1.0097	1.0113	1.0221	1.0082	1.0102	1.0072	1.0107	1.0083	1.0102	1.0095
180	1.0240	1.0133	1.0123	1.0053	1.0107	1.0129	1.0263	1.0092	1.0114	1.0082	1.0121	1.0094	1.0112	1.0104
200	1.0271	1.0148	1.0138	1.0059	1.0116	1.0145	1.0307	1.0103	1.0126	1.0092	1.0136	1.0106	1.0122	1.0114
240	10.336	1.0179	1.0168	1.0071	1.0134	1.078	1.0402	1.0125	1.0150	1.0112	1.0165	1.0129	1.0140	1.0131
280	1.0404	1.0211	1.0198	1.0083	1.0150	1.0213	1.0505	1.0149	1.0174	1.0132	1.0195	1.0154	1.0158	1.0146
320	1.0475	1.0243	1.0229	1.0095	1.0165	1.0249	-	1.0174	1.0198	1.0153	1.0225	10.179	1.0174	1.0161
360	1.0550	1.0276	1.0261	1.0106	1.0179	1.0286	-	1.0200	1.0222	1.0175	1.0256	1.0206	1.0190	1.0175
400	-	1.0309	1.0294	1.0118	1.0193	1.0325	-	1.0228	1.0246	1.0197	1.0288	1.0233	1.0206	1.0187
450	-	1.0351	1.0366	1.0133	1.0209	1.0375	-	1.0266	1.0277	10.226	1.0329	10.268	1.0226	1.0202
500	-	1.0394	1.0379	10.148	1.0224	1.0428	-	1.0307	1.0309	1.0255	1.0370	1.0304	1.0247	1.0217
550	-	1.0438	1.0423	1.0163	1.0240	1.0482	-	1.0352	1.0343	1.0285	1.0413	1.0342	1.0269	1,9231
600	-	1.0482	1.0468	1.0177	1.0256	1.0539	-	1.0401	1.0377	1.0316	1.0457	1.0381	1.0293	1.0246
650	-	1.0528	1.0513	1.0192	1.0273	-	-	1.0455	1.0414	1.0348	1.0501	1.0421	1.0320	1.0261
700	-	-	-	1.0207	1.0291	-	-	1.0514	1.0452	1.0381	-	1.0463	1.0350	1.0277
750	-	-	-	1.0222	1.0311	-	-	-	1.0493	1.0414	-	1.0506	1.0384	1.0294
800	-	-	-	1.0237	1.033	-	-	-	1.0536	1.0449	-	-	1.0423	1.0313
850	-	-	-	1.0251	1.0357	-	-	-	-	1.0484	-	-	1.0466	1.0334
900	-	-	-	1.0266	1.0384	-	-	-	-	1.0520	-	-	1.0516	1.0358
950	-	-	-	1.0281	.10414	-	-	-	-	-	-	-	-	1.0385
1000	-	-	-	1.0296	1.0448	-	-	-	-	-	-	-	-	1.0414

INSTRUCTIONS FOR USING THE CARLISLE V-BELT TENSIOMETER

Procedure

1. Measure the span length of the drive. (See Figure 27).
Set the large “O” ring at 1/64″ for each inch of belt span. For example, set the large “O” ring 1/4″ for a span length of 16″, at 1/2″ for a span length of 32″, at 1″ for a span length of 64″ etc.

2. Set the small “O” ring at zero and press down the Carlisle Tensiometer at the center of the belt span (See Figure 28).

a. On a single belt drive, depress the Tensiometer until the large “O” ring is even with the bottom of a straight edge placed on the outside rims of the two sheaves.

b. On a multiple belt drive, depress the Tensiometer until the large “O” ring is even with the top of the next belt. Measure each belt in the drive. and take the average reading of all belt tensions as explained below.

3. Remove the Tensiometer, and observe that the small “O” ring has moved from its original setting at zero to the number of pounds required to deflect the belt to the extent noted above.

4. Check this reading against the value of P_{min} and P_{max} calculated in Step 4 of “Formula Method” or from Table 33.

$$t = \sqrt{C^2 - \left(\frac{D-d}{2}\right)^2} \qquad h = \frac{t}{64}$$

Where:
t = Span length, inches
C = Center distance, inches
D = Larger sheave diameter
d = Smaller sheave diameter, inches

*Deflection height h = 1/64 per inch of span

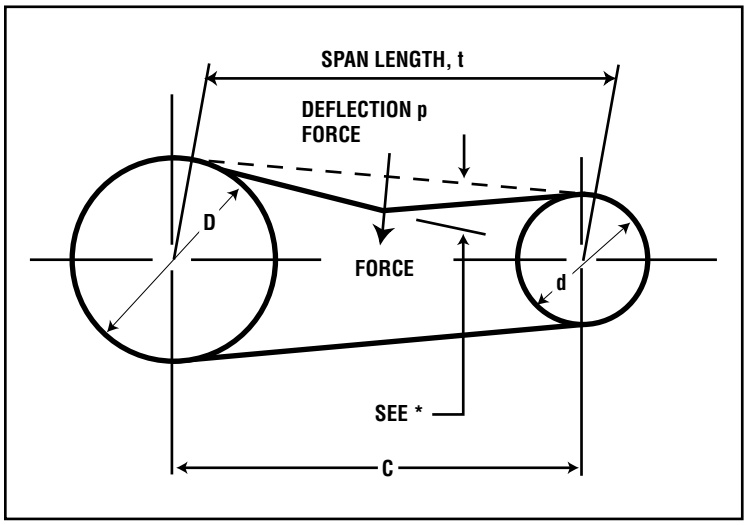

Figure 27 MEASURING DEFLECTION FORCE

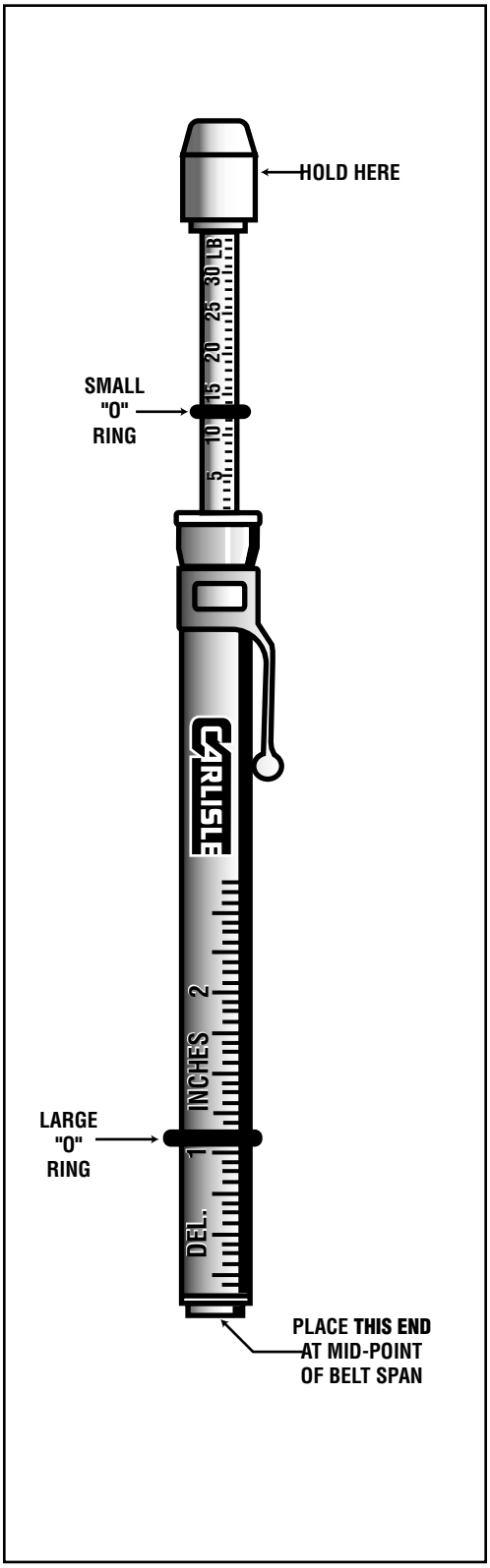

Figure 28 V-BELT TENSIOMETER (Part No. 102761)

DETERMINATION OF HUB LOAD

Introduction and Procedure

Hub load and true belt pull resultant force load is defined as the resultant of the belt tensions along the drive center line. It can be used to determine the true belt pull resultant force and direction.

Step 1. Determine the static strand tension.

$$T_s = \frac{K \times \text{Design HP}}{Q \times S} + T_c$$

Where K = Value opposite $\frac{D - d}{C}$ in Table 29 on page 287.

Q = number of belts on drive
S = belt speed in fpm/1000
T_c = "add-on" tension opposite S in Tables 31 or 32.

Step 2. Determine the hub load along the drive center line.

Hub load along drive center line = $T_s \times Q \times$ Factor H.

Where: H = Value opposite $\frac{D - d}{C}$ in Table 29 on page 287.

Q = number of belts on drive

The direction of the true belt pull is given by the angle (F) it makes with the drive center line. Angle (F) is always toward the tight side strand. Angle (F) is found from the following relation:

Step 3.

$$F = \tan^{-1}\left[\frac{P}{2T_s \times Q} \times \tan\left(90 - \frac{\text{Arc of Contact}}{2}\right)\right]$$

Where: P = effective pull $\left(\frac{33{,}000 \times HP}{V}\right)$

T_s = static strand tension (determined in Step 1)
Q = number of belts on drive
Tan^{-1} means, the angle whose tangent is ...

Step 4. The magnitude of the true belt pull resultant force is given by the following relation.

$$\text{Resultant force} = \frac{\text{Hub Load}}{\text{Cos F}}$$

Where: Hub load = value determined from Step 2.
Cos F = cosine of angle F

True belt pull and resultant force and direction may also be determined by making a layout to a convenient scale, measuring the value of the resultant, and the angle it makes with the center line of the drive. The following example problem shows the solution by both methods.

DETERMINATION OF HUB LOAD

(Continued)

The Problem

Find Hub Load for locked center drive with the following conditions:

Motor Sheave	(d)	=	5.6″
Driven Sheave	(D)	=	24.6″
No. of Belts	(Q)	=	6(AP90)
Center Distance	(C)	=	19.6″
Belt Speed	(V)	=	5.131 FPM/1000
Design HP		=	42.0 HP

The Solution: (Formula Method)

Obtain Hub Load and True Belt Pull Resultant Force

$$T_s = \frac{K \times \text{Design HP}}{Q \times S} + T_c$$

Calculate $\frac{D - d}{C} = \frac{24.6 - 5.6}{19.6} = 0.97$ (Arc = 104˚)

K = 38.008 from Table 29

T_c = 8.7 lbs. from Table 31 opposite S, by interpolation

Step 1.

$$T_s = \frac{38.008 \times 42}{6 \times 5.131} + 8.7 = 60.55 \text{ lbs.}$$

Step 2.

Hub load along center line = $T_s \times Q \times$ Factor H

Factor H = 1.576 from Table 29 by interpolation

Hub Load = 60.55 x 61.576 = 572.5 lbs.

Step 3.

$$F = \tan^{-1}\left[\frac{P}{2T_s \times Q} \times \tan\left(90^\circ - \frac{\text{Arc of Contact}}{2}\right)\right]$$

$$F = \tan^{-1}(.37173 \times .78129)$$

$$F = \tan^{-1}(.29043) = 16^\circ \text{ (rounding)}$$

Step 4.

$$\text{True Belt Pull Resultant Force} = \frac{\text{Hub Load}}{\text{Cos F}}$$

$$\text{Resultant Force} = \frac{572.6}{.961262} = 595.7 \text{ lbs.}$$

DETERMINATION OF HUB LOAD

(Continued)

The Solution: (Force Diagram Method)

Step 1.

Determine effective pull (P) from formula:

$$P = \frac{33 \times HP}{S}$$

Therefore, $P = \frac{33 \times 42.0}{5.131} = 270.1$ lbs.

Step 2.

Determine the arc of contact on small sheave and Factor N.

Calculate $\frac{D - d}{C}$

$$\frac{24.6 - 5.6}{19.6} = .97$$

From Table 29 find opposite $\frac{D - d}{C}$

arc of contact = 104˚, Factor N = .76

Step 3.

Determine $t_1 = P\left(\frac{1.25}{N}\right) = 270.1\left(\frac{1.25}{.76}\right) = 444.2$ lbs.

Step 4.

Determine $t_2 = P\left(\frac{1.25 - N}{N}\right) = 270.1\left(\frac{1.25 - .76}{.76}\right) = 174.1$ lbs.

Step 5.

Obtain t_c (add-on tension) from Table 31 or 32 opposite S.

Interpolation of values in A cross-section column result in t_c = 8.7 lbs. per belt.

For a 6 belt drive: $t_c = 6 \times 8.7 = 52.2$ lbs.

Add t_c to tight side and slack side tensions:

$t_1m = t_1 + t_c = 444.2 + 52.2 = 496.4$ lbs.

$t_2m = t_2 + t_c = 174.1 + 52.2 = 226.3$ lbs.

Where:

t_1 = tight side tension

t_2 = slack side tension

t_1m = tight side tension in motion

t_2m = slack side tension in motion

DETERMINATION OF HUB LOAD

(Continued)

Step 6.

Lay out force diagram to scale as shown in Figure 30. Figure 29 shows relationship to actual drive conditions.

1. Construct line AB parallel to t_1m and lay off an amount equal to 496 lbs. to any convenient scale.
2. At point 'B', draw a line BC parallel to t_2m and scale an amount equal to 226 lbs.
3. The resultant belt pull force can then be measured on line AC. (596 lbs.)
4. Construct line AD parallel to t_2m. Bisect the angle between AD and AB to draw the drive center line.
5. Measure the angle between the drive center line and AC to determine the direction of the resultant force with respect to the center line. (16˚)

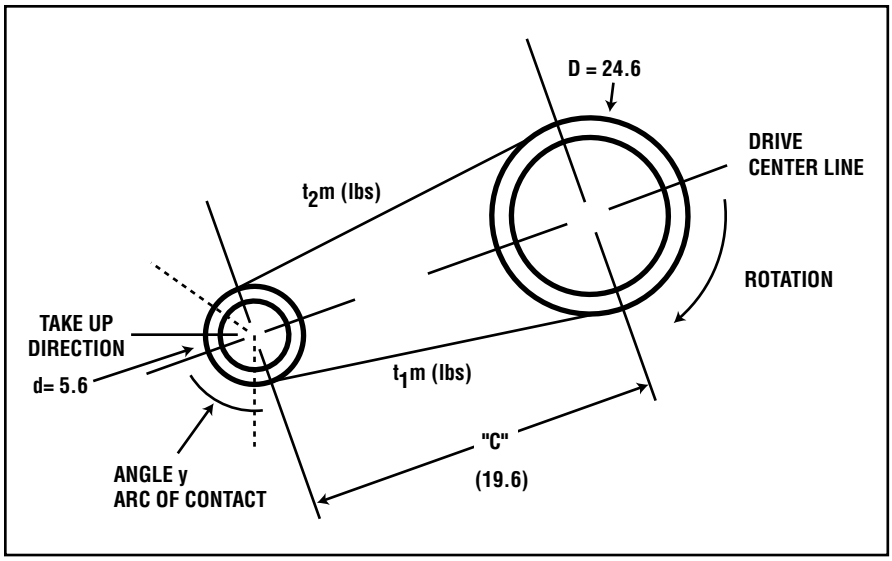

Figure 29

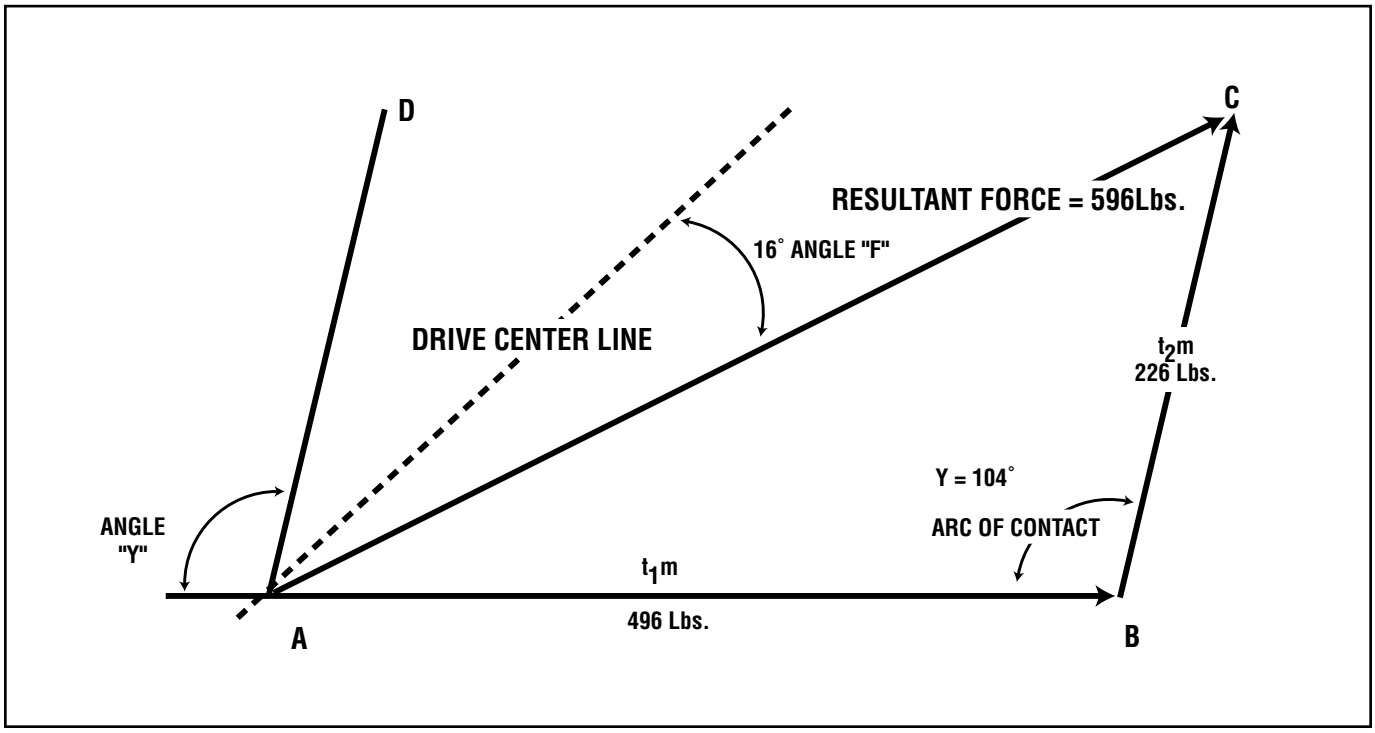

Figure 30

ELECTRIC MOTORS

Frame Assignments and Minimum Sheave Diameters

The table below lists recommendations for the minimum diameter of sheaves to be used on general purpose electric motors. The purpose of these recommendations is to prevent the use of sub-minimum diameter sheaves. Shaft or bearing damage can occur (due to increased belt pull) when a sheave that is too small in diameter is used. In the table below, NEMA frame assignments and minimum diameter recommendations are listed. For special applications other than general purpose AC motors not covered by NEMA standards, consult the motor manufacturer.

Table 35 Electric Motor Frames and Minimum Diameters

Frame No.	Shaft Diameter (inches)	Horsepower at Synchronous Speed (rpm)				Power-Wedge & Super Power-Wedge	Aramax Super II Super Blue Ribbon
		3600(3450)*	1800(1750)*	1200(1160)*	900(870)*	Minimum Outside Diameter	Minimum Datum Diameter
143T	0.875	1½	1	¾	½	2.2	2.2
145T	0.875	2-3	1½-2	1	¾	2.4	2.4
182T	1.125	3	3	1½	1	2.4	2.4
182T		5	—	—	—	2.4	2.6
184T	1.125	—	—	2	1½	2.4	2.4
184T		5	—	—	—	2.4	2.6
184T		7½	5	—	—	3.0	3.0
213T	1.375	7½-10	7½	3	2	3.0	3.0
215T	1.375	10	—	5	3	3.0	3.0
215T		15	10	—	—	3.8	3.8
254T	1.625	15	—	7½	5	3.8	3.8
254T		20	15	—	—	4.4	4.4
256T	1.625	20-25	—	10	7½	4.4	4.4
256T		—	20	—	—	4.4	4.6
284T	1.875	—	—	15	10	4.4	4.6
284T		—	25	—	—	4.4	5.0
286T	1.875	—	30	20	15	5.2	5.4
324T	2.125	—	40	25	20	6.0	6.0
326T	2.125	—	50	30	25	6.8	6.8
364T	2.375	—	—	40	30	6.8	6.8
364T		—	60	—	—	7.4	7.4
365T	2.375	—	—	50	40	8.2	8.2
365T		—	75	—	—	8.6	9.0
404T	2.875	—	—	60	—	8.0	9.0
404T		—	—	—	50	8.4	9.0
404T		—	100	—	—	8.6	10.0
405T	2.875	—	—	75	60	10.0	10.0
405T		—	100	—	—	8.6	10.0
405T		—	125	—	—	10.5	11.5
444T	3.375	—	—	100	—	10.0	11.0
444T		—	—	—	75	9.5	10.5
444T		—	125	—	—	9.5	11.0
444T		—	150	—	—	10.5	—
445T	3.375	—	—	125	—	12.0	12.5
445T		—	—	—	100	12.0	12.5
445T		—	150	—	—	10.5	—
445T		—	200	—	—	13.2	—

*Approximate full load speeds

OVERHANG EFFECT ON BEARING LOAD

Introduction

Machine designers would generally make a vector addition of shaft weight to the belt resultant force, and then calculate the effect of overhang on the bearings. (The total bearing load would, of course, depend also upon the components of the driven machine, but the portion due to the belt drive can be found.)

If T represents the total force due to the belt drive, the loads A and B in the diagrams below will vary with the position of the sheave on the shaft.

Overhung Load

When a sheave is mounted beyond a bearing (Figure 31), the bearing load will increase with the amount of overhang. Moving the sheave closer to the bearing decreases the bearing load.

$$\text{Load B} = \frac{T(X + Y)}{X} \qquad B = \frac{1000 \times 24}{18} = 1333 \text{ lbs.}$$

$$\text{Load A} = \frac{T \times Y}{X} \qquad A = \frac{1000 \times 6}{18} = 333 \text{ lbs.}$$

(If the overhang is decreased from 6″ to 3″, the load at B decreases to 1167 lbs.)

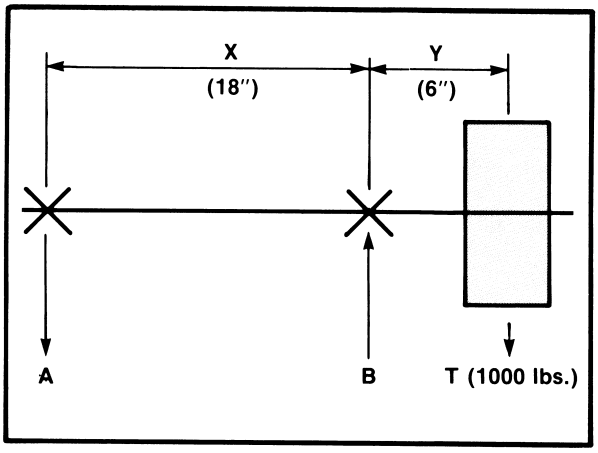

Figure 31
Overhung Load

OVERHANG EFFECT ON BEARING LOAD

(Continued)

Outboard Bearing — Load

When the sheave is between bearings (Figure 32) the load T is divided between the bearings.

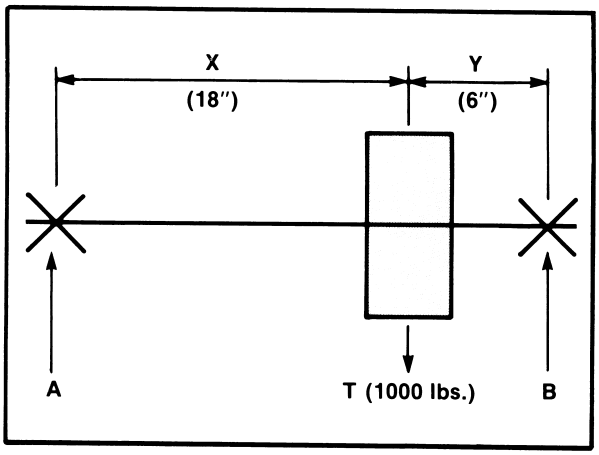

Figure 32

Outboard Bearing

$$\text{Load B} = \frac{T \times X}{X + Y} \qquad B = \frac{1000 \times 18}{24} = 750 \text{ lbs.}$$

$$\text{Load A} = \frac{T \times Y}{X + Y} \qquad A = \frac{1000 \times 6}{24} = 250 \text{ lbs.}$$

Drives that are designed and installed with consideration given to the following points will minimize bearing loads:

1. Arc of Contact. More arc of contact (longer centers) reduces the tensions and belt pull resultant force.
2. Belt Speed. Higher belt speeds (larger sheave diameters) also reduce tensions. They also minimize the number of belts on drive (less overhang).
3. Proper Tensioning. Following recommended tensioning procedure will insure adequate but not excessive tension is obtained.

FLYWHEEL EFFECT

Introduction

The flywheel effect of a sheave (WR^2) equals the weight of the sheave rim in pounds multiplied by the mean radius, in feet, squared or

Flywheel Effect = $W \times R^2$

Where W = net weight of sheave rim, in pounds

R = mean radius of sheave, in feet

1. To find the net weight of the sheave rim in pounds (W), refer to sheave sizes tables on pages 235 to 261 to find the net weight of the sheave. Multiply the total weight of the sheave by the factor in Column B of Table 36 below.
2. To find the mean radius (R) of the sheave, in feet,

   (a) Subtract from the pitch diameter of the sheave (D) in inches the amount shown in Column A of Table 36. This gives the mean diameter, in inches.

   (b) Divide the mean diameter found in (a) by 24 to obtain the mean radius (R) in feet.
3. Using W, found in No. 1 above, and R from No. 2(b) above, find the Flywheel Effect of sheave by applying the formula: Flywheel Effect = $W \times r^2$

Torque Required to Accelerate or Decelerate a Flywheel

Torque required to uniformly accelerate or decelerate a flywheel can be found from the following formulas:

$$\text{Torque (in. lbs.)} = \frac{.03908 \times N \times W \times R^2}{t}$$

$$\text{Torque (ft. lbs.)} = \frac{.003257 \times N \times W \times R^2}{t}$$

Where N = difference between initial and final rpm

W = Net weight of sheave rim, in pounds

R = mean radius of sheave, in feet

t = time required to effect speed change, in seconds

Table 36
Flywheel Effect of Sheaves

Sheave Groove Cross-Section	Column A Mean Diameter Equals Datum/Pitch Diameter Minus	Column B Rim Weight Equals Net Sheave Weight Multiplied By
A-B*	.55″	.65
B	.35″	.65
C	.60″	.65
D	.65″	.65
3V	.33″	.65
5V	.55″	.65
8V	.90″	.65

*Use “B” datum diameter

STATIC CONDUCTIVE V-BELTS

Requirements for V-Belt Drives in Potentially Explosive Environments

Under certain conditions of temperature and humidity, a V-belt drive may generate a significant potential of static electricity. Belts intended for operation in potentially dangerous atmosphere can be constructed with a relatively low electrical resistance characteristic. It has become common practice to specify and refer to such belts as “static conductive.”

A standard method for determining the static conductivity of a V-belt is described below. This method involves the passage of an electrical current of specified voltage through a section of a belt and then measuring the belt’s resistance to conduct this current.

Test Method

The test apparatus should be an electronic-type ohmmeter with a nominal open circuit voltage of 500 volts, and having a range from 0 to 10 megaohms with an accuracy of ± 5%.

The electrodes consist of two 0.625 inch diameter flat metal brass contacts. Tests are conducted at room temperature of 70 ± 10˚ F and a relative humidity of 60 ± 10%.

The belt and contact surfaces must be wiped with a clean, dry cloth.

The test procedure consists of the following:

1. Moisten the electrodes and apply to **only** the driving surfaces of the belt. The electrodes are positioned on 8.5 inch centers, or 180˚ on any belt having a length of 20 inches or less.

2. Apply a force of 12.5 lbs. per contact.

3. Measure the resistance between the electrodes using the ohmmeter described above.

A resistance reading greater than 6 megaohms will constitute failure of this test. Testing has demonstrated that the dissipation provided by belts having a resistance of 6 megaohms or less (when new and measured as above) is sufficient to prevent measurable static voltage. This provides only for the static charge generated by the belts and sheaves (pulleys). Belts on such drives must be kept reasonably free from any encrusted accumulation of nonconducting extraneous material. In addition, all elements of the drive must be interconnected and grounded to earth.

This test method can also be applied to Poly-Rib and synchronous belts. For the Poly-Rib belts, the measurement is made on the rib sidewalls on both sides of the belt. For synchronous belts, the measurement is made on the flank or driving surface of the tooth.

Carlisle Brand	Belt Type	Static Dissipating
Super Blue Ribbon	AP, BP, CP, DP	✔
Gold-Label Cog-Belt	AX, BX, CX, DX	✔
Super II	A, B, C	✔
Super Power-Wedge	3V, 5V, 8V	✔
Power-Wedge Cog V-Belt	3VX, 5VX	✔
Super Vee-Brand	RB, RC, RD	✔
Gold-Label Cog-Band V-Belt	RBX, RCX, RDX	✔
Wedge-Band	R3V, R5V, R8V	✔
Double-Angle	AA, BB, CC	Special Order
Poly-Rib	J, L, M	Special Order
Connector	A, B, C, D	Special Order
Durapower II	3L, 4L, 5L	Special Order
GPL	L3, L4, L5	No
Thoro-Link	O, A, B, C	No

V-BELT STORAGE METHODS

The storage of V-belts is of interest to users and distributors as well as manufacturers. Under favorable storage conditions, good quality belts retain their initial serviceability and dimensions. Conversely, unfavorable conditions can adversely affect performance and cause dimensional change. Good storage facilities and practices will allow the user to achieve the most value from belt products.

V-belts should be stored in a cool and dry environment with no direct sunlight. When stacked on shelves, the stacks should be small enough to avoid excess weight on the bottom belts which may cause distortion. When stored in containers, the container size and contents should be sufficiently limited to avoid distortion, particularly to those belts at the bottom of the container.

Some things to avoid:

Do not store belts on floors unless a suitable container is provided. They may be susceptible to waterleaks or moisture or otherwise damaged due to traffic.

Do not store belts near windows which may permit exposure to sunlight or moisture. Do not store belts near radiators or heaters in the air flow from heating devices.

Do not store belts in the vicinity of transformers, electric motors, or other electrical devices which may generate ozone. Also avoid areas where evaporating solvents or other chemicals are present in the atmosphere.

Methods of Storage

V-Belts

A common method of storing belts is to hang them on pegs or pin racks. Very long belts stored this way should use sufficiently large pins or crescent-shaped “saddles” to prevent their weight from causing distortion. Long V-belts may be “coiled” in loops for easy distortion-free storage. The following guide provides information for the maximum number of coilings of V-belts for extended storage.

Maximum Number of Coilings of V-Belts for Storage

Belt Cross Section	Belt Length (inches)	*No. of Coils	No. of Loops
3L, 4L, A, AP, AX, AA 5L, B, BP, BX, 3V	Under 60 60 up to 120 120 up to 180 180 and over	0 1 2 3	1 3 5 7
BB, C, CP, CX 5V	Under 75 75 up to 144 144 up to 240 240 and over	0 1 2 3	1 3 5 7
CC, D, DP	Under 120 120 up to 240 240 up to 330 330 up to 420 420 and over	0 1 2 3 4	1 3 5 7 9
8V, E	Under 180 80 up to 270 270 up to 390 390 up to 480 Over 480	0 1 2 3 4	1 3 5 7 9

*One coil results in three loops, two coils result in five loops, etc.

V-BELT STORAGE METHODS

(Continued)

Joined V-Belts, V-Ribbed Belts, Synchronous Belts

Line V-belts, these belts may stored on pins or saddles with precautions taken to avoid distortion. However, belts of this type up to approximately 120 inches are normally shipped in a “nested” configuration and it is recommended that the belts be stored in this manner as well. Nests are formed by laying a belt on its side on a flat surface and placing as many belts inside the first belt as possible without undue force. When the nests are tight and are stacked with each rotated 180˚ from the one below, they may be stacked without damage.

Belts of this type over approximately 120 inches may be “rolled up” and tied for shipment. These rolls may stacked for easy storage. Care should be taken to avoid small bend radii which could damage the belts.

Variable Speed Belts

Variable speed belts are more sensitive to distortion than most other belts and it is not recommended that these belts be hung from pins or racks. They should be stored on shelves. A common method for packaging for shipment is the use of a “sleeve” slipped over the belt. Variable speed belts should be stored in these sleeves and may conveniently be stacked on shelves with the aid of the sleeves.

Effects of Storage

The quality of belts has not been found to change significantly within eight years of proper storage at temperatures less than 85˚ F (30˚ C), and relative humidity below 70%. Also there must be no exposure to direct sunlight.

If the storage limit is increased beyond 85˚ F (30˚ C), then the storage limit for normal service expectancy should be reduced. From a base of eight years at 85˚ F (30˚ C), the storage limit should be reduced by one-half for each 15˚ F (8˚ C) increase in temperature. Under no circumstances should belts be exposed to storage temperatures above 115˚ F (46˚ C).

With a significant increase in humidity, it is possible for fungus or mildew to form on stored belts. This does not appear to cause serious belt damage, but should be avoided if possible.

Humidity, plus storage, may be more important to the length of the belt than to its residual service life, because certain fibers commonly used for the strength member of V-belts are relatively prone to storage shrinkage. No industry-wide figures are available, but shrinkage is related to humidity of the ambient atmosphere and to storage time.

Equipment using belts is sometimes stored for prolonged periods (six months or more) before it is put into service or during other periods when it is idle. It is recommended that the tension on the belts be relaxed during such periods and that equipment storage conditions should be consistent with the guidelines for belt storage. If this is not possible, the belts should be removed and stored separately.

The manufacturing process commonly called “curing” is intended to bring raw material to an optimum point of hardness and tensile strength. Cure beyond this point (and cure continued, although at a reduced rate) tends to reduce the tensile strength and increase the hardness. Thus, an unrelaxed belt may take a compression “set” in protracted storage. Although this may not significantly affect the service life, it may contribute to a rough, unsatisfactory drive.

It follows, of course, that provision must be made to retension the drives before the equipment is reactivated after storage.

OIL AND CHEMICAL RESISTANCE OF V-BELTS

In general, the presence of oil or chemicals in contact with a belt drive system can materially affect the life span and operational characteristics of the system. The concentration of the chemical or the oil involved, length and type of exposure, choice of the belt type used, and environmental conditions such as heat and humidity, all contribute to the rate and degree of effect on the performance and deterioration.

Two effects may be noted when belts are exposed to oil and/or chemicals. The most obvious is a swelling or increase in dimensions of the cross section so that they no longer fit the sheave or pulley groove properly. Less apparent at casual observation, is the deterioration of the original physical properties, which includes adhesion between the belt components. If the degree of swelling and/or loss of physical properties is significant, the life of the belt will be substantially shortened.

The above effects may be brought about by a large variety of chemicals, notably oils, acids, and solvents.

No one synthetic rubber is resistant to all of these. Some compounds may be excellent for one chemical, but poor for another, and only adequate for still another.

Because of this, all stock belts manufactured by RMA member manufacturers are constructed to be reasonably oil and chemical resistant. The nature of the compounds and/or belt construction may minimize swelling and deterioration. Occasional splattering by oils and greases does not usually adversely affect standard belts. The automotive fan belt is a typical example.

In addition, there are a great many chemicals, such as gasoline, which swell rubber or extract ingredients from the belt rubber compounds. These may cause embrittlement, cracking or swelling of the belt, which results in deterioration of performance.

It is not practical to categorize the materials which may deteriorate belts without getting involved in the chemistry of each. The problem is further complicated by proprietary formulations of petroleum and chemical manufacturers. The formulation of these is often unknown and the only real test of satisfactory belt performance is a careful laboratory study. Belt compounds vary from manufacturer to manufacturer. Usually, those which are specified as oil resistant will withstand moderate attack from most commonly used oils and solvents. If the drive is subjected to an accumulation of a considerable amount of oil and grease on the belt, it may preclude the use of a V-belt or a v-ribbed belt.

It is assumed that where there is an available large presence of oil, a V-belt will not have to operate under these conditions. Synchronous belts are not substantially affected by the loss of friction coefficient and are capable of operation under these conditions. Depending on the drive and the nature of the oil, it may be possible to use a synchronous belt submerged in oil. Consult Carlisle for recommendations.

As can be seen from the above, there are many variables. However, the following general guidelines might be of use in selecting a belt drive system subjected to a chemical environment.

1. Prevent the accumulation of contaminants.
2. If the belts are to be subjected to only occasional contamination contact, a standard construction Vee or synchronous belt can be used.
3. If the belts are expected to give long, trouble-free operation on an industrial drive, and they are in contact with oil or exposed to an atmosphere laden with chemicals or solvents, consult Carlisle for recommendations.

HEAT RESISTANCE OF V-BELTS

It is difficult to give a quantitative definition of heat resistance in power transmission belts due to the wide variations encountered in various applications, type of belt used, and degree of maintenance provided. In addition, length of exposure, users' expectations regarding service life and the presence of other factors (such as chemicals) which might accelerate the effects of temperature, all add to the complexity of such a definition.

In many cases, heat resistant V-belts are specified when they are not required. A decision to use such a special belt is very often controlled by numerous considerations. The user should review the various type of belts available from stock, as well as requirements of the particular application, before resorting to special belts.

In order to better understand the above statements, it might be well just to briefly mention some of the more influential factors involved:

1. Excessive heat, from any source, is the single biggest deterrent to any dynamic rubber product. It accelerates progressive curing which results in the rubber becoming hard and brittle. This, in turn, results in cracks arising from the components to relieve the stress of flexing.
2. Ozone added to heat, accelerates deterioration still further.
3. Heat is generated both internally and externally when a belt is in motion. A high local ambient temperature adds to the heat exposure.
   (a) Internal heat is created by constant flexing of the components.
   (b) High ambient temperatures increase both internal and external heat.

Anything that can be done to reduce these factors will improve belt life and drive efficiency. Some methods for accomplishing this will be discussed later. All stock power transmission belts manufactured by member of the RMA, are made of materials compounded for good resistance to heat. Following are some guidelines:

1. As a general rule, for every 35˚ F (20˚ C) increase in prolonged ambient temperature, above 85˚ F (30˚ C), belt life will be reduced by 1/2. However, short periods of ambient temperature of above 85˚ F are not likely to cause a measurable reduction in belt life.
2. Belts of special constructions, to counter the effects of high temperatures, can be obtained on a made-to-order basis.
3. Each type of power transmission belt has its own characteristics of heat build up. An ambient temperature might exceed the range for one type of belt but be well within the range of others.
4. The amount of maintenance provided is extremely important — slippage, due to lack of tensioning, can generate substantial heat.
5. The operating temperature of all belt types will reach a level balanced by the airflow cooling effect. The temperature of all belt types will climb to a level where the increase is balanced by the airflow cooling effect. In other words, the belt will not continue to get hotter, but its temperature will eventually level off at a point where airflow will dissipate the additional heat build up.
6. Belt operating temperature is a function of:
   (a) sheave or pulley diameter
   (b) load being transmitted
   (c) belt flex rate
   (d) belt type/belt construction
   (e) maintenance procedures, including proper installation, initial and periodic retensioning
   (f) ambient temperature
   (g) airflow cooling effect
7. Methods of improvement. Drives operating in ambient temperatures over 140˚ F (60˚ C) should be referred to Carlisle for recommendations.
   (a) Use the largest pulley possible consistent with space limitation and economics, as this:
      1. Reduces internal heat build up, due to small radius bending.
      2. Reduces belt tension and bearing load.
      3. Increases airflow cooling effect.
   (b) Follow proper maintenance and installation procedures for the belt. V-belts and V-ribbed belts require a run-in period and retensioning to remove residual stretch and to insure proper seating.
   (c) Readjust tension periodically.
   (d) Allow for ventilation in the guard design, use forced ventilation of finned sheaves if necessary.

HORSEPOWER RATING FORMULAS FOR CARLISLE V-BELTS

$$HP = dr\left[K_1 - K_2/d - K_3(rd)^2 - K_4 \log(dr)\right] + K_5 r\left[1 - (1/K_{SR})\right]$$

Where:

HP = base horsepower rating per belt
(must be corrected for specific belt length — see C_L

d = datum or effective diameter in inches

r = rpm of faster shaft divided by 1000

K_1, K_2, K_3, K_4, & K_5 = constants from table below

K_{SR} = speed ratio factor from formula

$$C_L = 1 + \left[\frac{\log L - \log L_0}{\log L0 + 0.58}\right] \qquad K_{SR} = \frac{1}{1 + \frac{1}{2.6} \log\left[\frac{1 + 10^x}{2}\right]}$$

Where:

L = specific belt effective length (inches)

L_0 = base belt length (inches)

See table for cross section.

Where:

$$X = -2.6\left[\frac{SR - 1}{SR}\right]$$

SR = speed ratio

Corrected HP rating per belt = HP(basic) x C_L

Cross Section	K_1	K_2	K_3	K_4	K_5	L_0
AP	1.3948	2.6198	2.9043E-04	0.27041	2.4572	70.1
A, AK	1.4075	2.4572	2.3633E-04	0.30986	2.4572	70.1
AX	1.4206	1.9869	1.0382E-04	0.39908	2.4572	70.1
BP	2.2149	5.8478	4.7867E-04	0.41948	4.5928	91.8
B, BK	2.1002	4.5928	4.5747E-04	0.44010	4.5928	91.8
BX	1.9992	3.0509	3.9570E-04	0.50430	4.5928	91.8
CP	3.6653	13.7060	8.1326E-04	0.66836	10.7083	148.2
C, CK	3.4964	10.7093	7.6693E-04	0.68551	10.7083	148.2
CX	3.3397	7.0294	6.3582E-04	0.73563	10.7083	148.2
DP, DX	6.7891	39.3520	1.5676E-03	1.18980	39.3520	240.0
3V	1.2036	1.9040	2.0685E-04	0.17634	1.9040	63.0
3VX	1.1691	1.5295	1.5229E-04	0.15960	1.5295	63.0
5V	3.3140	10.124	5.8758E-04	0.46527	10.124	125.0
5VX	3.3038	7.781	3.6432E-04	0.43343	7.781	125.0
8V, 8VX	8.6628	49.323	1.5804E-03	1.16690	49.323	250.0

Note: Minor variations may exist between the calculated values of horsepower using the formulas presented above and those given in the tables within this manual. Calculation simplifications have been used in some instances.

USEFUL FORMULAS

Calculating Belt Sizes and Center Distances

The industry formula for calculating length (L) is as follows:

Formula No. 1

$$L = 2C + 1.57(D + d) + \frac{(D - d)^2}{4C}$$

Where:

L = belt length
C = center distance
D = large sheave diameter
d = small sheave diameter

The formula for calculating center distance (C) is as follows:

Formula No. 2

$$C = \frac{b + \sqrt{b_2 - 32(D - d)_2}}{16}$$

Where $b = 4(L) - 6.28(D + d)$

When either the center distance or belt length is known, the appropriate formula can be used to determine the other. In drive design, however, selection of the center distance is frequently flexible. In such cases, shorter center distances generally result in overall drive economy, and the following rule gives a satisfactory short "approximate center distance."

APPROX. C = D + d + d, or APPROX. C = D, whichever is larger.

Whether the center distance is known from drive requirements or selected by the above rule, it is necessary to proceed as follows to obtain correct belt size and actual center distance with that standard belt size.

1. Calculate belt length from the chosen center distance.
2. Select the standard belt size nearest to the calculated belt length.
3. Calculate the actual center distance obtained with the selected standard belt.

These calculations have been simplified by the use of a table of factors that are accurate and easy to use. See Table 29 on page 287.

To find belt length (L) and the nearest standard belt size form center distance and sheave diameters:

1. Calculate $\frac{D - d}{C}$
2. Find Factor M opposite $\frac{D - d}{C}$ in Table 29.
3. Then $L = \frac{2C}{M} + 1.57\,(D + d)$
4. Refer to the stock belt length tables and select the nearest standard size belt. (Note it's length.)
5. The actual center distance (C) is then calculated for this standard belt size as follows.

To find center distance (C) when sheave diameters and belt size are known:

1. Calculate trial center distance (C_t) from formula:

Formula No. 3

$$C_t = \frac{L - 1.57(D + d)}{2}$$

Where L = length of standard size belt

2. Calculate Factor $A = \frac{C_t}{D - d}$
3. Find Factor B opposite Factor A in Table 29.
4. Then C = Factor B x C_t

USEFUL FORMULAS

Formulas for Determining HP

Sometimes the load requirement for a drive is given in terms of torque rather than HP. Torque can be converted directly to HP by means of the following formulas for designing drives. It is important to remember, however, that the torque at one shaft is not mixed with the rpm of the other shaft.

Formula No. 4

$$\text{HP} = \frac{(\text{Torque, lb.-inches})(\text{rpm})}{63{,}025}$$

Formula No. 5

$$\text{HP} = \frac{(\text{Torque, lb.-feet})(\text{rpm})}{5{,}252}$$

When accurate data is not available on HP drive requirements, it is possible to calculate power output from a driveR machine or required input to a driveN machine. In the following formulas, efficiency must be known or estimated.

Formula No. 6 Power from the Motor

$$\text{Horsepower} = \frac{(\text{volts})(\text{amps})(\text{p.f.})(\text{eff})}{Z}$$

Where: eff = overall mechanical and electrical efficiency
p.f. = power factor
Single phase: Z = 746
Three phase: Z = 431

Formula No. 7 Power from the Motor

$$\text{Horsepower} = \frac{(\text{volts})(\text{amps})(\text{eff})}{746}$$

Where: eff = overall mechanical and electrical efficiency

Formula No. 8 A.C. Machinery

$$\text{Kilowatts} = \frac{(\text{volts})(\text{amps})(\text{p.f.})}{Y}$$

Where: p.f. = power factor
Single phase: Y = 1000
Three phase: Y = 577

Formula No. 9 D.C. Machinery

$$\text{Kilowatts} = \frac{(\text{volts})(\text{amps})}{1000}$$

Formula No. 10 Power for a Generator

$$\text{Horsepower} = \frac{(\text{volts})(\text{amps})}{(746)(\text{eff})}$$

Where: eff = overall mechanical and electrical efficiency

Formula No. 11 Power for an Alternator

$$\text{Horsepower} = \frac{(\text{volts})(\text{amps})(\text{p.f.})}{(Z)(\text{eff})}$$

Where: eff = overall mechanical and electrical efficiency
p.f. = power factor
Single phase: Z = 746
Three phase: Z = 431

USEFUL FORMULAS

Formula No. 12 Power Required by Pumps (Hyd. Machinery)

$$\text{Horsepower} = \frac{(Q) \times (P)}{(1714)(\text{eff})}$$

Where: Q = flow rate, gal/min
P = discharge pressure for pumps, inlet pressure for turbines, lb/sq in
eff = overall mechanical and hydraulic efficiency

Formula No. 13 Power From a Wheel or Turbine

$$\text{Horsepower} = \frac{(Q)(P)(\text{eff})}{1714}$$

Where: Q = flow rate, gal/min
P = discharge pressure for pumps, inlet pressure for turbines, lb/sq in
eff = overall mechanical and hydraulic efficiency

Formulas for Determining V-Belt Tension

Because of the critical factors tensioning plays in V-belt life as well as other drive components, there are several exacting formulas for tensioning V-belts. The following formulas will assist in proper tensioning of drives.

Formula No. 14

$$T_1 - T_2 = 33{,}000 \left(\frac{HP}{V}\right)$$

Where: T_1 = tight side tension, pounds
T_2 = slack side tension, pounds
HP = design horsepower
V = belt speed, feet per minute

Formula No. 15

$$T_1 + T_2 = 33{,}000\ (2.5 - N)\left(\frac{HP}{NV}\right)$$

Where: T_1 = tight side tension, pounds
T_2 = slack side tension, pounds
HP = design horsepower
V = belt speed, feet per minute
N = arc of contact correction factor (factor in Table 29)

Formula No. 16

$$T_1 / T_2 = \frac{1}{1 - 0.8N} \quad (\text{Also, } t_1 / t_2 = e^{k\theta})$$

Where: T_1 = tight side tension, pounds
T_2 = slack side tension, pounds
N = arc of contact correction factor (factor in Table 29)
e = base of natural logarithms
k = 051230 a constant for V-belt drive design
θ = arc of contact in radians

Formula No. 17

$$T_1 / T_2 = \left(\frac{HP}{V}\right)$$

Where: t_1 = tight side tension, pounds
HP = design horsepower
V = belt speed, feet per minute

USEFUL FORMULAS

Formula No. 18

$$T_2 = 33{,}000\,(1.25 - N)\left(\frac{HP}{NV}\right)$$

Where: T_2 = slack side tension, pounds
HP = design horsepower
V = belt speed, feet per minute
N = arc of contact correction factor (factor in Table 29)

Other Formulas

Formula No. 19

$$\text{Design HP} = \text{HP} \times \text{Service Factor}$$

Formula No. 20

$$\text{Speed Ratio} = \frac{\text{rpm of faster shaft}}{\text{rpm of slower shaft}}$$

Formula No. 21

$$\text{Belt Speed (fpm)} = \frac{(\text{PD of either sheave})(\text{rpm of same sheave})}{3.82}$$

Formula No. 22

$$\text{Arc Length} = \frac{\pi}{3.60} \times \text{Arc of Contact} \times \text{Diameter of Small Sheave}$$

Formula No. 23

$$\text{Arc of Contact (small sheave)} = 180 - \frac{(D - d)(60)}{(C)}$$

USEFUL FORMULAS

Conversion Factors

	Multiply	By	To Obtain
Length	Meters Meters Inches Feet Millimeters	3.281 39.37 0.254 .3048 .0394	Feet Inches Meters Meters Inches
Torque	Newton-Meter Lb-Ft Lb-In Lb-Ft	.7376 1.3558 .0833 12.00	Lb-Ft Newton-Meter Lb-Ft Lb-In
Rotation	RPM RPM Degrees/Sec. Rad/Sec.	6.00 .1047 .1667 9.549	Degrees/Sec. Rad/Sec. RPM RPM
Moment of Inertia	Newton-Meters^2 Oz-In^2 Lb-In^2 Slug-Ft^2 Oz-In-Sec.^{2} Lb-In-Sec^2	2.42 .000434 .00694 32.17 .1675 2.68	Lb-Ft^2 Lb-Ft^2 Lb-Ft^2 Lb-Ft^2 Lb-Ft^2 Lb-Ft^2
Power	Watts Lb-Ft/Min HP HP Watts Kilowatts Kilowatts Tons (A/C) Tons (A/C) HP HP	.00134 .0000303 746 33000 .001 1000 56.88 200 12000 550 2545	HP HP Watts Lb-Ft/Min Kilowatts Watts BTU/Min BTU/Min BTU/Hour Lb-Ft/Second BTU/Hour
Temperature	$^\circ$C = ($^\circ$F - 32) x 5/9	$^\circ$F = ($^\circ$C x 9/5) + 32	

Horsepower / Speed / Torque Relationships		
HP	**Speed (rpm)**	**Torque**
Constant	Increases	Decreases
Constant	Decreases	Increases
Increases	Constant	Increases
Decreases	Constant	Decreases
Increases	Increases	Constant
Decreases	Decreases	Constant

V-BELT DRIVE TROUBLESHOOTING GUIDE

PROBLEM	POSSIBLE CAUSE	SOLUTION
Belts Mismatched	Mixed old and new belts.	Replace with new set.
	Drive misaligned.	Belts will be progressively looser from one side to the other. Realign drive.
	Worn or improperly machined pulley.	Belt will ride at different positions in pulley groove. Replace with new sheaves.
	Belts undertensioned.	Rotate drive to get all belt slack on bottom side. Retension to proper level.
Belts Stretch Too Much	Insufficient take-up.	Provide necessary take-up.
	Overloaded.	Re-design with larger pulleys or more belts.
	Belt tension is too high.	Re-tension to proper level.
	Impossible to provide adequate take-up.	Provide additional take-up with idler or increase number of belts.
Belts Slip	Drive undertensioned.	Re-tension to proper level.
	Drive Overloaded.	Re-design with larger sheaves or more belts.
	Pulleys worn (belt bottoms in groove).	Replace pulleys.
	Excessive oil or grease on drive.	Excessive oil/grease reduces belt grip in pulley. Provide better shielding on drive.
Belts Break	Improper belt installation.	Belt levered overpulley. Install new belt properly.
	Insufficient belt tension.	Belts whipped on start-up or under shock. Re-tension.
	Shock loads.	Drive underbelted or undertensioned. Check drive design.
Belts Jump Grooves	Drive misaligned.	Check and realign.
	Belts undertensioned.	Re-tension to proper level.
	Idler not located properly.	Consult Application Engineering.
	Center distance varies.	Use heavier: shafting/machine framework; or use deep groove pulleys.
	Excessive whip and vibration.	Shorten center distance or add idler.
	Interference.	Provide guard to prevent foreign objects from entering drive.
Belt Vibration	Resonant condition.	Change center distance considerably or; increase or decrease number of belts or; add idler to break up resonant condition.
	Pulsating loads.	Increase tension or increase flywheel effect in driven pulley.
	Pulleys not balanced.	Provide dynamically balanced pulleys.
	Framework or shafting too light.	Re-design or reinforce with additional supports or bearings.
Belts Check Crazed or Cracked	Belts slipping.	Increase tension.
	Excessive heat.	Provide adequate ventilation. Check slippage.
	Pulley or idler too small.	Increase diameters.
	Chemical attack.	Provide adequate protection.
Belts Wear Rapidly	Belt hitting guard/frame.	Provide sufficient clearance.
	Pulleys Worn.	Replace or Re-machine.
	Overloaded drive.	Check drive design and increase pulley diameters or number of belts.
	Dirt and grit entering drive.	Provide shielding or guards.

GLOSSARY OF BELT INDUSTRY TERMINOLOGY

ambient temperature: the temperature of the atmosphere surrounding the object under consideration.

anti static: having the capability of furnishing a path for the flow of static electricity. Specially constructed for potentially hazardous (explosive) environments. Also called static conductive, static dissipating, static safe, static resistant.

arc of contact: the circumferential portion of a pulley which is engaged by the belt. Also called pulley wrap.

ASTM: American Society for Testing and Materials.

automatic take-up: a mechanical device for maintaining the proper tension in a belt by automatically compensating for belt stretch or shrinkage in service.

backlash: in synchronous drive systems, the amount by which the tooth space of a sprocket exceeds the tooth thickness of the mating belt along the pitch circles. It is the necessary clearance for proper mesh between belt teeth and pulley grooves.

bare back: the textile face of an article which is free of any rubber coating. Carlisle Aramax belts are an example of bareback construction.

base gum: the rubber compound forming the narrower trapezoidal portion of a V-belt adjacent to but below the tension number.

belt drive: an assembly of one or more belts, sheaves or pulleys and the means for securing the sheaves or pulleys to shafts, for the purpose of transmitting motion, power or materials from one point to another.

belt fastener: a device for holding the ends of open end belting together.

bolt hole circle: that perimeter along which the center of bolt holes in a flange face are distributed.

bottom clearance: the radial distance between the bottom of a V-belt and the lower end of the straight sidewall portion of a grooved sheave.

brand: a mark or symbol identifying or describing the product and/or manufacturer, may be either embossed, inlaid or printed.

BS: British Standard.

BTS: bored to size, refers to shafts bores in sprockets and pulleys.

bushing: a metal lining or sleeve used in sheaves and pulleys to adapt sheave or pulley rims to many different shaft sizes. Bushings facilitate installation and removal of sheaves or pulleys, and often provide greater gripping power on the shaft.

center distance: in belt drives, the distance from the center of one terminal pulley to the center of the opposite terminal pulley. Also called center-to-center or centers.

classical: For V-belts classical refers to the trapezoidal cross sections such as A, AX, AP, B, BX, BP, etc.
For synchronous belts classical refers to the trapezoidal tooth configurations of MSL, XL, L, H, XH and XXH belts.
Carlisle Synchro-Dog Timing Belts are examples of classical timing belts.

curvilinear: refers to the parabolic or rounded tooth profile products such as Carlisle's Synchro-Cog RPP, Synchro-Cog RPP Plus and Synchro-Cog Panther. These are high torque transmitting tooth profiles which represent the latest evolution of synchronous belt products.

cogged V-belt: a V-belt with a series of evenly spaced indentations in the inner face. These indentations increase the belt flexibility and are not cogs which mate with a sprocket tooth. Also called notched V-belt.

cold resistant: the ability to withstand the effect of a specified cold or low temperature without loss of service-ability.

compound: the mixture of rubber and other materials which are combined to give the desired properties when used in the manufacture of a product.

compression section: that part of a V-velt beneath the pitch plane, undergoing compression as the belt bends around the sheave or pulley.

corrected horsepower rating: the horsepower rating of a belt after taking into account all correction factors, such as speed ratio, arc of contact, and belt length.

cover: the outer part of the belt usually intended to protect the product.

crowned pulley: a pulley with greater diameter at center than at the edges.

cut edge: the uncovered edge of a laminated belt, created by cutting after vulcanization. Also called raw edge.

date code: any combination of numbers, letters, symbols or other methods used by a manufacturer to identify the period of manufacture of the product.

design horsepower: an equivalent power used for design purposes, which compensates for the extra life taken out of a belt during those times that it operates above the average horsepower requirement. It is the required horsepower times the service factor.

differential driving: in multiple V-belt drives, the slip caused by differences between the belt and the sheave groove as well as between V-belt lengths.

dielectric strength: the measure of a product's ability to resist passage of a disruptive discharge produced by an electric stress.

DIN: Deutsches Instit fur Normung. German organization which specifies standards.

double V-belt: a belt, the cross section of which is in the general form of a hexagon; also called hexagonal V-belt. Carlisle Double Angle V-belts available in sections AA, BB, and CC are examples of this type of belt.

driven: the sprocket or pulley located on equipment being driven by the power source or prime mover.

driver: the sprocket or pulley located on the motor or prime mover.

GLOSSARY OF BELT INDUSTRY TERMINOLOGY

dual drive: a belt driving system employing two adjacent, powered pulleys each with its own motor.

durometer: an instrument for measuring the hardness of rubber. Measures the resistance to penetration (without puncturing) of the indentor into the surface of the rubber.

durometer hardness: an arbitrary numerical value which measure the resistance to indentation of the blunt indentor point of the durometer. Value may be taken immediately or after a very short specified time.

effective outside length: in V-belts, the length as obtained by adding the effective outside circumference of one measuring sheave to twice the center distance between two equal diameter measuring sheaves at a specific measuring tension. This term is sometimes shortened to effective length.

effective pitch length: In V-belts, the belt length as obtained by adding the effective pitch circumference of one measuring sheave to twice the center distance between two equal diameter measuring sheaves at a specified measured tension. This term is usually shortened to pitch length.

effective tension: the difference between tight side tension and slack side tension. It is the portion of the total tension effective in actually moving a loaded belt. It is often referred to as “horsepower pull”.

face: the outer surface of a pulley.

flanged pulley: a pulley with a raised or projecting rim at the edge or edges, usually for the purpose of keeping the belt on the pulley.

fleeting angle: the angle of entry of a V-belt into the plane of a sheave groove.

floating idler pulley: a pulley which can move in space (due to gravity, a spring or other forces) in order to maintain relatively constant tension in that specific strand of the belt.

FRAS: fire-resistant anti-static.

Gilmer drive: A sychronous drive. In the late 1940’s a sewing machine application provided the impetus for the invention of timing belts by Richard Case, an engineer associated with the L.H. Gilmer Company.

groove angle: the included angle formed by a hypothetical extension of the sheave groove sidewalls to a point of intersection.

groove edge spacing: the linear distance between the center of the first (or last) groove and the nearest outer edge of the sheave rim.

groove top width: the distance from one side of a sheave groove to the other at the top of the straight sidewall portion of the groove. The value of the distance is specified in standards.

heat resistance: the property or ability of rubber articles to resist the deteriorating effects of elevated temperatures.

Idler/idler pulley: a non-powered pulley, sheave, sprocket or wheel around which a belt travels.

inside length: the belt length as measured along its inside circumference.

installation allowance: the amount by which the center distance can be shortened so that the belts can be installed without damage.

inverter: a term commonly used for an AC adjustable frequency drive.

ISO: International Standards Organization.

jacket: In V-belts, the outside covering of a wrapped construction type belt. For synchronous belts jacket refers to the fabric on the face of the belt teeth.

jackshaft: Intermediate pulley arrangement between driver and driven for change of speed or direction.

joined V-belt: two or more V-belts joined together into one unit by means of a connecting band across the top of the individual V-belts.
Carlisle Gold Label Cog-Band, Wedge-Band, Wedge-Band Chipper Drive and Super-Vee are examples of this type of belt.

matched set: In V-belts, a group of belts within the length variation permitted for use together on a drive.

MPB: minimum plain bore. Refers to pulleys or sprockets. They can be rebored as needed.

MTO: Made-To-Order. A non-stock item.

NEMA: National Electrical Manufacturers Association. A non-profit organization organized and supported by manufacturers of electrical equipment and supplies. Some of the standards NEMA specifies are HP ratings, speeds, frame sizes and dimensions, torques and enclosures.

nominal: a value assigned for the purpose of convenient designation, existing in name only.

oil swell: the change in volume of a rubber article resulting from contact with oil.

open end V-belt: a V-belt made from a cut length of V-belt by joining the two ends with a fastener.

operating tensions: the tensions of the different strands of a belt (such as tight and slack side tension) when it is transmitting power, as distinguished from the tensions when it is standing still or running without transmitting power.

outside diameter eccentricity: the degree to which a sheave or pulley is out of round with respect to its center of rotation.

pitch: In synchronous belts, the distance between teeth as measured from the center of one tooth to the center of the next tooth.

pitch length: in sychronous belts, the belt length determined by multiplying the belt pitch by the number of teeth in the belt.

prime mover: the source of power supply to a system, such as an electric motor or an internal combustion engine.

QD: quick detachable, refers to QD bushings which fit in QD pulleys and sprockets.

GLOSSARY OF BELT INDUSTRY TERMINOLOGY

quarter turn drive: a belt drive in which the axis of the driver and driven sheaves or pulleys are at right angles to each other.

raw edge: the uncovered edge of a laminated belt, created by cutting after vulcanization. V-belt construction type that has not outside the cover on the belt edges which come into contact with the sheave grooves. Also called cut edge.

required horsepower: the power used to find the design horsepower; usually the rating of the prime mover at its rated speed, but can also be the average horsepower.

RGA: Returned Goods Authorization.

ride-position: the radial distance from the top of a belt in a sheave groove to the outside diameter (usually effective) of the sheave. Ride-out is plus ride position, ride-in is minus ride-position. (For double V-belts the center of the belt is used, rather than the top, for checking ride position.)

RMA: Rubber Manufacturers Association.

roll belting: belting made to ordered width but of specified lengths for cutting into shorter lengths. Also called open-end belting.

RPM: revolutions per minute.

rubber: a material that is capable of recovering from large deformations quickly and forcibly and can be, or already is, modified to a state in which it is essentially insoluble (but can swell) in boiling solvent such as benzene, methyl ethyl ketone, and ethanol-toluene azeotope. A rubber in its modified state, free of diluents, retracts within one minute to less than 1.5 times its original length after being stretched at room temperature (18 to 29C) to twice its length, and held for one minute before release.

safety factor: the ratio of ultimate strength of a belt to a safe allowable or working stress on which to base design procedures. Safety factors are included in the design of power transmission components and provide the margin of safety in a machine component. Not to be confused with “service factors” which equalize service life.

service factor: a multiplier applied to the required horsepower (or torque) of a drive to determine the design horsepower (or torque). It compensates for the extra life taken out of a belt during those times which it operates above the required horsepower (or torque).

service level: in V-belts, the relative expected belt life, based on specific design horsepower.

sheave: (pronounced “shiv”) a grooved wheel designed to accomodate one or more V-belts. Also called grooved pulley, or pulley.

shock load: a stress created by a sudden force. It is the load seen by a belt in a system which transmits high peak loads. This type of load is present in crushers, separators, grinders, conveyors, winches, cranes, etc.

speed ratio: Ratio of slower pulley to faster pulley, can be ratio of pitch diameters, RPM, or for synchronous drives, number of teeth.

speed-up drive: A drive in which the driver pulley is of greater diameter than the driven pulley.

speeding tension: that tension necessary to accelerate a loaded belt from rest to normal operating speed and is in addition to operating tension.

starting torque: the torque exerted by the motor during the starting period.

static conductive: having the capability of furnishing a path for the flow of static electricity. (See anti-static)

straight face pulley: a pulley on which the face is a straight cylindrical drum, i.e., uncrowned.

synchronous: a term used to describe power transmission utilizing toothed belts in mesh with grooved sprockets.

synchronous belt: a belt, the cross section of which is in the general form of a rectangle, but with transverse formed teeth extending from the lower base at regularly spaced intervals. The teeth engage with mating axial grooves in the drive pulleys, Carlisle Synchro-Cog Panther, Synchro-Cog RPP Plus, and Synchro-Cog Timing belts are all examples of synchronous belts. Also called timing belt.

S-Z twist: In synchronous belts, refers to the direction of tensile cord twisting to obtain a neutral tracking characteristic during operation. Standard construction in all Carlisle stock synchronous belts.

tandem drive: a belt driving system, usually with a single driving motor, employing two adjacent, powered pulleys interconnected by gearing.

teeth: the portion of a synchronous belt that meshes with the pulley grooves.

tensile member: the part of a belt which resists the imposed tensions. It is usually cord or fabric arranged in a symmetrical pattern, parallel to the circumference of the belt. Fiberglass, aramid fiber, polyester, and steel are some examples of materials typically used as tensile members. Polyester is used in most V and V-ribbed belts while fiberglass is used in most synchronous belts.

timing belt: see synchronous belt.

variable speed V-belt drive: a drive using a V-belt having a relatively larger nominal top width in proportion to its nominal thickness, using sheaves which have one or both sides movable in order to change the diameter at which the belt operates, and thus the rotational speed of the driven shaft.

V-belt: a belt, the cross section of which, is in the general form of an isosceles trapezium.

V-belt drive: a belt drive using V-belts and grooved sheaves or pulleys. The profiles of the belts and of the grooves are such that the belts contact only the sides of the grooves.

vertical drive: a drive with the driver and driven shafts in a vertical plane. In synchronous drives, vertical drive sprockets normally require bottom flanges enabling the belt to stay on the drive.

VFD: variable frequency drive (see inverter)

wrapped: V-belt construction type that has outside fabric wrapped completely around the belt with no rubber or cord exposed.

BRAND NAME INTERCHANGE

Belt Type	**Ca.rlisle**	Browning	Bando	Dodge	Gates	Goodyear	Thermoid	MBL	Optibelt	T.B. Wood's
Classical Multiple (A, B, C, D)	**Super Blue Ribbon/ Super II**	Super Grip-Belt	Power King	Sealed Life II	Hi-Power II	HY-T	Prime Mover	Conventional	VB	Sure-Grip Premium
Classical Cogged Multiple (AX,BX,CX,DX)	**Gold Ribbon Cog**	Gripnotch	Power King Cog	Dyna-Cog II	Tri-Power Molded Notch	Torque-Flex	Prime Mover Cogged	Triplex	Super TX M=S	Torque-Flex II
Narrow Multiple (5V, 8V)	**Super Power-Wedge**	358 Gripbelt	Power Ace	Dyna-V	Super HC	HY-T Wedge	Maxi-Power	Maxstar Wedge	SK	Ultra-V
Narrow Cogged Multiple (3VX,5VX,8VX)	**Power-Wedge Cog**	358 Gripnotch	Power Ace Cog	Dyna-V Cog	Super HC Molded Notch	HY-T Wedge Cog	Maxi-Power Cogged	Maxstar Wedge Supreme	Super TX M=S	Ulta-V Cog
Classical Banded (RB, RC, RD)	**Super Vee-Band**	Gripband	Power King Combo	Sealed Life II Polyband	Hi-Power II Power-Band	HY-T Torque Team	Prime Mover Banded	Conventional Banded	KB	Premium V-Band
Classical Cogged Banded (RBX,RCX,RDX)	**Gold Ribbon Cog Band**	N/A	N/A	N/A	N/A	Torque Team Cogged	Prime Mover Cogged Banded	Triplex Banded	N/A	Cog-Flex Banded
Narrow Banded (R3V,R5V,R8V)	**Wedge Band**	358 Gripband	Power Ace Combo	Dyna-V Polyband	Super HC Power Band	HY-T Wedge Torque Team	Maxi-Power Banded	Maxstar Wedge Banded	KB	Ultra-V Band
Double-V Hexagonal (AA,BB,CC,DD)	**Double Angle**	Double-V Gripbelt	Double V	Double-V Hex Sealed Life II	HI-Power-II Dubl-V	HEX	Double V	Double	DK	Double-V (Hex)
Variable Speed ???-6136V)	**Variable Speed Cog-Belt**	V-S Belt	Power Max	Wide Range	Multi-Speed	Variable Speed	Variable Speed	Vari-Star	VX	Variable Speed
V-Ribbed (H, J, L, M)	**Vee-Rib**	Poly-V	Poly-V	Poly-V	Micro-V	Poly-V	Multi Ribbed	Ribstar	RB	N/A
Synchronous Timing (MXL,XL, L,H, XH, XXH)	**Synchro-Cog Timing**	Gearbelt	Synchro-Link	Dyna-Sync	Power Grip	Positive Drive	Grip-Tite Timing	Synchrostar Timing	ZR	Timing
Dual Side Synchronous Timing (XL,L,H)	**Synchro-Cog Dual Timing**	Double Gearbelt	Synchro-Link Double-Sided	Dual Dyna-Sync	Power Grip Twin Power Timing Belt	Dual Positive Drive	N/A	Dual Timing Belt	N/A	Twin Power
Synchronous Parabolic Profile (5M, 8M, 14M)	**Synchro-Cog RPP/HPR**	N/A	N/A	N/A	Power Grip GT HTD	HPPD	RPP	N/A	Optibelt-HTD	RPP
Dual Side Synchronous Parabolic	**Synchro-Cog Dual RPP**	N/A	N/A	N/A	N/A	N/A	N/A	N/A	N/A	Twin Power RPP
(8M, 14M) Open End Connector (A, B, C, D)	**Connector**	Griproll	N/A	Open End	Easy Splice	Open End	Open End	Quick-Set Open End	DE	Open End
Link-Segmented (A, B, C)	**Thoro-Link**	Griplink	N/A	Flexlink	Supreme V-Link	N/A	V-Link	N/A	N/A	Sure-Link
Light-Duty (FHP) 93L, 4L, 5L)	**Durapower II**	FHP	Duraflex GL Duraflex GL Cog (2L)	FHP Sealed Life	Truflex	FHP	N/A	FHP	LD	Light-Duty
Medium Light Duty (L3, L4, L5)	**XDV 38, 48, 58**	N/A	N/A	Lawn & Garden	PoweRated	Insta-Power	Power Plus	Super KB	N/A	Light-Duty Premium

Contact for belt types not represented here.